FRAME JOINING KITS A-T-O

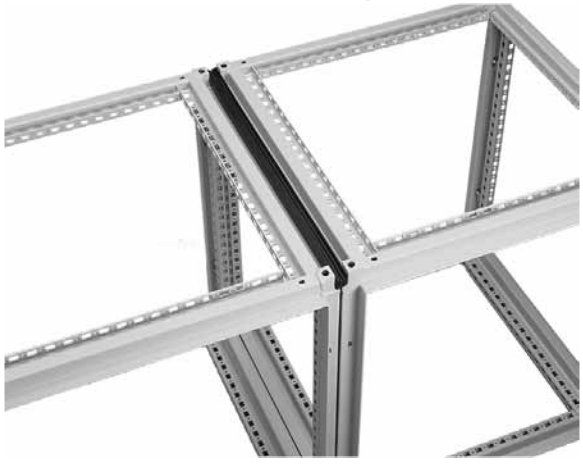

Permits joining two enclosure frames while maintaining an environmental seal.

Side-to-Side Joining Kit consists of six frame nuts and screws, as well as gasket material to maintain a dust-tight and water-tight seal between ganged frames. Can be used if rack angles are not in the front or rearmost positions or if a subpanel is not in the rearmost position.

Alternate Joining Kit consists of three standoffs, six frame nuts and screws, as well as gasket material. This kit facilitates frame joining when rack angles are in the front or rearmost position, or if a subpanel is in the rearmost position.

Front-to-Back Joining Kit permits front-to-back joining of two single-bay enclosures. This kit does not fit 1200-mm or 1600-mm wide frames.

BULLETIN: P20, P20EM

Catalog Number	Description
PJ2F	Standard Frame Joining, Side-to-Side
PJ2FD	Standard Frame Joining, Side-to-Side, Non-gasketed
PJ2FHF2	EMC Standard Frame Joining, Side-to-Side
PJ2FF	Alternate Frame Joining, Side-to-Side
PJ2FBF	Frame Joining, Front-to-Back

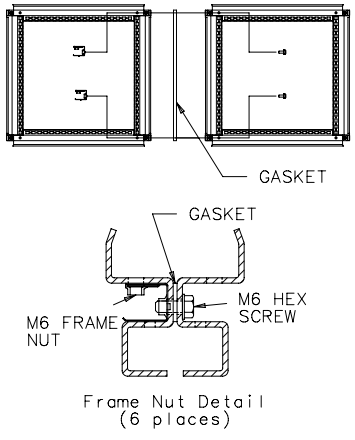

Side-to-Side

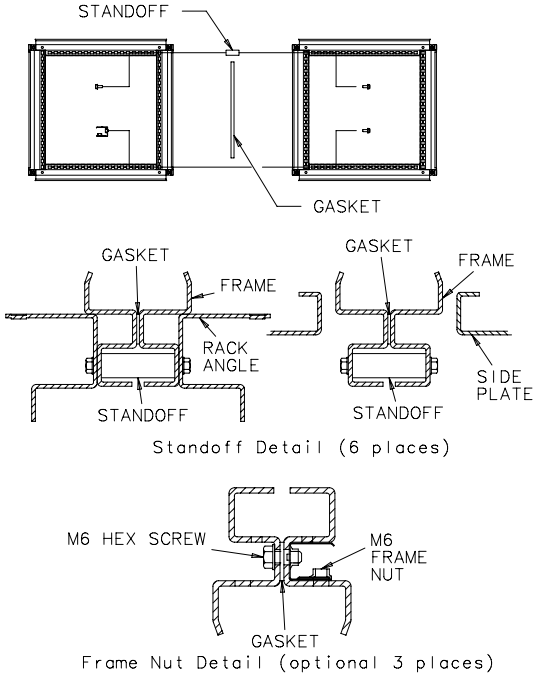

Alternate (Side-to-Side)

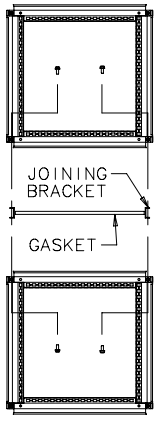

87798468

Front-to-Back

L JOINING BRACKET



The L Joining Bracket, made of 10 gauge steel, is used in conjunction with the standard joining kit as additional support. Pictured hardware is included.

BULLETIN: P20

Catalog Number	Description
PJB2F	L Joining Bracket

FRAME FEET



Four die-cast feet for use on the bottom of PROLINE™ frames that raise the frame 9 mm.

BULLETIN: P20

Catalog Number	Description
PFFM12	Frame Feet

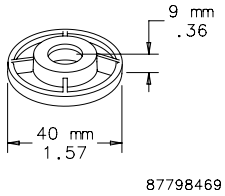

TOOL-LESS (SNAP-IN) BLANKING PANELS FOR 19-IN. RACKS

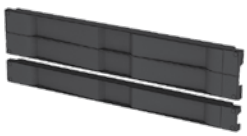

These Tool-less 19-in. Blanking Panels provide easy tool-less installation and ensure proper airflow to equipment. Made of black composite material and can be used with tapped or square EIA universal spaced rack mounting angles.

BULLETIN: DACCY

Catalog Number	Description	Rack Units	Fits	Pkg. Qty.
D19BPT1RU	Blanking Panel, 19 in.	1	19 in., universal rack spacing, tapped or square holes	10
D19BPT2RU	Blanking Panel, 19 in.	2	19 in., universal rack spacing, tapped or square holes	10

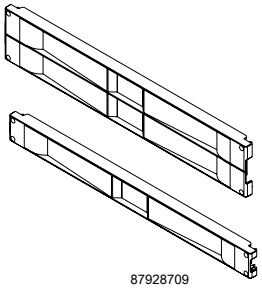

LEVELERS



Four post-type levelers allow adjustment for uneven floors. Levelers can be attached to the bottom of a frame or to a 0-mm solid base. Levelers are plated and the leveler base is capped with plastic to provide resistance to marring. Adjustable for 17-mm to 35-mm height. Ball and socket construction. Four levelers will support a maximum of 453.6 kg (1000 lb.).

BULLETIN: P20

Catalog Number	Description
PLM12	Post-type Levelers

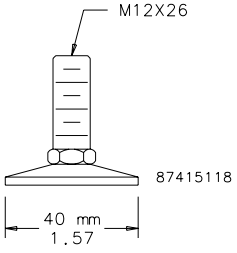

PROLINE™ FRAME FLOOR-MOUNTING BRACKET



Catalog Number	Description
PFBK	PROLINE Frame Floor-Mounting Bracket

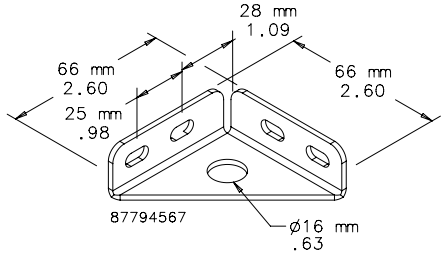

Provides a structural method of bolting a PROLINE™ frame to the floor. Fits all frame sizes. Made of 12 gauge steel with plated finish. Kit includes four brackets and mounting hardware.
Not for use on colocation frames, which include welded-in floor mounting brackets.

BULLETIN: DPY

GROUNDING BAR SYSTEM A-T-O



INDUSTRY STANDARDS

UL Component Recognized; File No. E61997

Three sizes of grounding bars and insulated mounting brackets are available. Bars are plated copper with M6 and M5 tapped holes to provide a common point for grounding equipment. Fits all enclosures if mounted vertically. See table for horizontal mounting.

BULLETIN: P20

Catalog Number	Description	Length mm/in.	Number of Holes and Screws M6	Number of Holes and Screws M5
PGS2K	Fits 400-mm deep frame front to back horizontally	200 7.87	3/5	10/10
PGS4K	Fits 600-mm deep frame front to back horizontally	400 15.75	9/11	20/20
PGS6K	Fits 800-mm deep frame front to back horizontally	600 23.62	15/17	30/31

PROLINE™ GROUNDING KIT

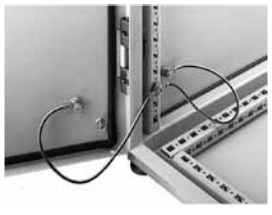

The Grounding Kit allows a PROLINE™ enclosure to be grounded to VDE specifications. Includes six 12 gauge wires 411 mm (16.19 in.) long with ring terminations and M6 mounting hardware.

BULLETIN: P9

Catalog Number	Wire Size	Length Between Ring Terminals mm/in.	Ring Terminal Hole Diameter mm/in.
PGK	12 ga.	411 16.19	7 .29

CASTER KIT A-T-O



A set of four casters (two locking, two non-locking) that mount directly to the bottom of a PROLINE™ frame, 0-mm, or 100-mm Solid Base or a Console. **(Do not use on plinth bases.)** Casters elevate the enclosure 110 mm (4.33 in.) when installed. Caster frames are plated steel with ball-bearing pivots. Caster wheels are made of a black polyamide material. Kit includes M12 mounting hardware. Order separately.
Casters Maximum Load: 1000 lb. (453 kg)
Exercise care when using casters to move the cabinet. Avoid tipping and damage to the cabinet and its contents by slowly moving the cabinet on its casters across smooth, flat flooring. Avoid:

- large cracks
- floor displacement
- seams
- gravel
- any other obstruction

Never use casters while transporting a cabinet by truck on roadways.
Contact Hoffman if further information is needed.

BULLETIN: P20

Catalog Number	Description
PC1M12	Set of 4 Casters

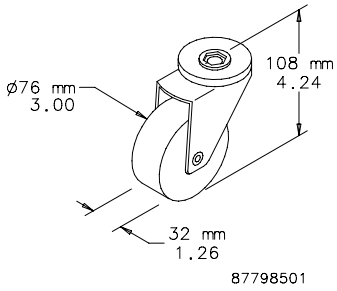

SCREW PACKAGES



Screw Packages are for mounting rack panels and equipment to rack angles.

BULLETIN: A80, DACCY, X20

Catalog Number	Color	Description	Pkg. Qty.
ES1224	Silver	12-24 x 5/8 in. combo head	20
ES1224250	Silver	12-24 x 5/8 in. combo head	250
ES1224B	Black	12-24 x 5/8in. combo head	20
ES1224B250	Black	12-24 x 5/8 in. combo head	250
ASM5	Silver	M5 x 20 mm Combo Head	20
ASM6	Silver	M6 x 16 mm combo head	20
ASM5T	Silver	M5 x 12 mm thread-forming Phillips hex head screws	20
ASM6250	Silver	M6 x 16 mm combo head	250
AS1032	Silver	10-32 x 5/8 in. combo head	20
AS1032250	Silver	10-32 x 5/8 in. combo head	250
AS1032B	Black	10-32 x 5/8 in. combo head	20

Use ASM5T on PROLINE™ frame or Net Series extruded holes.

CAGE NUT PACKAGE



Cage Nut Packages are for use with square-hole rack angles. Cage nuts are plated steel.

BULLETIN: DACCY, P20

Catalog Number	Color	Description	Pkg. Qty.
PM5CN	Silver	M5 cage nut	20
PM6CN	Silver	M6 cage nut	20
PM6CN250	Silver	M6 cage nut	250
P1032CN	Silver	10-32 cage nut	20
P1032CN250	Silver	10-32 cage nut	250
P1224CN	Silver	12-24 cage nut	20
P1224CN250	Silver	12-24 cage nut	250

MOUNTING CHANNEL



Side-to-Side

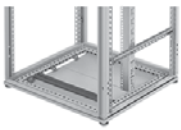

Vertical and Horizontal

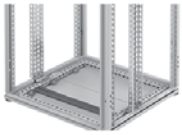

Full Height

Allows rack angles and other accessories to be positioned at any depth within the cabinet. Rails mount front to back in PROLINE™ frame. 14 gauge steel with RAL 9005 black polyester powder paint finish. Includes two rails, mounting hardware and four M6 spring nuts for mounting accessories. Use hardware kit APSM6CN (package of 20 screws, washers and spring nuts) for mounting additional rack angles or other accessories to the mounting channels.

BULLETIN: DPY

Catalog Number	Description	Fits Frame Depth
PMU8B	Mounting Channel	800
PMU9B	Mounting Channel	900
PMU10B	Mounting Channel	1000
PMU11B	Mounting Channel	1100
PMU12B	Mounting Channel	1200
APSM6CN	Mounting Channel Hardware Kit	—

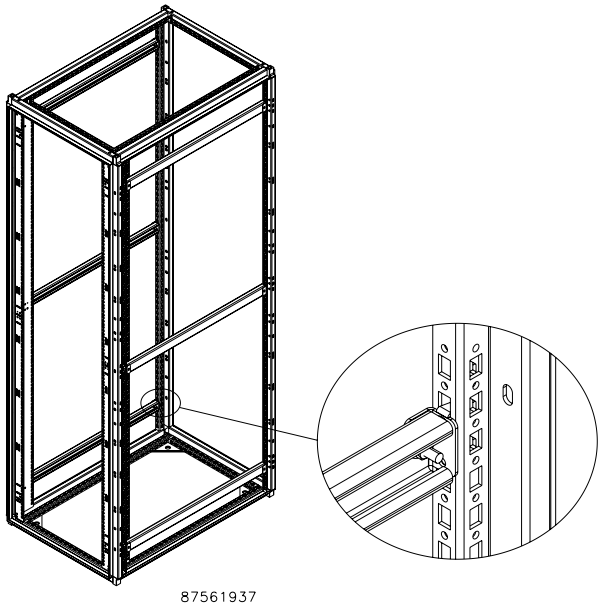

87561937

GRID STRAPS



Grid Straps are 14 gauge plated steel. They are provided with specially designed rectangular holes to allow the use of cage nuts or front-loading cage nuts. Mounting holes are provided on 25-mm centers. Grid Straps are available with either 1 row or 3 rows of holes and are furnished in pairs. Mounting hardware to attach Grid Straps to the frame or to other Grid Straps is included.

- Can be mounted front-to-back horizontally across the bottom or sides of the PROLINE™ frame
- Can be mounted left-to-right horizontally between front-to-back pairs or from the sides of the PROLINE frame
- Can be mounted vertically between horizontally mounted Grid Straps

BULLETIN: DPY, P20

Catalog Number	Hole Pattern	L (mm)	L (in.)	Fits Frame Depth	Fits Frame Width
PGH1S5	One Row	342	13.46	500	—
PGH1S6	One Row	442	17.40	600	—
PGH1S7	One Row	542	21.34	700	600
PGH1S8	One Row	642	25.28	800	700
PGH1S9	One Row	742	29.21	900	800
PGH1S10	One Row	842	33.15	1000	900
PGH1S11	One Row	942	37.08	—	1000
PGH1S13	One Row	1142	44.96	—	1200
PGH1S17	One Row	1542	60.71	—	1600
PGH3S4	Three Row	242	9.53	400	—
PGH3S5	Three Row	342	13.46	500	—
PGH3S6	Three Row	442	17.40	600	—
PGH3S7	Three Row	542	21.34	700	600
PGH3S8	Three Row	642	25.28	800	700
PGH3S9	Three Row	742	29.21	900	800
PGH3S10	Three Row	842	33.15	1000	300
PGH3S11	Three Row	942	37.08	1100	1000
PGH3S12	Three Row	1242	48.89	1200	—
PGH3S13	Three Row	1142	44.96	—	1200
PGH3S17	Three Row	1542	60.71	—	1600

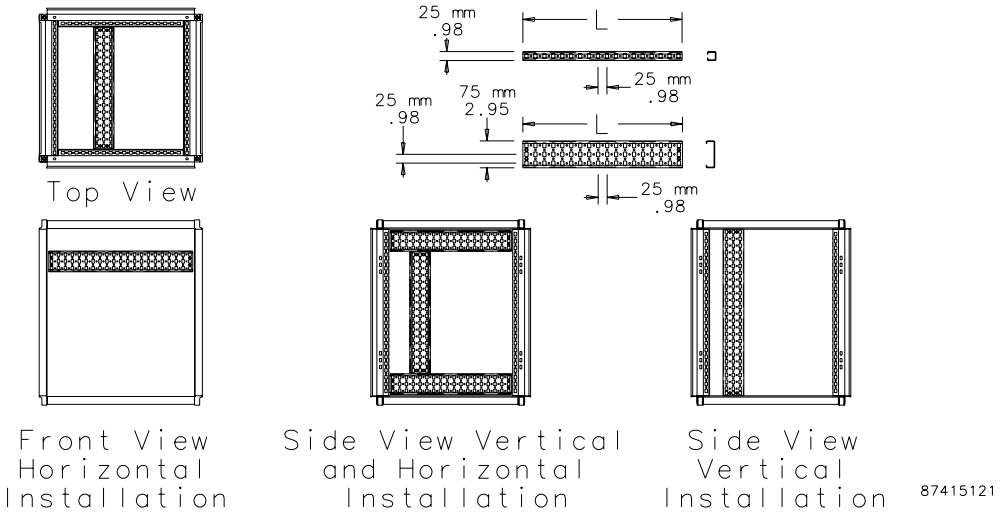

FULL-HEIGHT VERTICAL GRID STRAPS



Provide expanded vertical mounting positions. Made of plated steel. 25-mm spacing between mounting positions. Use cage nuts or front-loading cage nuts. Sold in pairs. Mounting hardware included.

BULLETIN: P20

Catalog Number	L (mm)	L (in.)	Fits Frame Height
PGH3S14V	1295	50.98	1400
PGH3S16V	1495	58.86	1600
PGH3S18V	1695	66.73	1800
PGH3S20V	1895	74.61	2000
PGH3S22V	2095	82.48	2200

PROLINE™ FASTENER PACKAGES



Use to fasten components to the grid system. PGF Packages include 20 front-loading clip nuts (M6) and 20 combination-drive washer-head bolts (M6).
Grounding Package is used with the rectangular holes in the PROLINE™ frame to provide electrical continuity between the frame and the grid system. ASM5T Package is used with PROLINE frames having round holes. Package includes 20 M5 self-tapping screws.

BULLETIN: DACCY, P20

Catalog Number	Description	Use in	Pkg. Qty.
ASM5T	M5 x 12 mm thread-forming Phillips hex head screws	Round holes	20
PGFM6	Standard Package - M6 cage nuts and bolts	Rectangular holes	20
PGFGM6	Grounding Package - M6 grounding cage nuts and bolts	Tapped holes	20

19-IN. AND 23-IN. RACK ANGLES

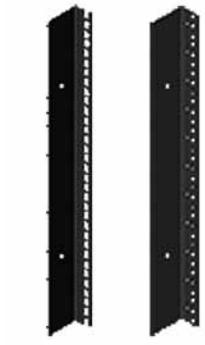

Made of 14 gauge steel with square holes or 12 gauge steel with 10-32 tapped holes. Provides 19-in. rack spacing when mounted in 600-mm wide frames, and 23-in. rack spacing when mounted in 700-mm wide frames. Use with frame reducing brackets to provide 19-in. or 23-in. spacing in 700-mm or 800-mm wide frames. Sizes available for multi-compartment colocation applications. Finish is black RAL 9005 polyester powder paint with flat finish. Furnished in pairs. The standard rack angle position is 44 mm behind the door opening.

Rack angles can be moved forward if desired. Deeper positions require the use of grid straps or mounting channels. For joining cabinets with rack angles in the full forward position, use Joining Kit PJ2FF. Shelves, drawer, guides and pull-out shelves require two sets of rack angles or frame accessory brackets installed in the frame.

For 700- and 800-mm wide cabinets, reducer or cable manager must be ordered.

BULLETIN: DPC

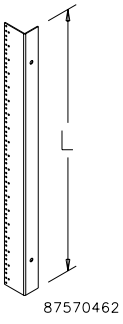

Catalog Number	Hole Type	Description (in.)	Use With	Fits Frame/Cabinet Height (mm)	Rack Units	Length (mm)	Length (in.)
PRA1912THL1	Square	19	PROLINE™ DataCom Packages	1200	24	1091	42.97
PRA1916TPL1	Tapped	19	PROLINE™ DataCom Packages	1600	33	1491	58.72
PRA1918THL1	Square	19	PROLINE™ DataCom Packages	1800	38	1691	66.59
PRA1918TPL1	Tapped	19	PROLINE™ DataCom Packages	1800	38	1691	66.59
PRA1920THL1	Square	19	PROLINE™ DataCom Packages	2000	42	1892	74.47
PRA1920TPL1	Tapped	19	PROLINE™ DataCom Packages	2000	42	1892	74.47
PRA192320THL1	Square	19 & 23	PROLINE™ DataCom Packages	2000	42	1892	74.47
PRA1921TPL1	Tapped	19	PROLINE™ DataCom Packages	2100	45	2041	80.37
PRA1921THL1	Square	19	PROLINE™ DataCom Packages	2100	45	2041	80.37
PRA1922THL1	Square	19	PROLINE™ DataCom Packages	2200	47	2091	82.34
PRA1922TPL1	Tapped	19	PROLINE™ DataCom Packages	2200	47	2091	82.34
PRA192322THL1	Square	19 & 23	PROLINE™ DataCom Packages	2200	47	2091	82.34
PRA1924TPL1	Tapped	19	PROLINE™ DataCom Packages	2400	51	2291	90.21

ADJUSTABLE RACK-MOUNTING RAILS

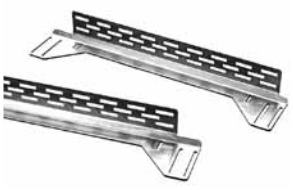

Mounting rails allow rack angles to be positioned anywhere within the PROLINE™ frame. The left-to-right adjustment pertains only when the enclosure is wider than the minimum width required for rack angles. Includes two right-hand and two left-hand 12 gauge plated or painted steel mounting rails. Mounting hardware is included.

BULLETIN: DPY, P20

Catalog Number	L (mm)	L (in.)	Fits Frame Depth	Finish
PBARA6	511	20.11	600	Plated
PBARA8	711	27.98	800	Plated
PBARA9	811	31.92	900	Plated
PBARA9B	811	31.92	900	Painted RAL 9005 Black
PBARA10B	911	35.86	1000	Painted RAL 9005 Black
PBARA11B	1011	39.79	1100	Painted RAL 9005 Black
PBARA12B	1111	43.73	1200	Painted RAL 9005 Black

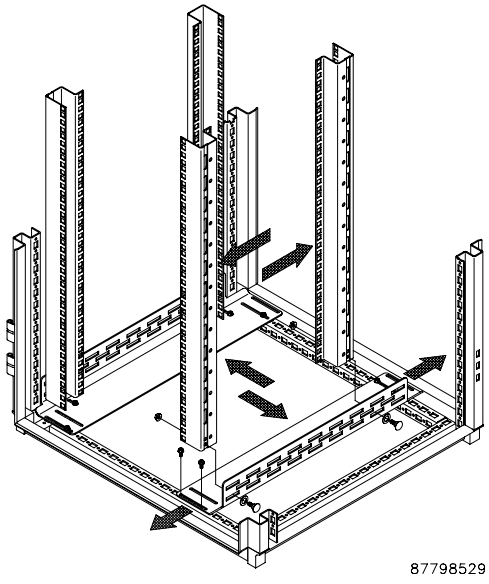

87798529

FRAME-REDUCING BRACKETS FOR FRAMES OR GRID STRAPS A-T-O

Frame-Reducing Brackets mount directly to 700- or 800-mm wide PROLINE™ frames or to grid straps. Converts wider frames to 600-mm wide, allowing 19-in. rack angles to fit, or to 700-mm wide, allowing 23-in. rack angles to fit. Can be used to left- or right-justify the rack-mounted equipment. Furnished in sets of four. 14 gauge plated steel. Mounting hardware is included.

BULLETIN: P20

Catalog Number	Reduces Frame Width	W (mm)	W (in.)	Converts Frame Width
PRB50	50	50	1.97	From 700 to 600 From 800 to 700 mm
PRB100	100	100	3.94	From 800 to 600 From 800 to 700 From 700 to 600 mm
PRB200	200	200	7.87	From 1000 to 600 From 1000 to 800 From 800 to 600 mm

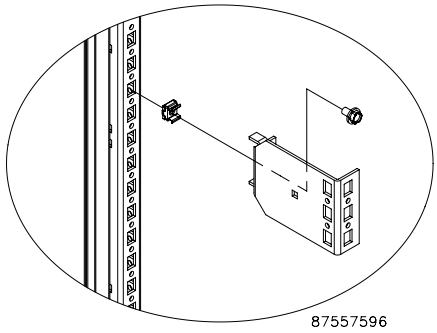

87557596

FRAME-REDUCING BRACKETS FOR FRAMES OR MOUNTING CHANNEL

Frame-reducing brackets mount directly to 700-mm or 800-mm wide PROLINE™ frames or to mounting channel. Convert wider frames to 600-mm wide, allowing 19-in. rack angles to fit, or to 700-mm wide, allowing 23-in. rack angles to fit. Can be used to left- or right-justify the rack-mounted equipment. Made of 14 gauge steel painted with flat-black RAL 9005 polyester powder. Furnished in sets of four. Mounting hardware is included.

BULLETIN: DPY

Catalog Number	Reduces Frame Width	W (mm)	W (in.)	Converts Frame Width
PMURB50	50	50	1.97	From 700 to 600, From 800 to 700
PMURB100	100	100	3.94	From 800 to 600, From 800 to 700, From 700 to 600

Frame Reducing Bracket Selection Guide

PROLINE Frame Width	Setting 19 in. Centered	Setting 19 in. Left or Right	Setting 23 in. Centered
600 mm (23.60)	No reducing brackets	No reducing brackets	—
700 mm (27.60) with grid straps	PRB50	PRB 100	No reducing brackets
700 mm (27.60) with mounting channel	PMURB50	PMURB100	No reducing brackets
800 mm (31.50) with grid straps	PRB100	PRB200	PRB50
800 mm (31.50) with mounting channel	PMURB100	—	PMURB50

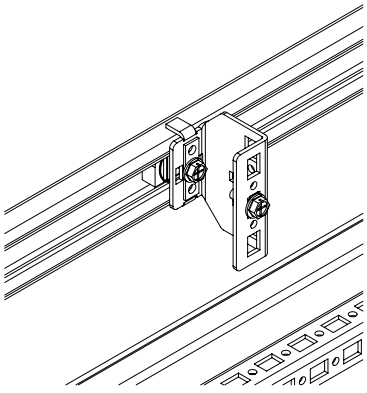

180-DEGREE HINGE KIT

A-T-O



Optional hinging for steel solid, window or disconnect doors. The 180-degree hinges provide a door opening up to 260-degrees on single-bay enclosures. These hinges mount to the door flange and have a low-profile appearance. The kit includes three hinges with textured black polyester powder paint and all necessary mounting hardware. Cannot be used on PROLINE™ FLOTEK™ or CONNECTEK™ front doors.

BULLETIN: P20

Catalog Number	Description
PH180	180-Degree Hinge Kit

DOOR-MOUNT FAN TRAY AND BLOCKING PLATE

The Door-Mount Fan Tray is used with perforated PROLINE™ doors to blow air through the perforations. Mounts to door bars. Use Blocking Plates to prevent short cycling of fans. Includes two 6-in. fans and mounting plate, two finger guards, power cord and mounting hardware.

The Blocking Plate is used with the Door-Mount Fan Tray to direct airflow and prevent short cycling. Multiple plates can be used to fill door opening and achieve desired airflow. Mounts to door bars. Includes one blocking plate and mounting hardware.

BULLETIN: DPY, DTHRM

Catalog Number	Description	Fits Door Width mm/in.	Voltage
PF06021DR6	Door-Mount Fan Tray	600	115 VAC
PBLNKDR6	Blocking Plate	600	—

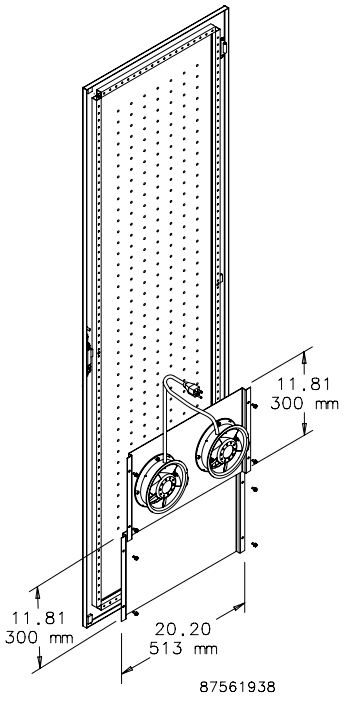

FLUSH KEYLOCKING TRIGGER LATCH WITH RANDOM KEY CODES



Flush design. Over 100 random key codes with available master. Black textured polyester powder paint finish. Includes two trigger latches with matching key code and two keys. Designed to replace locking trigger latch. For use on PROLINE™ Voice/Data and Colocation doors only.

BULLETIN: DPC

Catalog Number	Description
PTKLDC	Flush keylocking Trigger Latch with random key codes

SIDE COVER LOCK



A-T-O

Fits in pre-punched hole to secure DataCom solid side from unauthorized entry.

BULLETIN: DPC

Catalog Number	Description	Key Code
PSCLO	Side Cover Lock	2233

FLUSH SWING HANDLES



Flush Handles are optional for any solid, window or disconnect door that includes 3-point latching, except Voice/Data and Colocation cabinets. They are ergonomically designed to provide style and function in a low profile. The handle is die-cast zinc finished with RAL 9005 textured black polyester powder paint. Provision to add your logo is included. Handle can be installed to rotate either clockwise or counterclockwise.

Handle with Screwdriver Defeater
Enclosure security is provided by the integrated tool-to-open feature that releases the handle when rotated, allowing access to the enclosure.
Handle with Keylock
Keylock feature locks the handle to provide security for the enclosure. When the key is in the unlocked position, the pushbutton releases the handle to provide access to the enclosure. Two keys are furnished.
Handle for Padlock
Padlocking Handle provides security when using up to a 5/16 padlock. Pushbutton releases the handle to provide access to the enclosure.
Handle with DIN Profile Provision
DIN Flush Handle is provided with the option to add your DIN profile lock or to accept Hoffman DIN profile lock PDKL (order separately).

BULLETIN: P20

Catalog Number	Description
PFHDF	Flush Handle with Defeater
PFHKBL	Keylocking Flush Handle
PFHPBL	Padlocking Flush Handle
PFHDBL	DIN Profile Flush Handle

DIN LOCK INSERTS (FOR DIN PROFILE HANDLE ONLY)



The DIN profile keylock provides keylocking security for the Flush Swing Handle with DIN provision. Includes profile lock and two keys. Order one profile lock for each handle.
DIN Lock Kit for PROLINE™ DataCom doors includes two locks keyed alike with one of 100 different key codes and two keys (master key available).
All DIN Lock Inserts are zinc die-cast.

BULLETIN: DPY, P20

Catalog Number	Description
PKOSLFH	Slotted insert profile cylinder
PKOTM7FH	7-mm triangle insert profile cylinder
PKOSM7FH	7-mm square insert profile cylinder
PKOTM8FH	8-mm triangle insert profile cylinder
PKODBK3FH	Double-bit 3-mm insert profile cylinder
PDKL	DIN keylock, 2 keys included, key code 333
PDKLRKPR	DIN Lock Kit for PROLINE DataCom doors

DIN profile inserts are used with DIN flush swing handles. One key is included (except for slotted insert).

L HANDLE

A-T-O



The L Handle is a stylish option for any solid, window or disconnect door, except Voice/Data or Colocation cabinets. It can be installed to rotate either clockwise or counterclockwise. Handle comes with a bezel, includes keylocking provision and is finished with RAL 9005 textured black polyester powder paint. Two keys are included. The bezel permits your logo to be inserted.

BULLETIN: P20

Catalog Number	Description
PLHK	L Handle with 2 keys and logo slot, key code 333

PAGODA EXHAUST VENTS



Pagoda Exhaust Vents can be field-installed on any PROLINE™ solid top. An axial fan and finger guard are mounted in a housing. A drip-proof raised cover is removable from inside the enclosure. Gasket and mounting hardware are included. Vent housing and raised cover are 14 gauge steel finished with RAL 7035 textured light-gray polyester powder paint.

BULLETIN: P20

Catalog Number	Description	Volts
PPT1	Leadwires	115
PPT1C	Power cord	115
PPT2	Leadwires	230

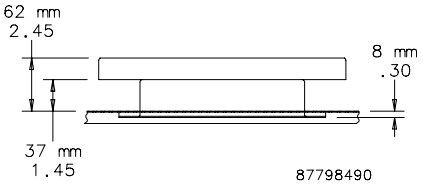

Performance Curve: 6 in. Fans

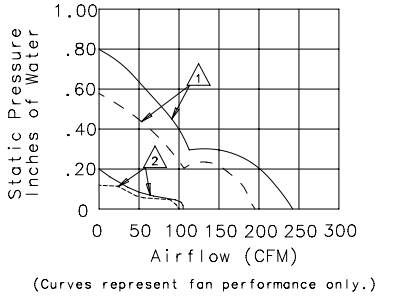

HIGH-PERFORMANCE PAGODA EXHAUST VENT

A-T-O

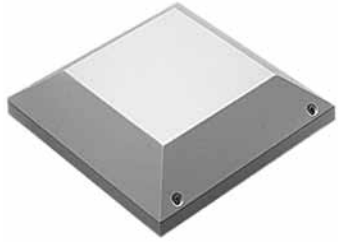

Vents fit on standard PROLINE™ top with vent cutout or can be field-installed on any PROLINE solid top. The Pagoda Vent features an integral centrifugal blower mounted in a housing that includes a drip-proof removable hood, wire mesh finger guard, perimeter gasket and terminal block. Electromagnetic-compatible (EMC) Pagoda Vents include a conductive screen, conductive gasket, line filter and 6-ft. power cord with stripped leads. Pagoda Vent housing and hood are rugged 16 gauge steel finished with RAL 7035 textured light-gray polyester powder paint. EMC vents are finished with paint over plated surfaces. Installation hardware is included.

BULLETIN: P20, P20EM

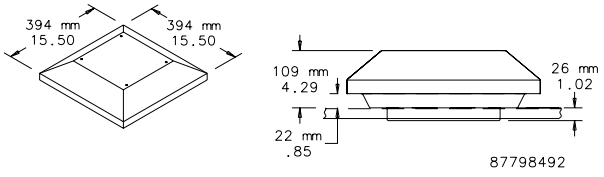

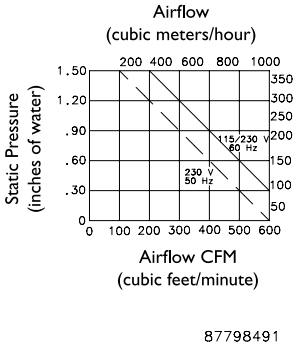

Catalog Number	Description	Voltage	Full Load Amps	Use With
PPTHP1	Leadwires	115	1.7	Top with high-performance pagoda vent cutout
PPTHP1C	Power cord	115	1.7	Top with high-performance pagoda vent cutout
PPTHP1EMC	Power cord	115	1.7	Top with high-performance pagoda vent cutout on EMC enclosures
PPTHP2	Leadwires	230	.9	Top with high-performance pagoda vent cutout
PPTHP2EMC	Power cord	230	.9	Top with high-performance pagoda vent cutout

MOBILE BASE A-T-O



Catalog Number	AxB in.	AxB mm	Fits Frame B x C (mm)
PMB66	40.91 x 23.62	1039 x 600	600 x 500 and 600 x 600
PMB69	52.72 x 23.62	1339 x 600	600 x 800 and 600 x 900
PMB86	40.91 x 31.50	1039 x 800	800 x 500 and 800 x 600
PMB89	52.72 x 31.50	1339 x 800	800 x 800 and 800 x 900

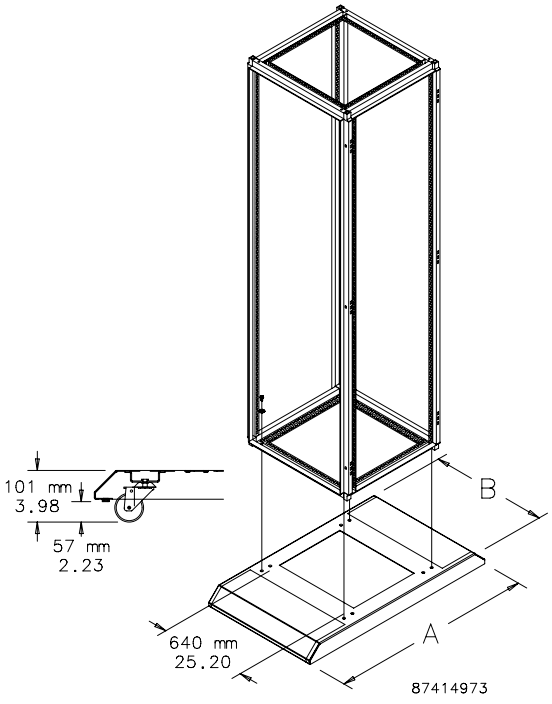

Mobile Bases fit 600- and 800-mm wide frames. They extend beyond the front and rear of 600-mm cabinets to provide enhanced stability. Provides front extension only on 800-mm cabinets. Constructed of steel finished in RAL 9005 textured black polyester powder paint. The base fastens to the underside of the frame and provides integral mounting of furnished casters. The front and rear top surfaces of the base are trimmed with black rubber mats 3-mm thick.
Casters and mounting hardware are furnished.
Four non-locking casters provide a maximum load-bearing capacity of 1000 lb. (453.6 kg).
Exercise care when using casters to move the cabinet. Avoid tipping and damage to the cabinet and its contents by slowly moving the cabinet on its casters across smooth, flat flooring. Avoid:

- large cracks
- floor displacement
- seams
- gravel
- any other obstruction

Never use casters while transporting a cabinet by truck on roadways.
Contact Hoffman if further information is needed.

BULLETIN: P20

MOBILE BASE LEVELING KIT A-T-O



Levelers mount in the outer corners of the Mobile Base, providing load-bearing capacity of 1000 lb. (453.6 kg).

BULLETIN: P20

Catalog Number	Description	Use with
PMBLM12	Mobile Base Leveling Kit	Mobile Base