Printed Circuit Board Fuses

PC-Tron® Subminiature Fuses

PC-Tron® Series

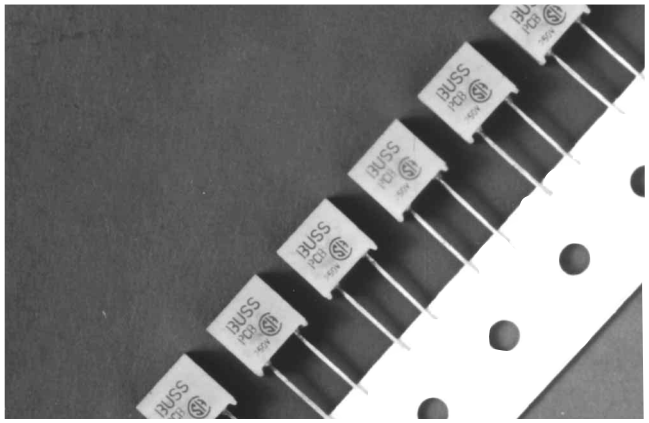

CATALOG SYMBOL: PCB, PCC, PCF, PCH, PCD, PCE, PCG & PCI
PC-TRON SUBMINIATURE FUSES

Electrical Ratings

Catalog Symbol	Amps	VAC	AC Interrupting	VDC	DC Interrupting
PCB, PCC, PCF & PCH	0.5 - 2.5	250	50A at 250V 10kA at 125V	450	300 - 5900A
PCB, PCC, PCF & PCH	2.6 - 3.0	250	50A at 250V 10kA at 125V	350	300 - 4400A
PCD, PCE, PCG & PCI	5.0	125	10kA at 125V	250	300 - 4200A

Time-Current Characteristics

Carry 100% of rating for 4 hrs. minimum. Open at 200% of rating in 10 sec. maximum.
(Non-Time-Delay. . .extremely low let-through)

Agency Approvals

PCB, PCC, PCD, PDE, PCF, PCG, PCH, and PCI — U.L. Recognized; File E19180, Guide JDYX2.

PCB, PCC, PCD, PCF, PCG, PCH, PCI, and PDE — CSA Certified; File 42731, Class 1421-01.

Dimensions and Material

Body: 0.350” x 0.350” x 0.184”; High temperature plastic.
Leads: 0.020” x 0.015” x 0.100” (short) 0.750” (full) (tape & reel) (Tin-plated copper).

Mounting Socket

Available as option. (Specify catalog number BK/PCS (100-in) and short fuse lead length — PCC or PCE)

Cold Resistance Data (10% Rated Current) Nominal Value

1/2A — 1.4Ω	3/4A — .72Ω	1A — .43Ω	1-1/2A — .24Ω
2A — .15Ω	2-1/2A — .10Ω	3A — .072Ω	5A — .023Ω

Dimensional Data: All tolerances ± .005″ / ± .13 mm

Standard Fuse (PCB, PCD) **Socket (PCS)**

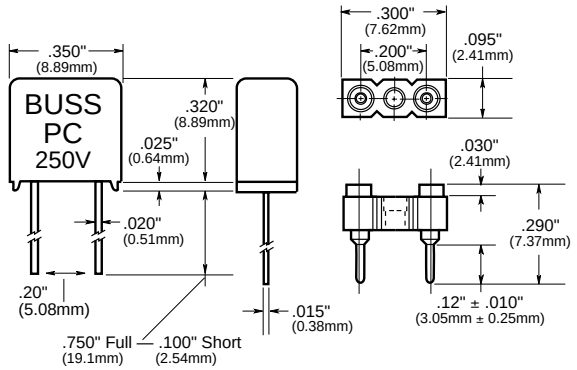

Packaging & Ordering Information:

Standard Fuse **Socket**

	PC		BK/	PCS
Packaging Code Blank—Std. Pack (5-in) **BK/** Bulk (100-in) **TR/** Tape & Reel (500-in)	**Catalog Symbol** **B -** Full lead legth. (250V) (1/2-3A) **C -** Short lead legth. (250V) (1/2-3A) **D -** Full lead legth. (125V) (5A) **E -** Short lead legth.* (125V) (5A)	**Ampere Rating** (1/2, 3/4, 1, 1-1/2, 2, 2-1/2, 3, and 5) (5A available only as PCD, PCE or PCG)	**Packaging Code** Bulk Pack (100-in)	**Catalog Symbol**

*Note—Short lead length not available in tape-and-reel packaging.
Note—Hi-Rel solderability applications should specify solder-dipped leads by adding -SD suffix to part number.

The radial lead package of the PC-Tron® is ideal for auto insertion using standard industry equipment. The 0.2” lead spacing aids ease of design. Standard wave soldering techniques will not affect the electrical performance of this unique fuse. Due to its molded construction, the device is unaffected by the board washing process. These features greatly reduce the product installation cost while increasing reliability.

The PC-Tron® is available in a wide variety of options offering flexibility to the design engineer. Available in standard pack (5-in), bulk (100-in), and tape and reel. In addition, the PC-Tron® may be ordered with short (approximately 0.10”) or long (0.75”) lead length. The tape and reel comes standard at 0.75”.

The short lead length may be used with the optional socket. The auto insertable socket allows field replacement of the PC-Tron® subminiature fuse.

CE CE logo denotes compliance with European Union Low Voltage Directive (50-1000 VAC, 75-1500 VDC). Refer to BIF document #8002 or contact Bussmann Application Engineering at 314-527-1270 for more information.

Printed Circuit Board Fuses
PC-Tron® Subminiature Fuses

PC-Tron® Series

Dimensional Data: All tolerances ± .005″ / ± .13 mm

Suface Mount Fuse (PCH, PCI)

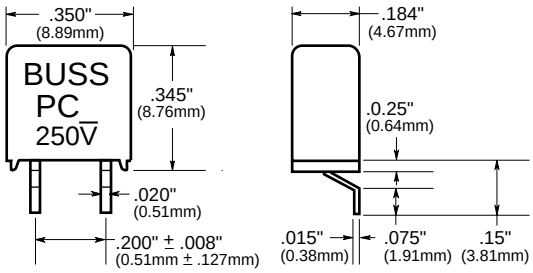

Packaging & Ordering Information:

Standard Fuse

	PC	
Packaging Code Std. — (5-in) **BK/** Bulk	**Catalog Symbol** **H** - 1/2 — 3A **I -** 5A	**Ampere Rating** (1/2, 3/4, 1, 1-1/2, 2, 2-1/2, 3, and 5) (5A available only as PCI)

Dimensional Data (PCF, PCG)

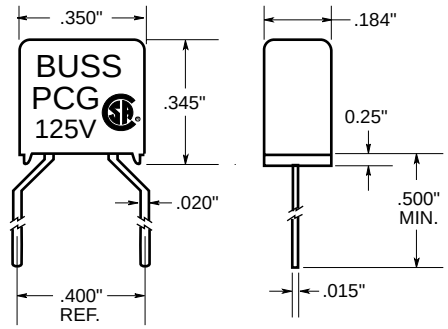

Packaging & Ordering Information:

Fuse with 0.4" Lead Spacing (contact factory for availability)

	PC	
Packaging Code Std. — (5-in) **BK/** Bulk	**Catalog Symbol** **F** - 1/2 — 3A **G -** 5A	**Ampere Rating** (1/2, 3/4, 1, 1-1/2, 2, 2-1/2, 3, and 5) (5A available only as PCG)

Max. Total Clearing I²t (Amps² Sec.)

Amp Rating	125 Volts 50A	1,000A	250 Volts 10,000A	35A & 50A
1/2A	0.006	0.006	0.006	0.006
3/4A	0.016	0.016	0.016	0.016
1A	0.020	0.020	0.020	0.020
1-1/2A	0.090	0.090	0.090	0.090
2A	0.200	0.200	0.200	0.200
2-1/2A	0.300	0.300	0.300	0.300
3A	0.750	0.750	0.750	0.750
5A	5.0	5.0	5.0	—

Note—Power Factor > .90.

Short-Circuit Performance

The PC-Tron® subminiature fuse offers short-circuit performance which until now could only be found in much larger size glass tube fuses. At 250 VAC, the 1/2 to 3 amp PC-Tron can safely interrupt 50 amperes; at 125 VAC the 1/2 to 5 amp versions can interrupt 10,000 amperes. This high interrupting capacity makes the PC-Tron subminiature fuse ideal for line-side protection of power supplies.

DC Application

The PC-Tron® subminiature fuse is UL recognized for DC supplementary overcurrent protection to provide individual protection for components or internal circuits in equipment.

The test method detailed below was chosen to emulate DC Bus application. Suitability for a specific application is dependent on time constants and capacitance values. It is the responsibility of the customer to evaluate the information provided for applicability to their particular application.

Time-Current Characteristic Curves–Average Melt

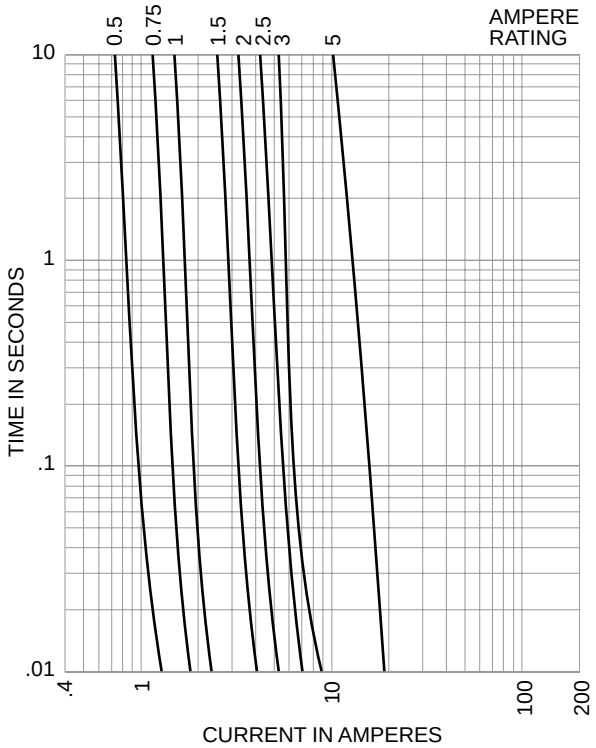

The only controlled copy of this BIF document is the electronic read-only version located on the Bussmann Network Drive. All other copies of this BIF document are by definition uncontrolled. This bulletin is intended to clearly present comprehensive product data and provide technical information that will help the end user with design applications. Bussmann reserves the right, without notice, to change design or construction of any products and to discontinue or limit distribution of any products. Bussmann also reserves the right to change or update, without notice, any technical information contained in this bulletin. Once a product has been selected, it should be tested by the user in all possible applications.