PB-Series

GFCI/ELCI & PANEL SEAL

The PB-Series, AC Residual Current Circuit Breaker with Overcurrent Protection (RCBO), combines the ground fault protection of a GFCI with the familiar overcurrent tripping characteristics of a normal circuit breaker. It utilizes the hydraulic magnetic principle which provides precise operation and performance even when exposed to extremely hot and/or cold application environments. These precision mechanisms are temperature stable and are not adversely affected by temperature changes in their operating environment. As such, derating considerations due to temperature variations are not normally required, and heat-induced nuisance tripping is avoided.





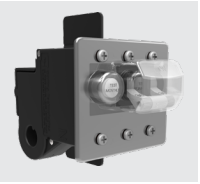



Resources:

Configure a Complete Part

Download CAD & Sales Drawing >

Product Highlights:

- Overload, short circuit and ground fault protection in a single package
- Handle or rocker style actuators
- Wiping Contacts - Mechanical linkage with two-step actuation - cleans contacts, provides high, positive contact pressure & longer contact life.
- A trip-free mechanism, a safety feature which makes it impossible to manually hold the contacts closed during overload or fault conditions.
- A common trip linkage between all poles, another safety feature, ensures that an overload in one pole will trip all adjacent poles.
- Front panel mounting
- Integral push-to-test button

Benefits:

- Increases safety around boats and marinas
- Protects against electrical shock hazards in areas near water
- Protects against defects in wires & conductors
- Reduces fire and shock hazards from defects in permanently installed appliances such as water heaters, battery chargers, lighting fixtures, etc.
- Detects lower level ground faults which do not trip ordinary circuit breakers, but can lead to fires, and shock hazards for boating occupants

Typical Applications:

- Marine
- Generators
- Lighting

Carling Technologies®
Innovative Designs. Powerful Solutions.

Carling Technologies, Inc.
60 Johnson Avenue, Plainville, CT 06062
Email: sales@carlingtech.com
Application Support: team2@carlingtech.com
Phone: 860.793.9281 **Fax:** 860.793.9231

www.carlingtech.com

Electrical Tables

Table A: UL Listed configurations and performance capabilities as Circuit Breakers.

PB-SERIES TABLE A					
Circuit Configuration	Voltage			Current Rating (Amps)	Interrupting Capacity (Amps)
	Max Rating	Frequency	Phase		
Series	120	60	1	.10 - 30	5000

Electrical

Maximum Voltage	120/240VAC 60 Hz
Current Ratings	Standard current coils: 0.100, 0.250, 0.500, 0.750, 1.00, 2.50, 5.00, 7.50, 10.0, 15.0, 20.0, 25.0 & 30.0 amps. Other ratings available, see ordering scheme.
Insulation Resistance	Minimum of 100 Megohms at 500 VDC.
Dielectric Strength	UL, CUL - 1500 V 60 Hz for one minute between all electrically isolated terminals. PB-Series circuit breakers comply with the 8mm spacing and 3750V 60 Hz dielectric requirements from hazardous voltage to operator accessible surfaces and between adjacent poles
Impedance	Values from Line to Load Terminal

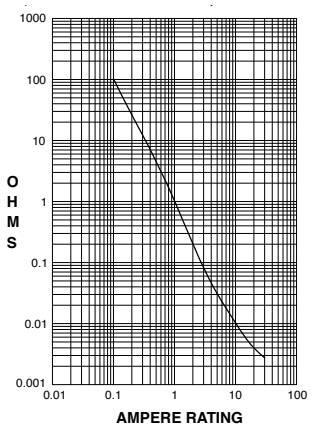

Ampere Rating

CURRENT (AMPS)	TOLERANCE (%)
0.10 - 5.0	± 15
5.10 - 20.0	± 25
20.10 - 30.0	± 35

Pulse Tolerance Curve

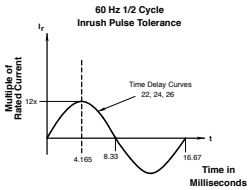

Leakage To Ground

Standard Must Trip	120/240VAC 60 Hz
Leakage Current Ratings	5 & 30 milliamps. 5± 1mA For other ratings, consult factory.
Trip Time	300 ms Max. @ 100%, 40ms Max. @ 500% of must trip leakage current.
Test Button	On unit face along side of actuator.

Mechanical

Endurance	10,000 ON-OFF operations @ 6 per minute; with rated Current & Voltage.
Trip Free	All PB-Series Circuit Breakers will trip on overload or ground fault, even when Handle is forcibly held in the ON position.
Trip Indication	The operating Handle moves positively to the OFF position when an overload or ground fault causes the breaker to trip.

Physical

Number of Poles	1 - 3 poles, where the third pole is neutral
Internal Circuit Config.	Series Trip
Weight	Approximately 65 grams/pole. (2.32 ounces/pole.)
Standard Colors	Housing- Black; Actuator - See Ordering Scheme.

Environmental

Designed and tested in accordance with requirements of specification MIL-PRF- 55629 and MIL-STD-202 as follows:

Shock	Withstands 100 Gs, 6ms, sawtooth while carrying rated current per Method 213, Test Condition "I". Ultra-short curves tested @ 90% of rated current.
Vibration	Withstands 0.060" excursion from 10-55 Hz, and 10 Gs 55-500 Hz, at rated current per Method 204C, Test Condition A. Instantaneous and ultrashort curves tested at 90% of rated current.
Moisture Resistance	Method 106D, i.e., ten 24-hour cycles @ + 25°C to +65°C, 80-98% RH.
Salt Spray	Method 101, Condition A (90-95% RH @ 5% NaCl Solution, 96 hrs).
Thermal Shock	Method 107D, Condition A (Five cycles @ -55°C to +25°C to +85°C to +25°C).
Operating Temperature	-35° C to +65° C
Corrosion	Tested FMG Test. 3 weeks @ 30°C 75% RH, 100ppb H2S, 20ppb Cl2, 200ppb NO2

Agency Certifications

UL Listed

UL Standard 489	Circuit Breakers, Molded Case, (Guide DIVQ, File E129899)
UL Standard 1077	Supplementary Protectors
UL Standard 1053	Ground Fault Sensing and Relaying Equipment

*Manufacturer reserves the right to change product specification without prior notice.

PB	B	-	B	A	-	24	-	620	-	2	B	A	-	A	G
1 Series	2 System Voltage/Poles		3 Circuit	4 Actuator		5 Frequency & Delay		6 Current Rating		7 Terminal	8 Actuator Color	9 Mounting/ Barriers		10 Trip Level	11 Agency Approval

1 SERIES
PB

2 SYSTEM VOLTAGE / POLES
A 120 VAC single phase, one pole
B 120/240 VAC single phase, two pole
C 120/240 VAC single phase with switched neutral, three pole
D 120 VAC two pole with switched neutral

3 CIRCUIT
B Series Trip (Current)

4 ACTUATOR [1]
Handle
A one per pole
B one per multipole unit
Two Color Curved Visi-Rocker
C Indicate ON, vertical legend
D Indicate ON, horizontal legend
F Indicate OFF, vertical legend
G Indicate OFF, horizontal legend
Single Color Curved Rocker
J Vertical legend
K Horizontal legend
Two Color Flat Visi-Rocker
1 Indicate OFF, vertical legend
2 Indicate OFF, horizontal legend
Single Color Flat Rocker
3 Vertical legend
4 Horizontal legend

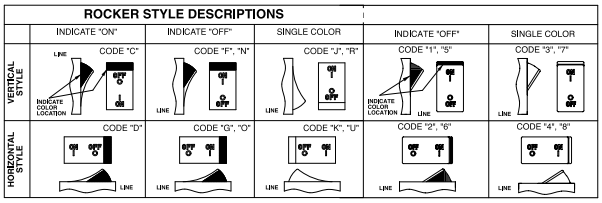

5 FREQUENCY & DELAY
21 50 / 60Hz Ultra Short
22 50 / 60Hz Short
24 50 / 60Hz Medium
26 50 / 60Hz Long

6 CURRENT RATING (AMPERES)

CODE	AMPERES	CODE	AMPERES	CODE	AMPERES	CODE	AMPERES
210	0.100	**285**	0.850	**450**	5.000	**712**	12.500
215	0.150	**290**	0.900	**455**	5.500	**613**	13.000
220	0.200	**295**	0.950	**460**	6.000	**614**	14.000
225	0.250	**410**	1.000	**465**	6.500	**615**	15.000
230	0.300	**512**	1.250	**470**	7.000	**616**	16.000
235	0.350	**415**	1.500	**475**	7.500	**617**	17.000
240	0.400	**517**	1.750	**480**	8.000	**618**	18.000
245	0.450	**420**	2.000	**485**	8.500	**620**	20.000
250	0.500	**522**	2.250	**490**	9.000	**622**	22.000
255	0.550	**425**	2.500	**495**	9.500	**624**	24.000
260	0.600	**527**	2.750	**610**	10.000	**625**	25.000
265	0.650	**430**	3.000	**710**	10.500	**630**	30.000
270	0.700	**435**	3.500	**611**	11.000		
275	0.750	**440**	4.000	**711**	11.500		
280	0.800	**445**	4.500	**612**	12.000		

7 TERMINAL [2]
1 [3] Push-On 0.250 Tab (Q.C.)
2 Screw 8-32 w/upturned lugs
3 Screw 8-32 (Bus Type)
4 Screw 10-32 w/upturned lugs
5 Screw 10-32 (Bus Type)
B Screw M5 w/upturned lugs
C Screw M4 w/upturned lugs
E Screw M4 (Bus Type)
H Screw M5 (Bus Type)

8 ACTUATOR COLOR & LEGEND

Handle Actuator Color	I-O	ON-OFF	Dual	Rocker Actuator Color Single	Visi-Rocker
White	A	B	1	Black	White
Black	C	D	2	White	N/A
Red	F	G	3	White	Red
Green	H	J	4	White	Green
Blue	K	L	5	White	Blue
Yellow	M	N	6	Black	Yellow
Gray	P	Q	7	Black	Gray
Orange	R	S	8	Black	Orange

9 MOUNTING / BARRIERS

	MOUNTING STYLE Threaded Insert, 2 per pole	BARRIERS
A	6-32 X 0.195 inches	yes
B	M3 x 5mm	yes
	Rockerguard Bezel, 2 per pole	
C	6-32 x 0.195”	yes
D	M3 x 5 mm	yes
	Standard Bezel with Recessed Off-Side Flat Rocker Threaded Insert, 2 per pole	
E	6-32 x 0.195”	yes
F	M3 x 5 mm	yes

10 LEAKAGE CURRENT TRIP LEVEL - MAX. TRIP CURRENT
A [3,4] 5 MA (CLASS A GFCI)
E 30 MA (ELCI)

11 AGENCY APPROVAL
A without Approvals
G UL489 Listed, CSA Certified
C UL1077
I [5] UL1077 / UL1500 Ignition Protected

Notes:
1 Actuator Code:
A: Handle tie pin spacer(s) and retainers provided unassembled with multi-pole units.
B: Handle location as viewed from front of breaker:
2 pole - left pole 3 pole - center pole
2 Screw Terminals are recommended on ratings greater than 20 amps.
3 Available with leakage current trip level - Max trip current code E, and agency approval C.
4 30mA per UL1053, available with agency approval codes C & G.
5 UL1500 only available with 30MA trip level.

Email: sales@carlingtech.com Application Support: team2@carlingtech.com
Phone: (860) 793–9281 Fax: (860) 793–9231 **www.carlingtech.com**

Dimensional Specifications: in. [mm]

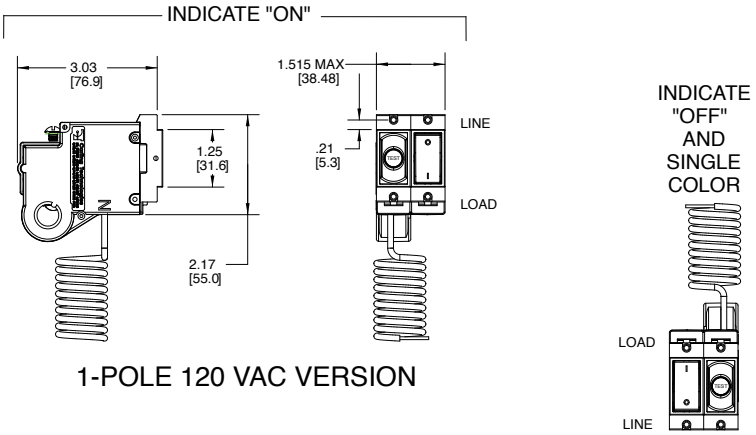

1-POLE 120 VAC VERSION

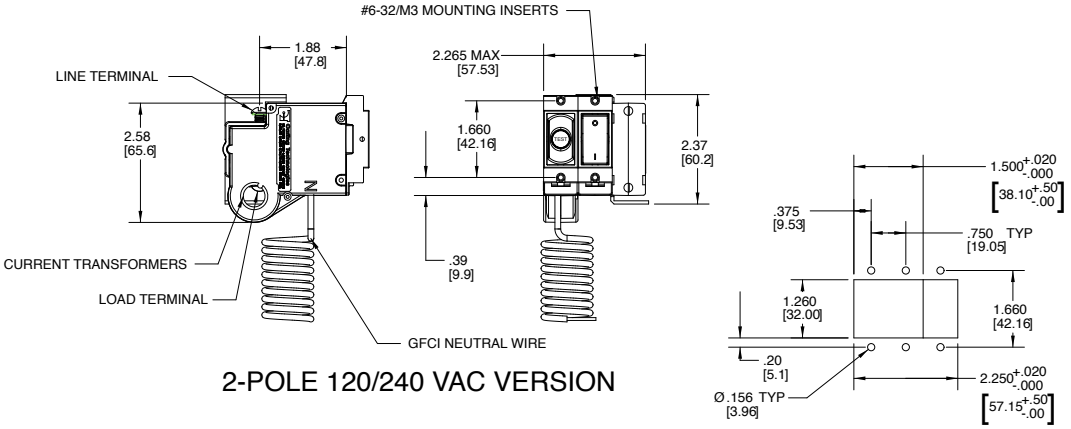

2-POLE 120/240 VAC VERSION

PANEL CUTOUT

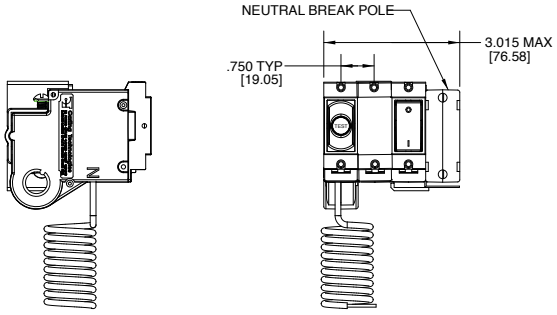

2-POLE 120/240 VAC WITH NEUTRAL BREAK

TERMINAL DIMENSIONAL DETAIL & RATING

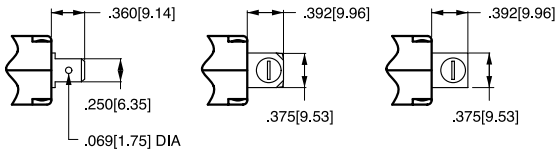

TAB (Q.C.)
30 AMP

UPTURN LUG
#8-32 30 AMP
#10-32 30 AMP
M5 30 AMP
M4 30 AMP

BUS
#8-32 30 AMP
#10-32 50 AMP

TABLE A
TIGHTENING TORQUE SPECIFICATIONS

THREAD SIZE	TORQUE
#6-32 & M3 MOUNTING HARDWARE	7-9 IN-LBS [0.8-1.0 NM]
#8-32 & M4 THREAD TERMINAL SCREW	12-15 IN-LBS [1.4-1.7 NM]
#10-32 & M5 THREAD TERMINAL SCREW	15-20 IN-LBS [1.7-2.3 NM]

Notes:
1 All dimensions are in inches [millimeters].
2 Tolerance ±.020 [.51] unless otherwise specified.

Dimensional Specifications: in. [mm]

TYPICAL 1-POLE 120 VAC VERSION

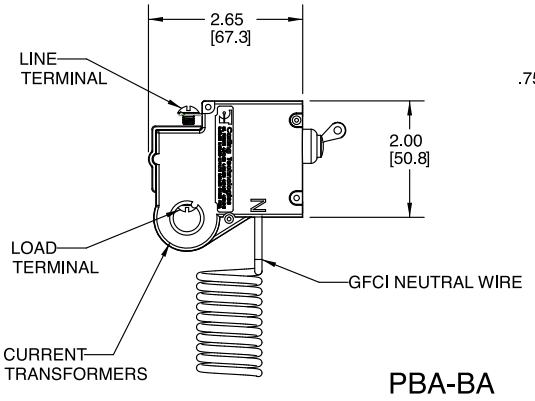

PBA-BA

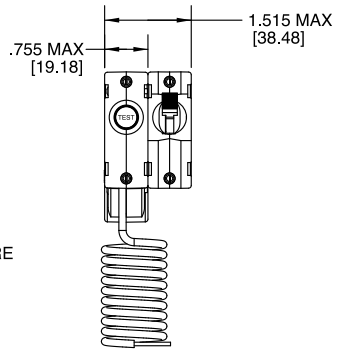

TYPICAL 2-POLE 120/240 VAC WITH NEUTRAL BREAK VERSION

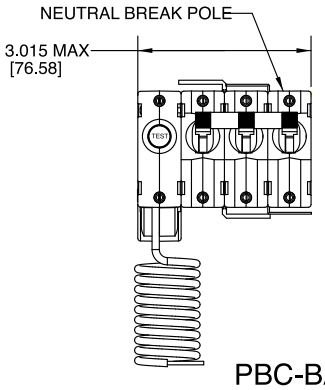

PBC-BA

TYPICAL 2-POLE 120/240 VAC VERSION

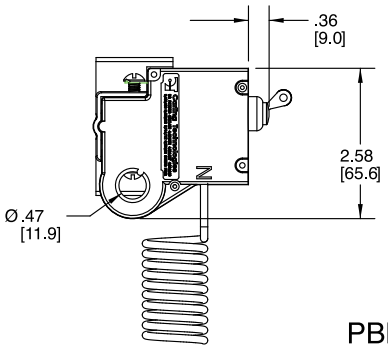

PBB-BA

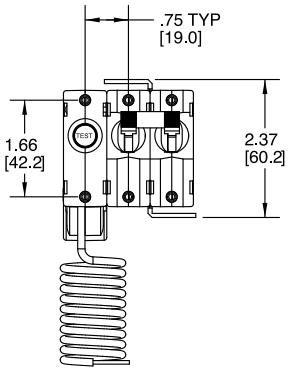

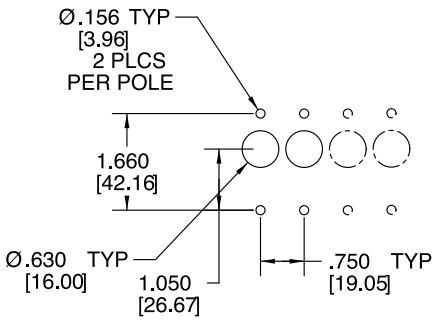

PANEL CUTOUT

Notes:
1 All dimensions are in inches [millimeters].
2 Tolerance ±.020 [.51] unless otherwise specified.

120 VAC with Switched Neutral

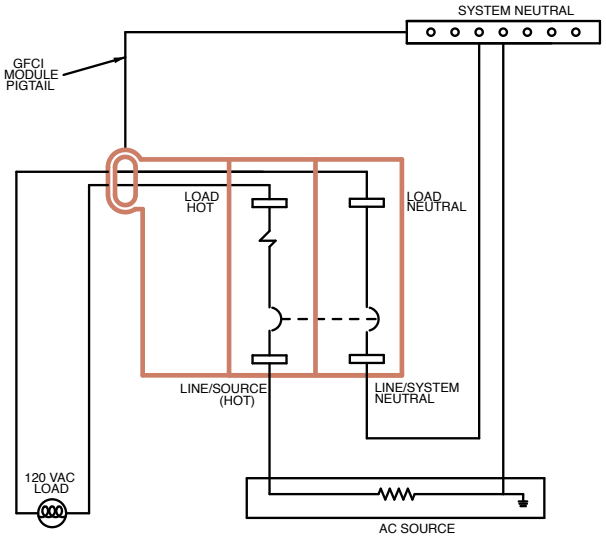

120 VAC WITH SWITCHED NEUTRAL

120 VAC without Switched Neutral

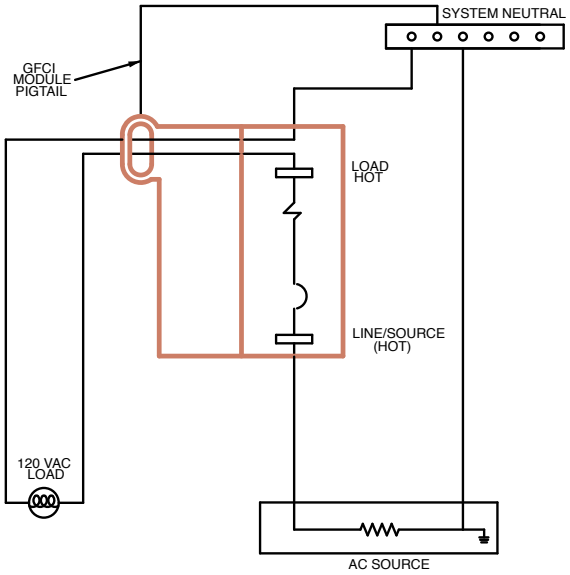

120 VAC WITHOUT SWITCHED NEUTRAL

120/240 VAC with Switched Neutral

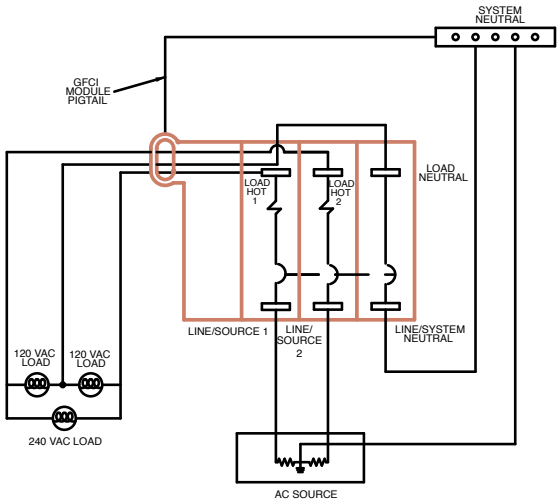

120 VAC WITH SWITCHED NEUTRAL

120/240 VAC without Switched Neutral

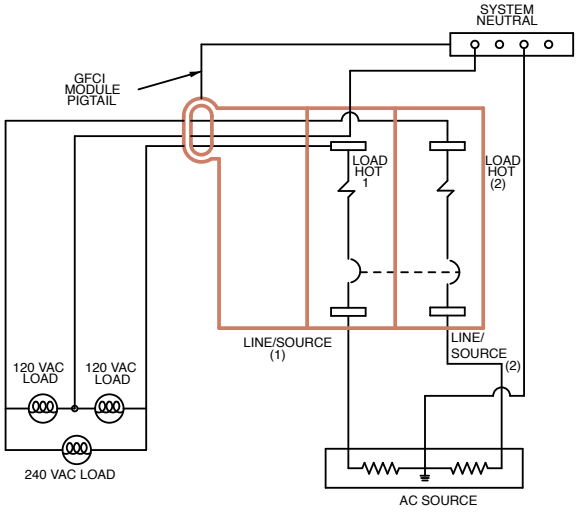

120 VAC WITHOUT SWITCHED NEUTRAL

8	PB	-	1	4	1
1 Type Number	*2 Series*		*3 Actuator*	*4 Poles*	*5 Mounting*

1 TYPE NUMBER
8 Circuit Breaker Assembly

2 SERIES
PB

3 ACTUATOR TYPE
1 Handle, one per pole
2 Handle, one per multipole unit
A Rocker [2]

4 POLES PER UNIT - INCLUDING ELECTRONIC MODULE
2 Two
3 Three
4 Four

5 MOUNTING SCREWS / PLATE MATERIAL [1]
1 6-32 Thread Phillips Head
2 M-3 Thread Phillips Head
3 6-32 Thread Slotted Head
4 M-3 Thread Slotted Head
5 6-32 Thread Phillips Head with Stainless Steel Plate
6 M-3 Thread Phillips Head with Stainless Steel Plate
7 6-32 Thread Slotted Head with Stainless Steel Plate
8 M-3 Thread Slotted Head with Stainless Steel Plate

Notes:
1 Screws supplied to accommodate mounting panel thickness of 1/8" ± 1/32". Consult Factory for additional options
2 Available for Flat and Curved Rocker options - No Rockerguard Bracket

Handle Style Panel Seal

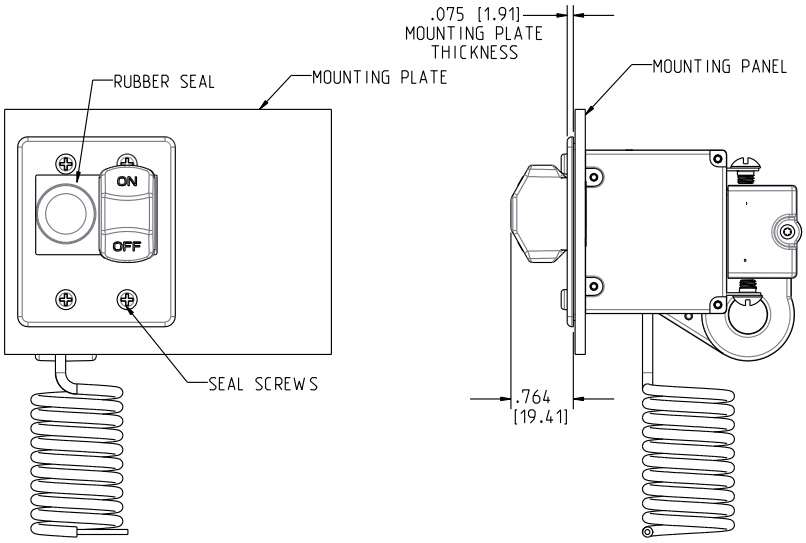

Rocker Style Panel Seal

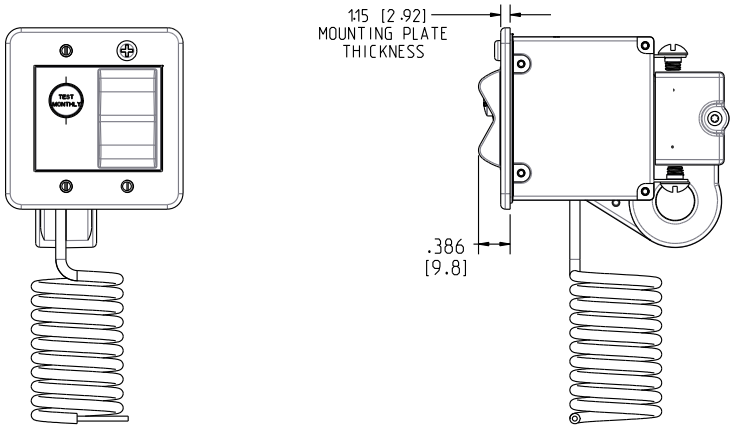

Handle Actuator

HANDLE, 1 PER POLE

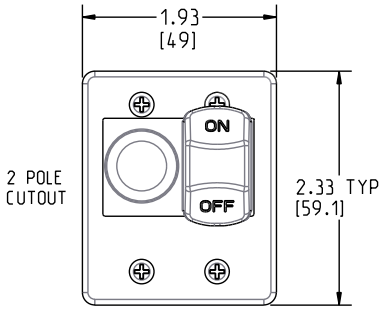

8PB-12

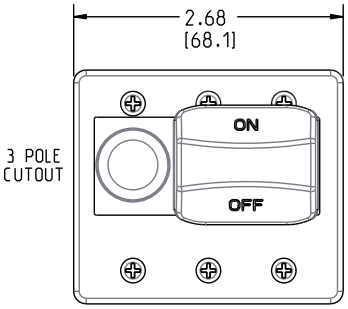

8PB-13

HANDLE, 1 PER MULTIPOLE UNIT

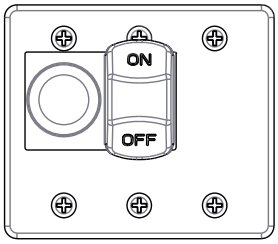

8PB-23

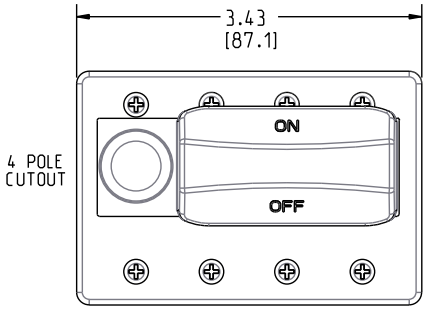

8PB-14

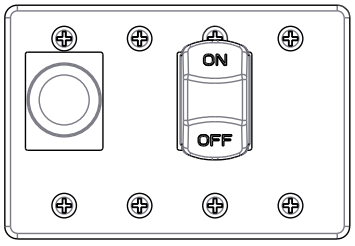

8PB-24

Rocker Actuator

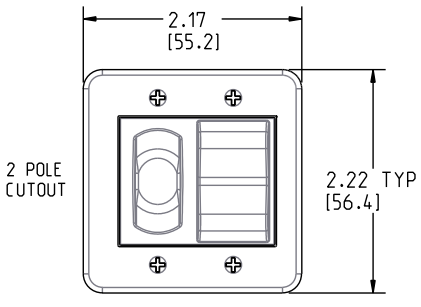

8PB-A2

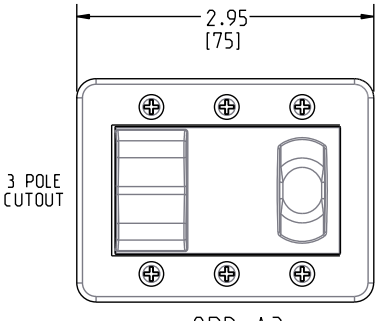

8PB-A3

Time Delay Curves

Ultra Short

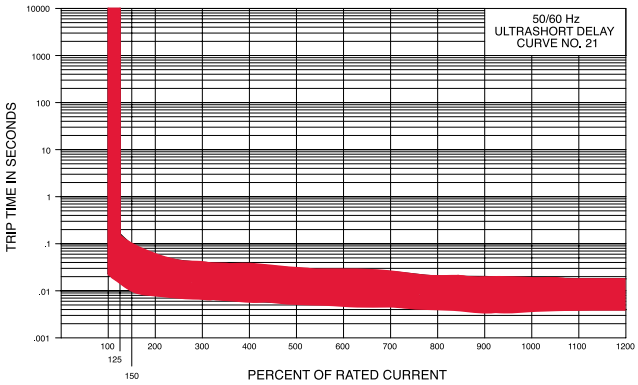

Medium

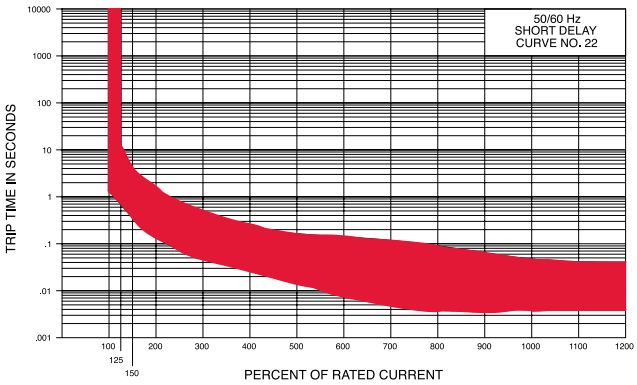

Short

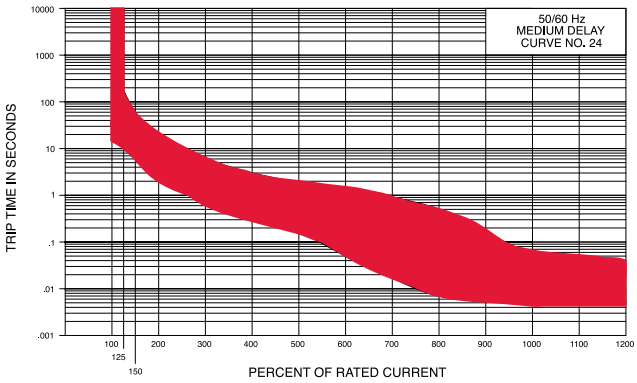

Long

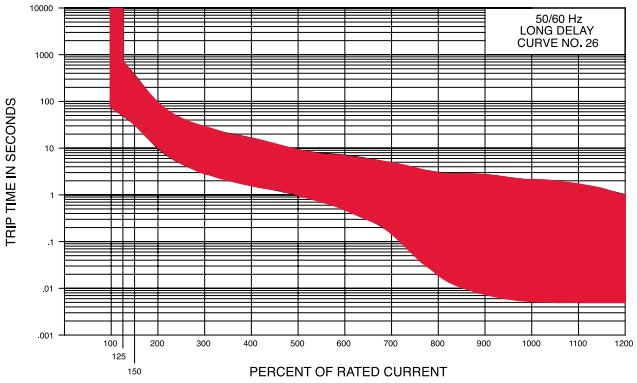

Authorized Sales Representatives and Distributors

Click on a region of the map below to find your local representatives and distributors or visit ***www.carlingtech.com/findarep***.



About Carling

Founded in 1920, Carling Technologies is a leading manufacturer of electrical and electronic switches and assemblies, circuit breakers, electronic controls, power distribution units, and multiplexed power distribution systems. With four ISO9001 and IATF16949 registered manufacturing facilities and technical sales offices worldwide, Carling Technologies Sales, Service and Engineering teams do much more than manufacture electrical components, they engineer powerful solutions! To learn more about Carling please visit **www.carlingtech.com/company-profile.**

To view all of Carling's environmental, quality, health & safety certifications please visit **www.carlingtech.com/environmental-certifications**

Worldwide Headquarters

Carling Technologies, Inc.
60 Johnson Avenue, Plainville, CT 06062
Phone: 860.793.9281 **Fax:** 860.793.9231
Email: sales@carlingtech.com

Northern Region Sales Office: nrsm@carlingtech.com
Southeast Region Sales Office: sersm@carlingtech.com
Midwest Region Sales Office: mrsm@carlingtech.com
West Region Sales Office: wrsm@carlingtech.com
Latin America Sales Office: larsm@carlingtech.com

Asia-Pacific Headquarters

Carling Technologies, Asia-Pacific Ltd.,
Suite 1607, 16/F Tower 2, The Gateway,
Harbour City, 25 Canton Road,
Tsimshatsui, Kowloon, Hong Kong
Phone: Int + 852-2737-2277 **Fax:** Int + 852-2736-9332
Email: sales@carlingtech.com.hk

Shenzhen, China: shenzhen@carlingtech.com
Shanghai, China: shanghai@carlingtech.com
Pune, India: india@carlingtech.com
Kaohsiung, Taiwan: taiwan@carlingtech.com
Yokohama, Japan: japan@carlingtech.com

Europe | Middle East | Africa Headquarters

Carling Technologies LTD
4 Airport Business Park, Exeter Airport,
Clyst Honiton, Exeter, Devon, EX5 2UL, UK
Phone: Int + 44 1392.364422 **Fax:** Int + 44 1392.364477
Email: ltd.sales@carlingtech.com

Germany: gmbh@carlingtech.com
France: sas@carlingtech.com

Carling Technologies®
Innovative Designs. Powerful Solutions.