OPTO 22

DATA SHEET

Form 528-010122

Part Number	Description
PB24Q	Quad 6-Module Position Rack

Description 6-MODULE POSITION RACK

The PB24Q I/O mounting rack can accommodate up to six Quad Pak I/O modules for a total of 24 I/O channels. The PB24Q I/O mounting rack uses a 50-pin card edge connector for interface to computer parallel I/O ports via a 50-conductor ribbon cable. The mounting rack features a replaceable 5-amp fuse for each pair of I/O module positions. Status indicating LEDs are mounted on the Quad Pak I/O modules. All Quad Pak modules are designed to operate on 5 Volt logic.

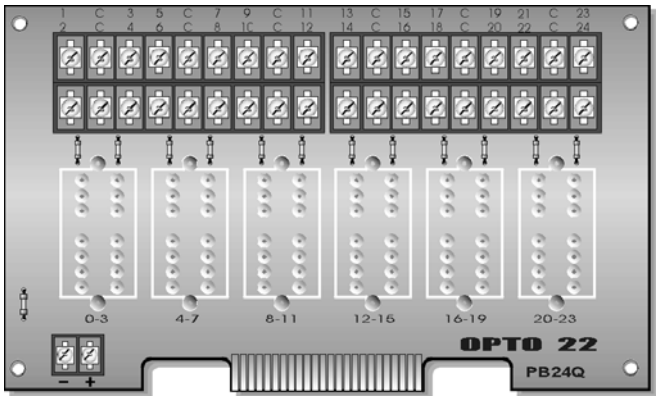

Specifications

Operating Temperature	0° to 70° C 95% relative humidity Non-condensing
Interface Connector Field Logic	 6-32 screw terminals 50-conductor card edge connector

Dimensions

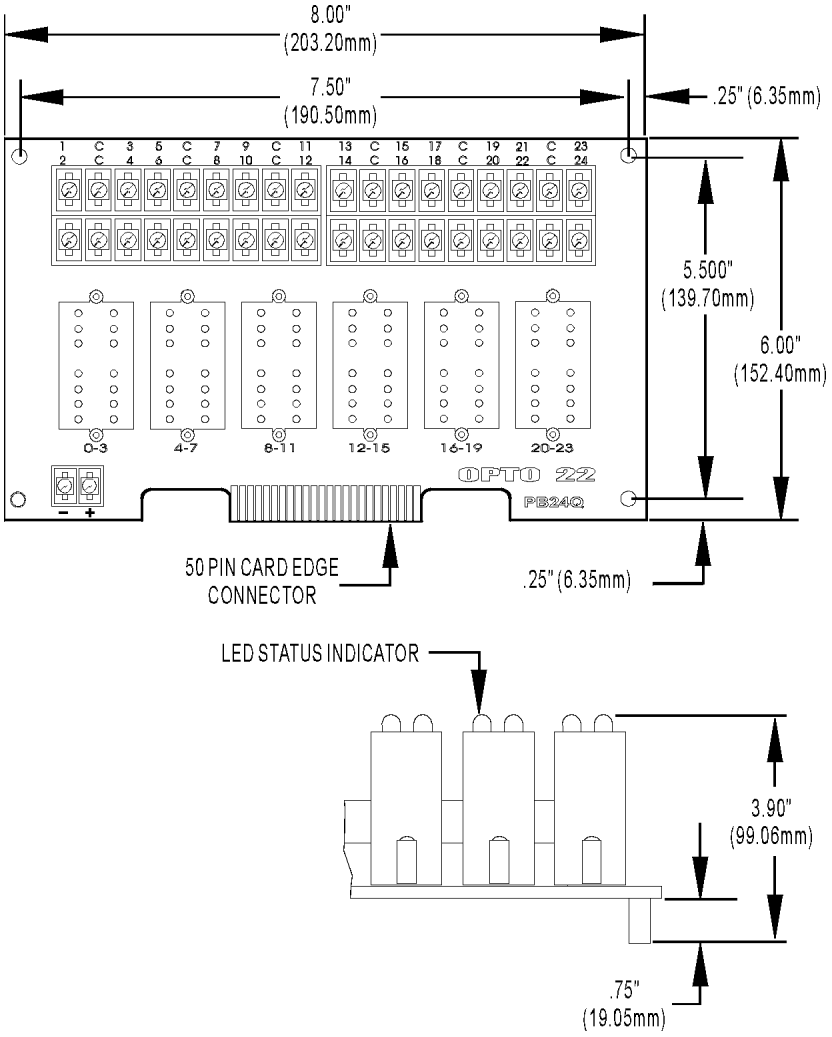

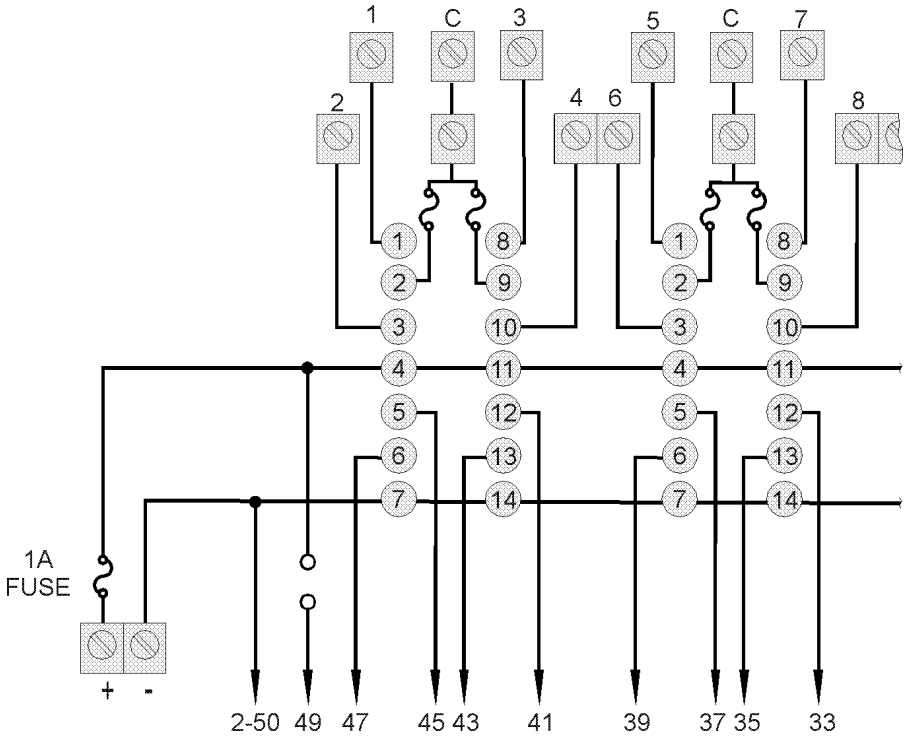

Module Position	Control (Edge Connector)	Field (Terminal Strip)
0	47	1 & C
1	45	2 & C
2	43	3 & C
3	41	4 & C
4	39	5 & C
5	37	6 & C
6	35	7 & C
7	33	8 & C
8	31	9 & C
9	29	10 & C
10	27	11 & C
11	25	12 & C
12	23	13 & C
13	21	14 & C
14	19	15 & C
15	17	16 & C
16	15	17 & C
17	13	18 & C
18	11	19 & C
19	9	20 & C
20	7	21 & C
21	5	22 & C
22	3	23 & C
23	1	24 & C

Opto 22 • 43044 Business Park Drive • Temecula, CA 92590-3614 • Phone: (951) 695-3000 • (800) 321-OPTO • Fax: (951) 695-3095 • www.opto22.com

Inside Sales: (800) 321-OPTO • Product Support: (800) TEK-OPTO • (951) 695-3080 • Fax: (951) 695-3017 • E-mail: sales@opto22.com

© 1991–2001 Opto 22. All rights reserved. All trademarks, trade names, logos, and service marks referenced herein belong to their respective companies.

Products

Opto 22 produces a broad array of reliable, flexible hardware and software products for industrial automation, remote monitoring, enterprise data acquisition, and machine-to-machine (M2M) applications.

SNAP Ethernet Systems

Based on the Internet Protocol (IP), SNAP Ethernet systems offer flexibility in their network connectivity and in the software applications they work with. The physical network may be a wired Ethernet network, a cellular wireless network, or a modem. A wide variety of software applications can exchange data with SNAP Ethernet systems, including:

- Opto 22's own ioProject™ suite of control and HMI software
- Manufacturing resource planning (MRP), enterprise management, and other enterprise systems
- Human-machine interfaces (HMIs)
- Databases
- Email systems
- OPC client software
- Custom applications
- Modbus/TCP software and hardware.



SNAP Ethernet system hardware consists of controllers and I/O units. Controllers provide central control and data distribution. I/O units provide local connection to sensors and equipment.

SNAP OEM Systems

Opto 22 SNAP OEM I/O systems are highly configurable, programmable processors intended for OEMs, IT professionals, and others who need to use custom software with Opto 22 SNAP I/O modules.



Linux® applications running on these systems can read and write to analog, simple digital, and serial I/O points on SNAP I/O modules using easily implemented file-based operations. Applications can be developed using several common development tools and environments, including C or C++, Java, and shell scripts.

M2M Systems

Machine-to-machine (M2M) systems connect your business computer systems to the machines, devices, and environments you want to monitor, control, or collect data from. M2M systems often use wireless cellular communications to link remote facilities to central systems over the Internet, or to provide monitoring and control capability via a cellular phone.

Opto 22's Nvio™ systems include everything you need for M2M—interface and communications hardware, data service plan, and Web portal—in one easy-to-use package. Visit nvio.opto22.com for more information.

Opto 22 Software



Opto 22's ioProject and FactoryFloor® software suites provide full-featured and cost-effective control, HMI, and OPC software to power your Opto 22 hardware. These software applications help you develop control automation solutions, build easy-to-use operator interfaces, and expand your manufacturing systems' connectivity.

Quality

In delivering hardware and software solutions for worldwide device management and control, Opto 22 retains the highest commitment to quality. We do no statistical testing; each product is made in the U.S.A. and is tested twice before leaving our 160,000 square-foot manufacturing facility in Temecula, California. That's why we can guarantee solid-state relays and optically-isolated I/O modules *for life*.

Product Support

Opto 22's Product Support Group offers comprehensive technical support for Opto 22 products. The staff of support engineers represents years of training and experience, and can assist with a variety of project implementation questions. Product support is available in English and Spanish from Monday through Friday, 7 a.m. to 5 p.m. PST.

Opto 22 Web Sites

- www.opto22.com
- nvio.opto22.com
- www.internetio.com (live Internet I/O demo)

Other Resources

- OptoInfo CDs
- Custom integration and development
- Hands-on customer training classes.



About Opto 22

Opto 22 manufactures and develops hardware and software products for industrial automation, remote monitoring, enterprise data acquisition, and machine-to-machine (M2M) applications. Using standard, commercially available Internet, networking, and computer technologies, Opto 22's input/output and control systems allow customers to monitor, control, and acquire data from all of the mechanical, electrical, and electronic assets that are key to their business operations. Opto 22's products and services support automation end users, OEMs, and information technology and operations personnel.

Founded in 1974 and with over 85 million Opto 22-connected devices deployed worldwide, the company has an established reputation for quality and reliability.

Opto 22 • 43044 Business Park Drive • Temecula, CA 92590-3614 • Phone: (951) 695-3000 • (800) 321-OPTO • Fax: (951) 695-3095 • www.opto22.com

Inside Sales: (800) 321-OPTO • Product Support: (800) TEK-OPTO • (951) 695-3080 • Fax: (951) 695-3017 • Email: sales@opto22.com • Form 1335-050601

© 2004-2005 Opto 22. All rights reserved. All trademarks, trade names, logos, and service marks referenced herein belong to their respective companies.