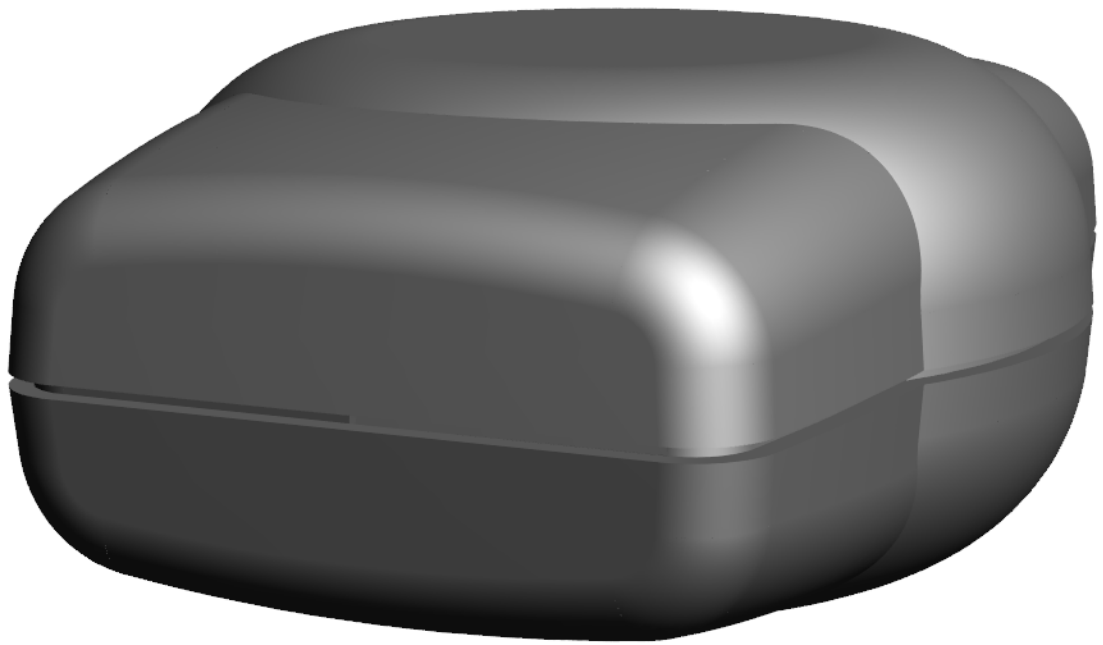





Ordering a market-ready enclosure© is made fast and affordable with our complete in-house capabilities. New Age provides machined openings to fit your PCB, pad printing for your graphics, custom enclosures, custom colors, final assembly, testing and fulfillment services to save you additional time and money. Ask your representative for a free quote today 805-595-1310.

Fast and Affordable Customization



CNC Modifications
Pad Printing
Colored Resins
EMI/RF Shielding
Custom Enclosure
Assembly & Testing

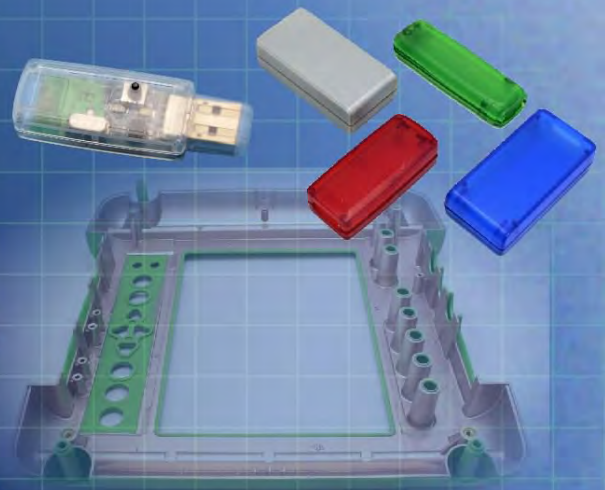





nqa. AS9100 Registered

ISO quality
off-the-shelf
to market-ready©

NEW AGE
ENCLOSURES

www.NewAgeEnclosures.com

4330 Santa Fe Road • San Luis Obispo, CA 93401 • T 805.595.1310 • F 805.595.1024

NAE Cover H8 Boyer

NOTES: UNLESS OTHERWISE SPECIFIED

1. CORNERS DRAWN SHARP TO BE R.005 MAXIMUM.

2. EXTERIOR SURFACE TEXTURE TO BE LIGHT EDM FINISH.
   EQUIVELANT TO MT-11010.

3. INTERIOR SURFACE TEXTURE TO BE: NONE.

4. ALL INSIDE RADII .010R. UNLESS OTHERWISE SPECIFIED.

5. ALL EXTERNAL DIMENSIONS AFFECTED BY THE DRAFT APPLY AT
   THE LARGE END OF THE FEATURE, AND ALL INTERNAL FEATURES
   AFFECTED BY THE DRAFT APPLY AT THE SMALL END OF THE FEATURE
   UNLESS OTHERWISE SPECIFIED.

6. 1 DEGREE DRAFT IN THE DIRECTION OF PULL IS PERMISSIBLE
   UNLESS OTHERWISED SPECIFIED.

7. THIS ENCLOSURE IS A PRESS FIT ASSEMBLY. FOR PERMANENT
   CLOSURE: A DROP OF ADHESIVE OR ULTRASONIC WELDING IS REQUIRED.

8. MOUNTING SCREWS FOR THE PCB ARE SOLD SEPERATELY.

9. MATERIAL / COLOR: ABS PLASTIC IS STANDARD IN BLACK OR WHITE.
   CUSTOM MATERIALS AND COLORS ARE AVAILABLE UPON REQUEST FOR QUOTE.

10. PCB SIZES ARE RECOMMENDATIONS ONLY. FINAL SIZES AND
    VERIFICATION OF IT'S FIT ARE THE SOLE RESPONSIBILITY OF OEM.

11. THIS DRAWING IS BASED ON A SOLID MODEL, AND IS FURTHER DEFINED BY THE SOLID MODEL FILE.

12. ALLOWABLE FLASH: 0.010 MAX.

13. ALL EJECTOR PIN MARKS TO BE WITHIN 0.010" OF FLUSH, PROTRUDING OR BELOW FLUSH.

R E V I S I O N

REV.	DRAWN BY	ECO No	DESCRIPTION	DATE	APPROVED
A	M BOYER	DR XXX	PRELIMINARY RELEASE	06-Apr-11	D.C.
B	M BOYER		CHANGE TITLE AND PN	25-Jan-12	D.C.
C	M BOYER		ADD LARGER CONFIGURATION	15-Oct-12	D.C.
D	M BOYER		REDUCE THE LENGTH OF ASSY POST	30-Nov-12	D.C.
E	M BOYER		UPDATE NAME	25-Jan-13	D.C.
F	R CRUZ		UPDATE TO AS BUILT	07-Jun-13	D.C.
1.0	R CRUZ		RELEASED	25-Jun-13	

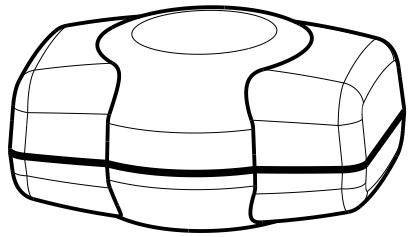

191508M ASSEMBLY
- 191510 COVER
- 191508 BASE
SCALE 1.000

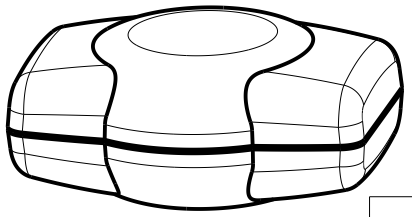

191508S ASSEMBLY
- 191508 COVER
- 191508 BASE
SCALE 1.000

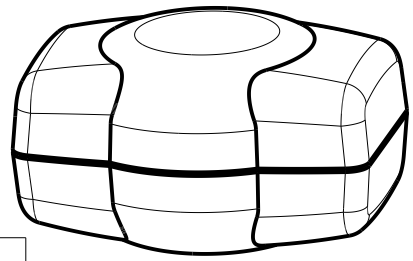

191508T ASSEMBLY
- 191510 COVER
- 191510 BASE
SCALE 1.000

191508(x) CONFIGURATIONS			
	-S	-M	-T
191508 COVER	1		
191508 BASE	1	1	
191510 COVER		1	1
191510 BASE			1

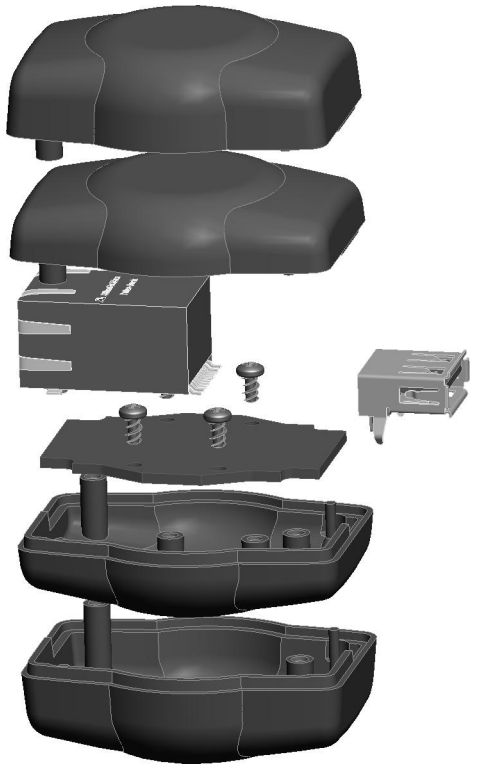

EXPLODED VIEW
SCALE 0.900

ITEM	DESCRIPTION	MATERIAL	COLOR	QTY.
6	2-32 ROUND SHANK x .187" SCREW	ZINK PLATED	MMC 90056A075	4
5	TYPE A - FEMALE USB CONNECTOR	REFERENCE ONLY	CUSTOMER SUPPLIED	1
4	RJ45 FEMALE CONNECTOR	REFERENCE ONLY	CUSTOMER SUPPLIED	1
3	190508 PCB - REFERENCE	.062" THICK	CUSTOMER SUPPLIED	2
2	191510 CASE - STANDARD	ABS	BLACK or WHITE	2
1	191508 CASE - STANDARD	ABS	BLACK or WHITE	2

BILL OF MATERIALS

THIRD ANGLE PROJECTION

DO NOT SCALE DRAWING

NOTICE: THE INFORMATION AND DATA CONTAINED HEREIN IS CONSIDERED PROPRIETARY TO ALLTEC INTEGRATED MFG INC & SHALL REMAIN THE EXCLUSIVE PROPERTY OF ALLTEC INTEGRATED MFG INC. THE HOLDER WILL ASSUME CUSTODY AND CONTROL THAT THIS DOCUMENT WILL NOT BE COPIED, REPRODUCED, OR DISCLOSED WITHOUT THE EXPRESS WRITTEN CONSENT OF ALLTEC INTEGRATED MFG INC POSSESSION OF THIS DOCUMENT DOES NOT CONSTITUTE A GRANT TO MANUFACTURE ANY ITEMS.
© 2012

TOLERANCES: UNLESS OTHERWISE SPECIFIED
DIMENSIONS ARE IN U.S. INCHES.
X.XX = .015 X.XXXX = .001
X.XXX = .010 X.X° = 1°

NEW AGE ENCLOSURES

Customer's Part No: 191508

	BY	DATE
APPROVAL		
CHECK		
ENG.		
SCALE	AS NOTED	
DRAWN BY	M BOYER	06-Apr-11

NEW AGE ENCLOSURES
4330 Santa Fe Road San Luis Obispo, CA. 93401
ph. (805) 595-1310 fax (805) 595-1024
www.newageenclosures.com

STANDARD - E.E.HOUSING
PXX-191508X-XXX

SIZE	DRAWING NAME	SHEET	REV.DOC
A	191508_R1_0	1 OF 6	1.0

191508 ASSEMBLY

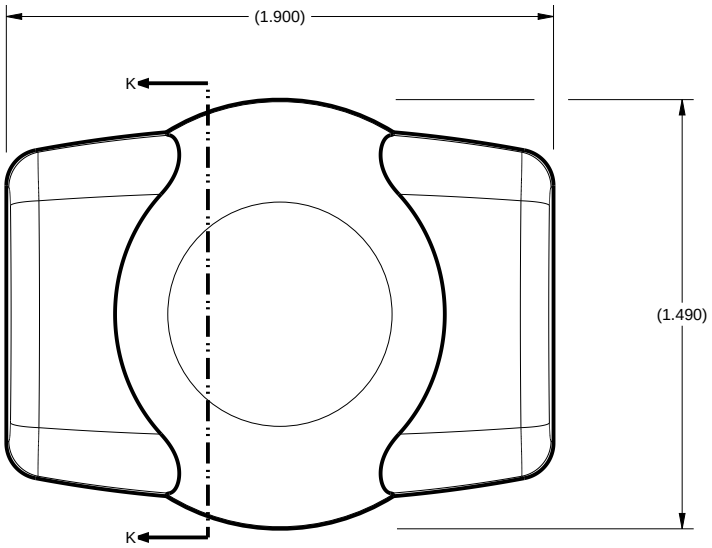

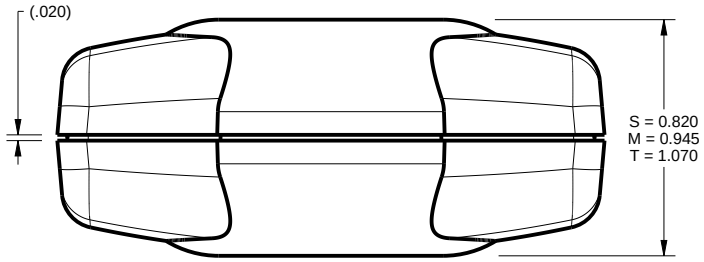

SCALE 1.500

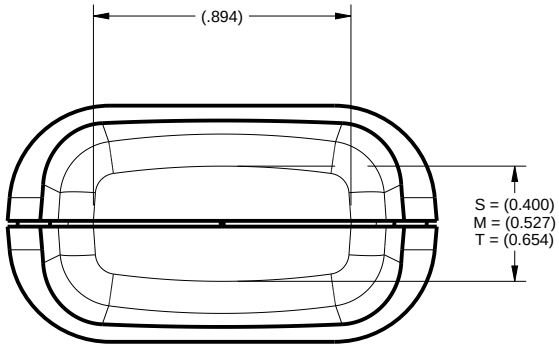

191508S MODELS SHOWN

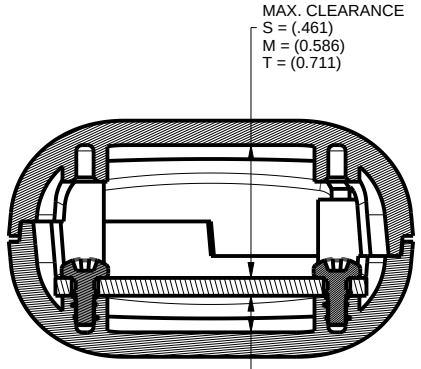

SECTION K-K

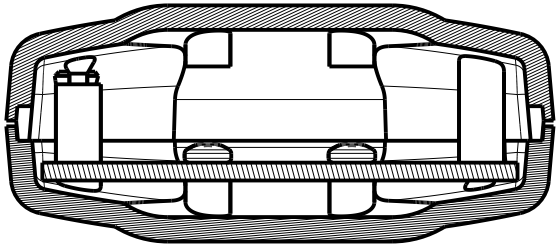

SECTION Y-Y

TOLERANCES: UNLESS OTHERWISE SPECIFIED DIMENSIONS ARE IN U.S. INCHES. X.XX = .015 X.XXXX = .001 X.XXX = .010 X.X° = 1°		NEW AGE ENCLOSURES 4330 Santa Fe Road San Luis Obispo, CA. 93401 ph. (805) 595-1310 fax (805) 595-1024 www.newageenclosures.com			
NEW AGE ENCLOSURES					
Customer's Part No: 191508		STANDARD - E.E.HOUSING PXX-191508X-XXX			
APPROVAL	BY DATE				
CHECK					
ENG.					
SCALE	AS NOTED				
DRAWN BY M BOYER 06-Apr-11		SIZE A	DRAWING NAME 191508_R1_0	SHEET 2 OF 6	REV.DOC 1.0

191508 COVER / BASE

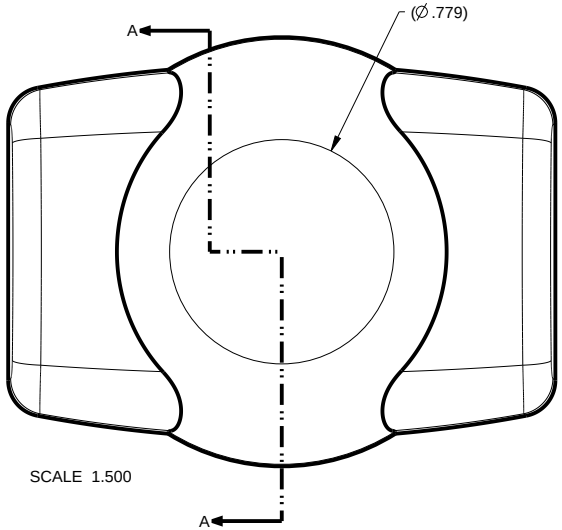

SCALE 1.500

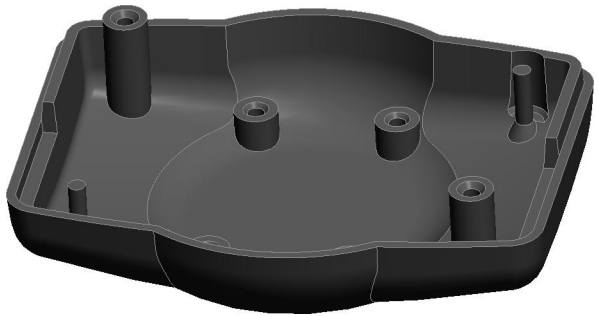

SCALE 1.500

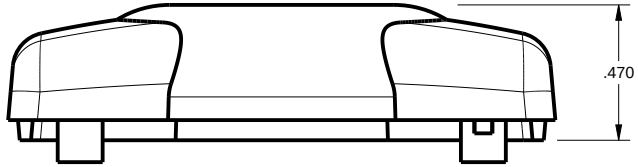

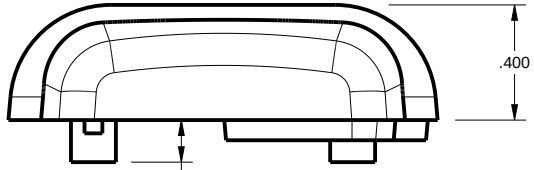

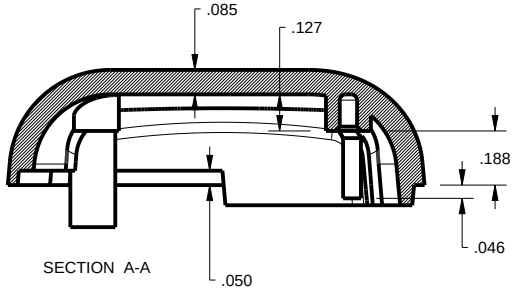

SECTION A-A

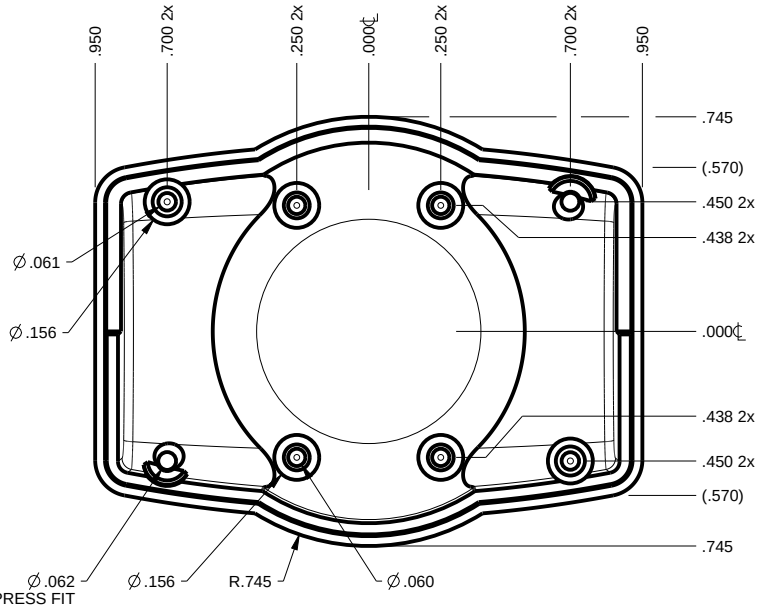

TOLERANCES: UNLESS OTHERWISE SPECIFIED DIMENSIONS ARE IN U.S. INCHES. X.XX = .015 X.XXXX = .001 X.XXX = .010 X.X° = 1°		NEW AGE ENCLOSURES 4330 Santa Fe Road San Luis Obispo, CA. 93401 ph. (805) 595-1310 fax (805) 595-1024 www.newageenclosures.com			
NEW AGE ENCLOSURES		STANDARD - E.E.HOUSING PXX-191508X-XXX			
Customer's Part No: 191508					
APPROVAL	BY DATE				
CHECK					
ENG.					
SCALE	AS NOTED				
DRAWN BY M BOYER 06-Apr-11		SIZE A	DRAWING NAME 191508_R1_0	SHEET 3 OF 6	REV.DOC 1.0

191510 COVER / BASE

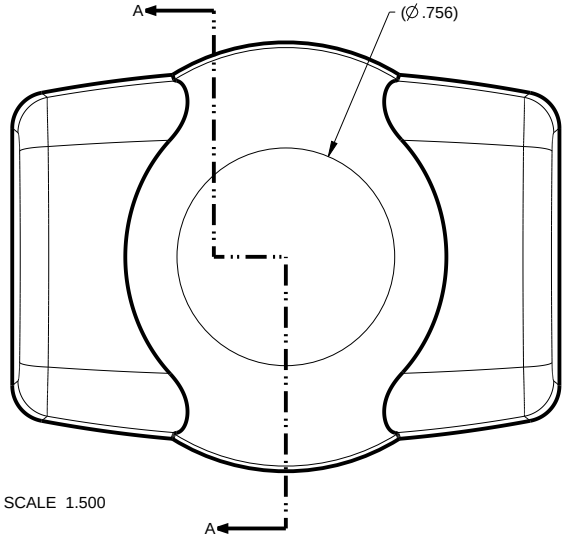

SCALE 1.500

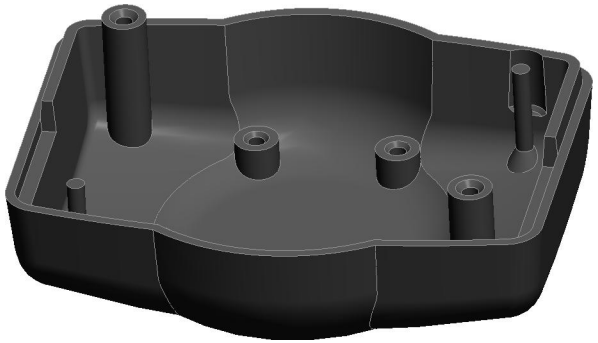

SCALE 1.500

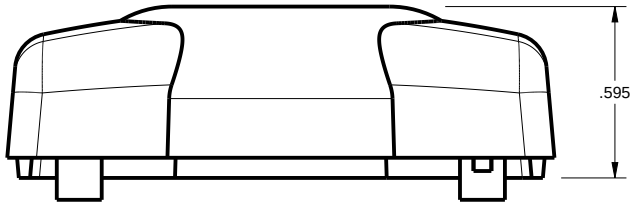

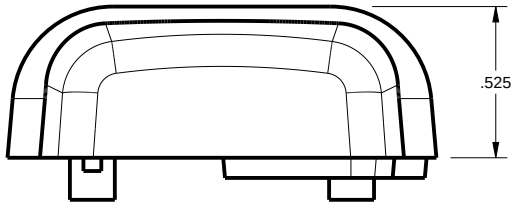

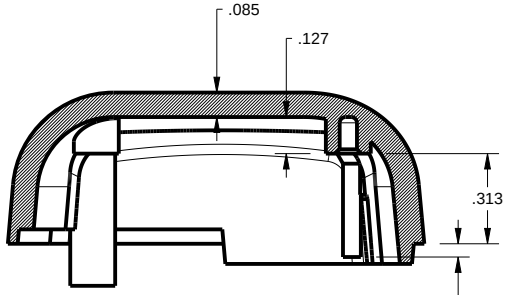

SECTION A-A

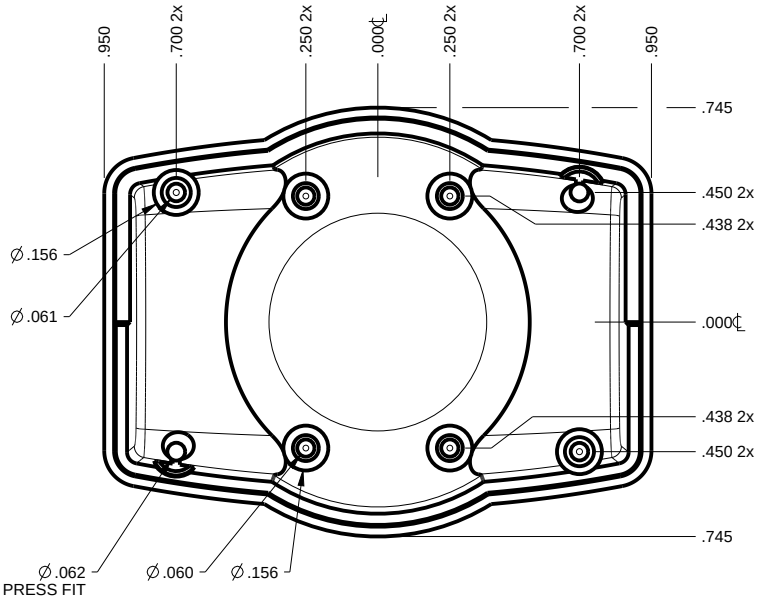

PRESS FIT

TOLERANCES: UNLESS OTHERWISE SPECIFIED DIMENSIONS ARE IN U.S. INCHES. X.XX = .015 X.XXXX = .001 X.XXX = .010 X.X° = 1°		NEW AGE ENCLOSURES 4330 Santa Fe Road San Luis Obispo, CA. 93401 ph. (805) 595-1310 fax (805) 595-1024 www.newageenclosures.com			
NEW AGE ENCLOSURES					
Customer's Part No: 191508		STANDARD - E.E.HOUSING PXX-191508X-XXX			
APPROVAL	BY DATE				
CHECK					
ENG.					
SCALE	AS NOTED				
DRAWN BY M BOYER 06-Apr-11		SIZE A	DRAWING NAME 191508_R1_0	SHEET 4 OF 6	REV.DOC 1.0

191508 PCB - CUSTOMER SUPPLIED

PCB SIZES ARE RECOMMENDATIONS ONLY. FINAL SIZES AND VERIFICATION OF IT'S FIT ARE THE SOLE RESPONSIBILITY OF THE OEM.

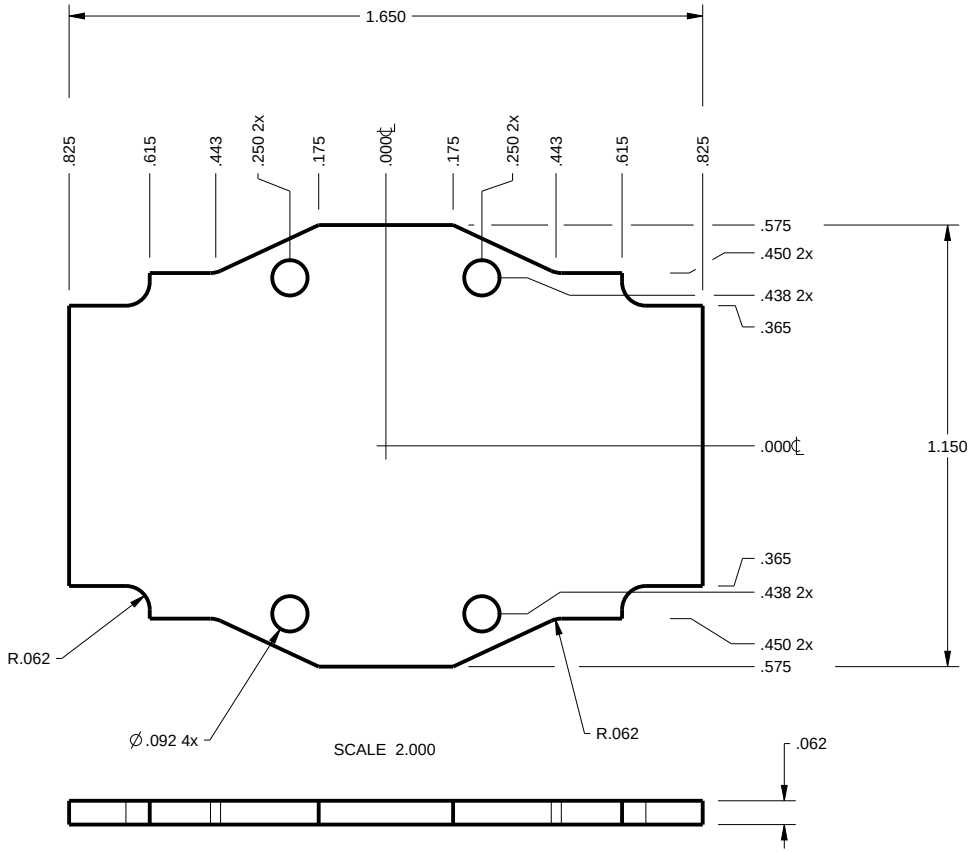

TOLERANCES: UNLESS OTHERWISE SPECIFIED DIMENSIONS ARE IN U.S. INCHES. X.XX = .015 X.XXXX = .001 X.XXX = .010 X.X° = 1°		NEW AGE ENCLOSURES 4330 Santa Fe Road San Luis Obispo, CA. 93401 ph. (805) 595-1310 fax (805) 595-1024 www.newageenclosures.com			
NEW AGE ENCLOSURES					
Customer's Part No: 191508		STANDARD - E.E.HOUSING PXX-191508X-XXX			
APPROVAL	BY DATE				
CHECK					
ENG.					
SCALE	AS NOTED				
DRAWN BY M BOYER 06-Apr-11		SIZE A	DRAWING NAME 191508_R1_0	SHEET 5 OF 6	REV.DOC 1.0

2nd OPERATION DETAILS

NEW AGE ENCLOSURES DELIVERS YOUR ENCLOSURE MARKET-READY WITH IN-HOUSE
CNC MACHINING, PAD PRINTING, ASSEMBLY, AND FULFILLEMENT.
ALL SURFACES AND AREAS ARE AVAILABLE FOR CNC ALTERATION BY NEW AGE ENCLOSURES
CALL (805) 595-1310 FOR PRICING AND SCHEDULE.
THE INSIDE RADIUS OF ANY MACHINED FEATURES SHOULD BE NO SMALLER THAN .031"

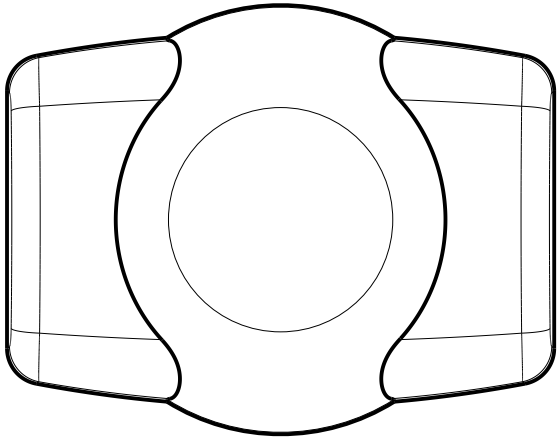

SCALE 1.500

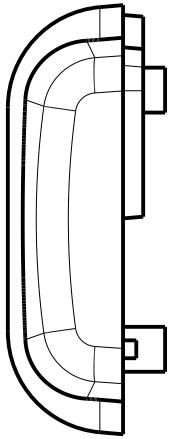

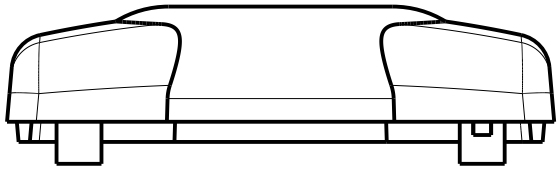

PXX-191508-XXX COVER - ABS, BLACK

STEP NO	DESCRIPTION	CUTTER	FIXTURE	ORIENTATION	PROGRAM
1	CUTOUT	T2 = .062" EM	-	SINGLE	-
2	CUTOUT	T2 = .062" EM	-	-	-

PXX-191508-XXX COVER - ABS, BLACK

STEP NO	DESCRIPTION	COLOR	CLICHE DESCRIPTION	CLICHE No.
3	PAD PRINT			CLXXXX

TOLERANCES: UNLESS OTHERWISE SPECIFIED DIMENSIONS ARE IN U.S. INCHES.
X.XX = .015 X.XXXX = .001
X.XXX = .010 X.X° = 1°

NEW AGE ENCLOSURES

Customer's Part No: 191508

APPROVAL	BY	DATE
CHECK		
ENG.		
SCALE	AS NOTED	
DRAWN BY	M BOYER	06-Apr-11

NEW AGE ENCLOSURES
4330 Santa Fe Road San Luis Obispo, CA. 93401
ph. (805) 595-1310 fax (805) 595-1024
www.newageenclosures.com

STANDARD - E.E.HOUSING
PXX-191508X-XXX

SIZE	DRAWING NAME	SHEET	REV.DOC
A	191508_R1_0	6 OF 6	1.0

Mouser Electronics

Authorized Distributor

Click to View Pricing, Inventory, Delivery & Lifecycle Information:

New Age Enclosures:

P1A-191508-S P3A-191508-S P3A-191508-T P1A-191508-T P3A-191508-M P1A-191508-M