Clamp-on ammeter for AC current



MINI series

Small, compact and particularly resistant, this range of miniature clamps is designed for measurements from a few milli-amperes to 150 A ac. Their shape makes them very practical in confined spaces, such as circuit-breaker boards, control panels or control boxes. They are ideal for use with multimeters.

There are two types of MINI clamps.

The first type operates like a traditional current transformer and provides a current output (mA) which can be used with multimeters, loggers or instruments with current calibres.

The second provides a voltage output proportional to the current measured.

This voltage output enables instruments with AC voltage calibres to display or store current values.

There is also a model with a DC voltage output.

The MINI clamps give True RMS results when used with a True RMS instrument.

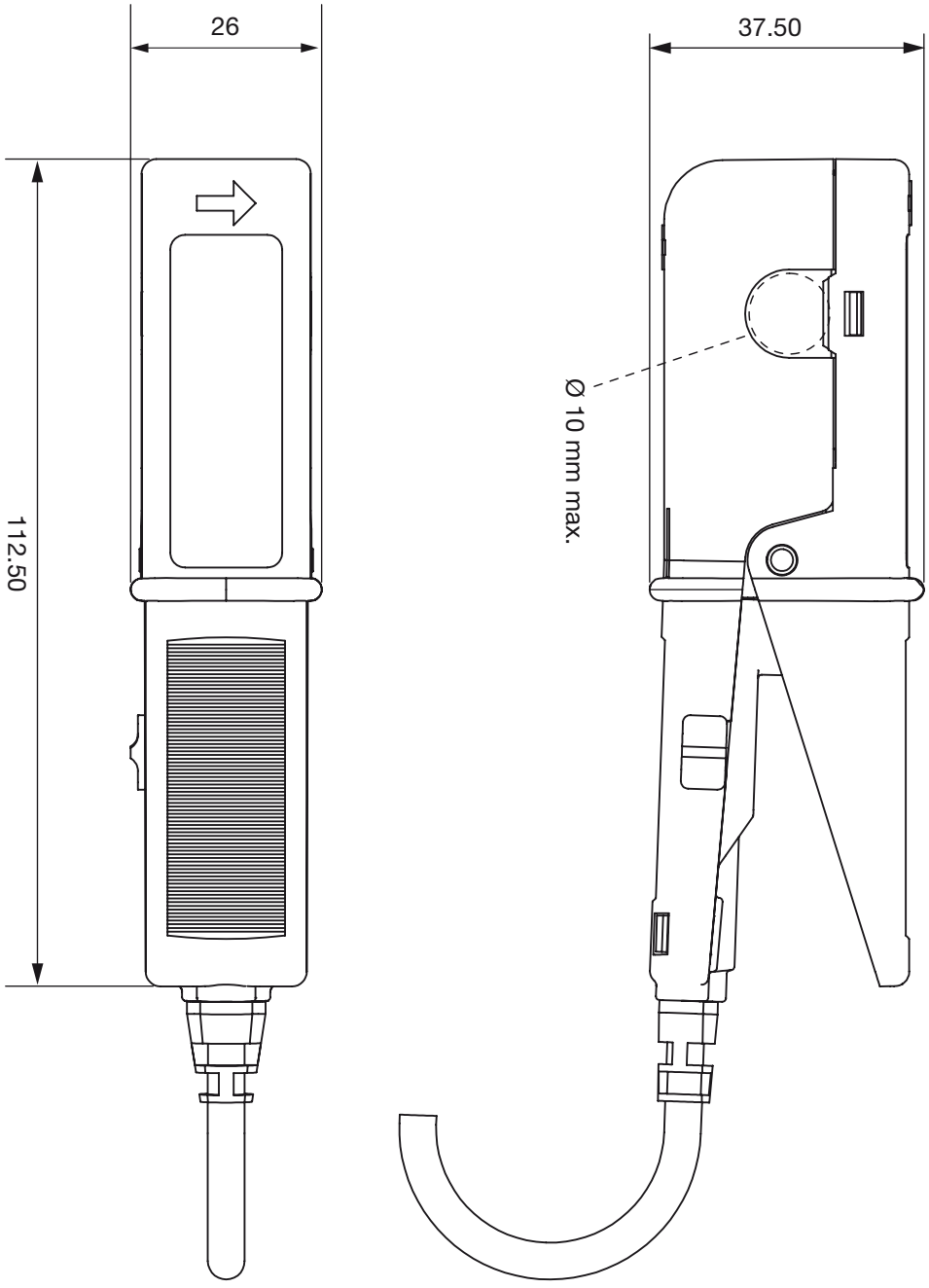
26
37.50
112.50
Ø 10 mm max.

Clamp-on ammeter for AC current
MINI 01 model

Calibre	150 A AC
Sensitivity	1 mA/A (1,000/1)



Description

Small and compact, the MINI 01 clamp-on ammeter is the ideal complement for any multimeter to measure AC currents in low-power tertiary or industrial applications.

If there is a current in the conductor clamped, the MINI 01 clamp is protected against overvoltages during disconnection from the measurement instrument.

Main specifications (1)

Calibre	**150 A**
Measurement range	2 A…150 A
Accuracy in %	≤ 2.5 % + 0.15 A (1 Ω load) ≤ 3 % + 0.15 A (10 Ω load)
Phase shift	Not specified
Output signal	1 mA AC/A AC (1000/1) (150 mA at 150 A)

Output:
Double-insulated cable 1.5 m long, terminated by 2 insulated elbowed male banana connectors Ø 4 mm

Bandwidth: 48 Hz…500 Hz

Clamping capacity:
Cable Ø max 10 mm

Electrical specifications

Load impedance: ≤ 10 Ω

Maximum currents:
I < 150 A permanent from 48 Hz…500 Hz

Influence of temperature:
≤ 0.2 % per 10 K

Influence of adjacent conductor:
≤ 2 mA/A at 50 Hz

Influence of conductor position in jaws:
≤ 0.1 % at 50/60 Hz

Influence of frequency:
≤ 2 % from 65 Hz to 500 Hz

Maximum output voltage (secondary open): 30 V

Mechanical specifications

Operating temperature:
-10 °C to +50 °C

Storage temperature:
-40 °C to +80 °C

Relative humidity for operation:
from 0 to 85 % RH decreasing linearly above 35 °C

Operating altitude: 0 to 2,000 m

Casing protection rating (leakproofing):
IP40 (2) (EN 60529 Ed. 1995)

Fall height:
1.5 m (IEC 68-2-32)

Shock protection:
100 g / 6 ms / half-period (IEC 68-2-27)

Vibration resistance (3):
5-15 Hz (1.5 mm), 15-25 Hz (1 mm), 25-55 Hz (0.25 mm) (IEC 68-2-6)

Self-extinguishing capability:
casing UL94 V2

Dimensions: 130 x 37 x 25 mm

Weight: approx. 180 g

Colours: black casing

Safety specifications

Electrical safety:
Instrument with double insulation or reinforced insulation between the primary, the secondary and the grippable part located under the guard as per EN 61010-1 Ed. 2:2001, EN 61010-2-031 Ed. 2002 & EN 61010-2-032 Ed. 2003
- 600 V category III, pollution degree 2
- 300 V category IV, pollution degree 2

Electromagnetic compatibility:
CE-certified equipment compliant with standard EN 61326-1 (Ed. 97) + A1 (Ed. 98) + A2 (Ed. 01)
- Emission: stipulations for Class B equipment (domestic use).
- Immunity: stipulations for equipment used intermittently on industrial sites.

(1) Conditions of reference: 23 °C ± 3 °K, 20 to 75 % RH, sinusoidal signal with frequency of 48 Hz to 500 Hz, distortion factor < 1 % with no DC component, external DC magnetic field < 40 A/m, no external AC magnetic field, no external conductor with circulating current, conductor centred for measurement, measurement instrument load impedance ≤ 10 Ω.
(2) With clamp closed.
(3) Vibrations expressed in mm peak, scanning of 1 octave/minute for 10 minutes on 3 axes.

To order	Reference
MINI 01 clamp-on AC ammeter with operating manual	P01**105101Z**

Clamp-on ammeter for AC current
MINI 03 model

Calibre	100 A AC
Sensitivity	1 mV/A



Description

Small and compact, the MINI 03 clamp-on ammeter is the ideal complement for any multimeter to measure AC currents in low-power tertiary or industrial applications.

When used with an AC voltmeter, it allows you to directly read the current measured on the voltmeter.

Main specifications (1)

Calibre	100 A
Measurement range	1 A…100 A
Accuracy in %	≤ 2 % + 50 mA
Phase shift	Not specified
Output signal	1 mA AC/A AC (100 mV at 100 A)

Output:
Double-insulated cable 1.5 m long, terminated by 2 insulated elbowed male banana connectors Ø 4 mm

Bandwidth: 48 Hz…500 Hz

Clamping capacity:
Cable Ø max 10 mm

Electrical specifications

Maximum currents:
I < 150 A permanent from 48 Hz…500 Hz

Influence of temperature:
≤ 0.2 % per 10 K

Influence of adjacent conductor:
≤ 2 mA/A at 50 Hz

Influence of conductor position in jaws:
≤ 0.1 % at 50/60 Hz

Influence of frequency:
≤ 1 % from 65 Hz to 500 Hz

Mechanical specifications

Operating temperature:
-10 °C to +50 °C

Storage temperature:
-40 °C to +80 °C

Relative humidity for operation:
0 to 85 % RH decreasing linearly above 35 °C

Operating altitude:
0 to 2,000 m

Casing protection rating (leakproofing):
IP40 (2) (EN 60529 Ed.1995)

Fall height: 1.5 m (IEC 68-2-32)

Shock protection:
100 g / 6 ms / half-period (IEC 68-2-27)

Vibration resistance (3):
5-15 Hz (1.5 mm), 15-25 Hz (1 mm), 25-55 Hz (0.25 mm) (IEC 68-2-6)

Self-extinguishing capability:
casing UL94 V2

Dimensions: 130 x 37 x 25 mm

Weight: approx. 180 g

Colours: black casing

Safety specifications

Electrical safety:
Instrument with double insulation or reinforced insulation between the primary, the secondary and the grippable part located under the guard as per EN 61010-1 Ed. 2:2001, EN 61010-2-031 Ed. 2002 & EN 61010-2-032 Ed. 2003
- 600 V category III, pollution degree 2
- 300 V category IV, pollution degree 2

Electromagnetic compatibility:
CE-certified equipment compliant with standard EN61326-1 (Ed. 97) + A1 (Ed. 98) + A2 (Ed. 01)
- Emission: stipulations for Class B equipment (domestic use).
- Immunity: stipulations for equipment used intermittently on industrial sites.

(1) Conditions of reference: 23 °C ± 3 °K, 20 to 75 % RH, sinusoidal signal with frequency of 48 Hz to 500 Hz, distortion factor < 1 % with no DC component, external DC magnetic field < 40 A/m, no external AC magnetic field, no external conductor with circulating current, conductor centred for measurement, measurement instrument load impedance ≥ 10 kΩ.
(2) With clamp closed.
(3) Vibrations expressed in mm peak, scanning of 1 octave/minute for 10 minutes on 3 axes.

To order	Reference
MINI 03 clamp-on AC ammeter with operating manual	P01105103Z

Clamp-on ammeter for AC current
MINI 05 model

Calibres	10 AAC	100 AAC
Sensitivities	1 mV/mA	1 mV/A

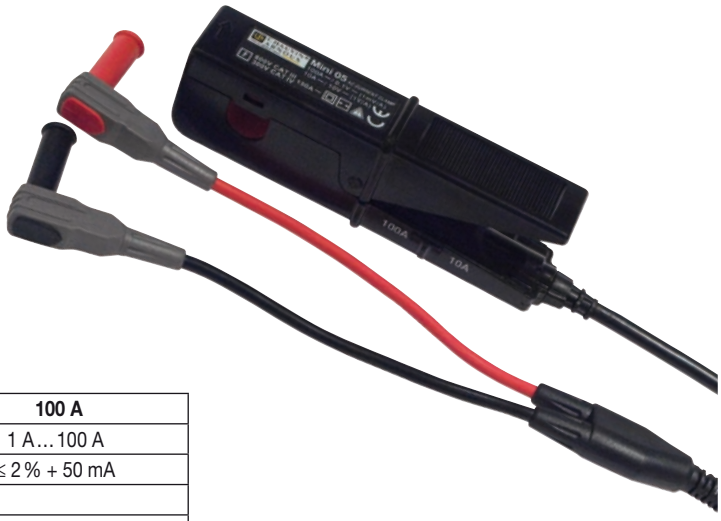

Description

Small and compact, the MINI 05 clamp-on ammeter is the ideal complement for any multimeter to measure AC currents in low-power tertiary or industrial applications.

With its 2 calibres, it offers excellent resolution for measuring AC intensities from 5 mA to 100 A.

Main specifications (1)

Calibre	10 A	100 A
Measurement range	5 mA…10 A	1 A…100 A
Accuracy in %	≤ 3 % + 0.15 mA	≤ 2 % + 50 mA
Phase shift	Not specified	
Output signal	1 mV AC/mA AC (10 V at 10 A)	1 mV AC/A AC (100 mV at 100 A)

Output:
Double-insulated cable 1.5 m long, terminated by 2 insulated elbowed male banana connectors Ø 4 mm

Bandwidth: 48 Hz…500 Hz

Clamping capacity:
Cable Ø max 10 mm

Electrical specifications

Maximum currents:

■ 100 A calibre:
I < 150 A permanent from 48 Hz…500 Hz
■ 10 A calibre:
I < 15 A permanent from 48 Hz…500 Hz

Influence of temperature:
≤ 0.2 % per 10 K

Influence of adjacent conductor:
≤ 2 mA/A at 50 Hz

Influence of conductor position in jaws:
≤ 0.1 % at 50/60 Hz

Influence of frequency:
■ 100 A calibre:
≤ 1 % from 65 Hz to 500 Hz
■ 10 A calibre:
≤ 3 % from 65 Hz to 500 Hz

Mechanical specifications

Operating temperature:
-10 °C to +50 °C

Storage temperature:
-40 °C to +80 °C

Relative humidity for operation:
0 to 85% RH decreasing linearly above 35°C

Operating altitude:
0 to 2,000 m

Casing protection rating (leakproofing):
IP40 (2) (EN 60529 Ed.1995)

Fall height: 1.5 m (IEC 68-2-32)

Shock protection:
100 g / 6 ms / half-period (IEC 68-2-27)

Vibration resistance (3):
5-15 Hz (1.5 mm), 15-25 Hz (1 mm), 25-55 Hz (0.25 mm) (IEC 68-2-6)

Self-extinguishing capability:
casing UL94 V2

Dimensions: 130 x 37 x 25 mm

Weight: approx. 180 g

Colours: black casing

Safety specifications

Electrical safety:
Instrument with double insulation or reinforced insulation between the primary, the secondary and the grippable part located under the guard as per EN 61010-1 Ed. 2:2001, EN 61010-2-031 Ed. 2002 & EN 61010-2-032 Ed. 2003
- 600 V category III, pollution degree 2
- 300 V category IV, pollution degree 2

Electromagnetic compatibility:
CE-certified equipment compliant with standard EN61326-1 (Ed. 97) + A1 (Ed. 98) + A2 (Ed. 01)
- Emission: stipulations for Class B equipment (domestic use).
- Immunity: stipulations for equipment used intermittently on industrial sites.

(1) Conditions of reference: 23 °C ± 3 °K, 20 to 75 % RH, sinusoidal signal with frequency of 48 Hz to 500 Hz, distortion factor < 1 % with no DC component, external DC magnetic field < 40 A/m, no external AC magnetic field, no external conductor with circulating current, conductor centred for measurement, measurement instrument load impedance ≥ 1 MΩ (10 A calibre) & ≥ 10 kΩ (100 A calibre).
(2) With clamp closed.
(3) Vibrations expressed in mm peak, scanning of 1 octave/minute for 10 minutes on 3 axes.

To order	Reference
MINI 05 clamp-on AC ammeter with operating manual	P01105105Z

Clamp-on ammeter for AC current
MINI 09 model

Calibre	150 A AC
Sensitivity	1 mV DC / A AC

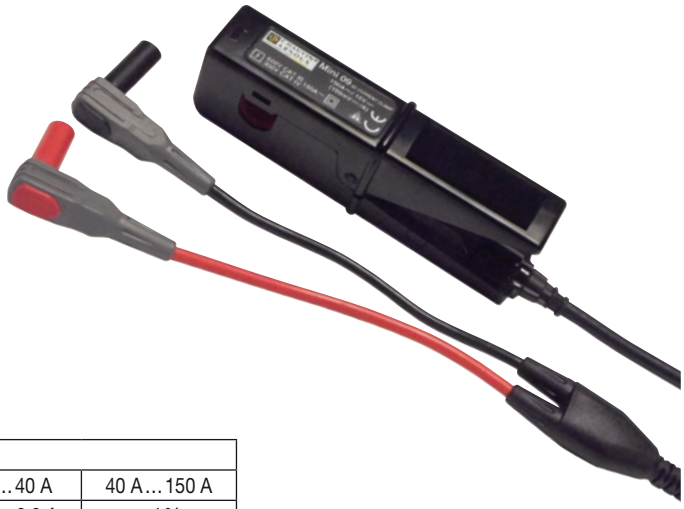

Description

Small and compact, the MINI 09 clamp-on ammeter is the ideal complement for any multimeter to measure AC currents in low-power tertiary or industrial applications.

Its DC voltage output helps to overcome the low sensitivity of certain AC measurement instruments.

Main specifications (1)

Calibre	**150 A**			
Measurement range	1 A…5 A	5 A…15 A	15 A…40 A	40 A…150 A
Accuracy in %	≤ 10 % + 0.2 A	≤ 6 % + 0.2 A	≤ 3 % + 0.2 A	≤ 4 %
Phase shift	Not specified			
Output signal	100 mV DC / A AC (15 V DC at 150 A)			

Output:
Double-insulated cable 1.5 m long, terminated by 2 insulated elbowed male banana connectors Ø 4 mm

Bandwidth: 48 Hz…500 Hz

Clamping capacity:
Cable Ø max 10 mm

Electrical specifications

Maximum currents:
I < 150 A permanent from 65 Hz…500 Hz

Influence of temperature:
≤ 0.2 % per 10 K

Influence of adjacent conductor:
≤ 2 mA/A at 50 Hz

Influence of conductor position in jaws:
≤ 0.1 % at 50/60 Hz

Influence of frequency:
≤ 3 % from 65 Hz to 500 Hz

Mechanical specifications

Operating temperature:
-10 °C to +50 °C

Storage temperature:
-40 °C to +80 °C

Relative humidity for operation:
0 to 85% RH decreasing linearly above 35 °C

Operating altitude:
0 to 2,000 m

Casing protection rating (leakproofing):
IP40 (2) (EN 60529 Ed.1995)

Fall height: 1.5 m (IEC 68-2-32)

Shock protection:
100 g / 6 ms / half-period (IEC 68-2-27)

Vibration resistance (3):
5-15 Hz (1.5 mm), 15-25 Hz (1 mm), 25-55 Hz (0.25 mm) (IEC 68-2-6)

Self-extinguishing capability:
casing UL94 V2

Dimensions: 130 x 37 x 25 mm

Weight: approx. 180 g

Colours: black casing

Safety specifications

Electrical safety:
Instrument with double insulation or reinforced insulation between the primary, the secondary and the grippable part located under the guard as per EN 61010-1 Ed. 2:2001, EN 61010-2-031 Ed. 2002 & EN 61010-2-032 Ed. 2003
- 600 V category III, pollution degree 2
- 300 V category IV, pollution degree 2

Electromagnetic compatibility:
CE-certified equipment compliant with standard EN61326-1 (Ed. 97) + A1 (Ed. 98) + A2 (Ed. 01)
- Emission: stipulations for Class B equipment (domestic use).
- Immunity: stipulations for equipment used intermittently on industrial sites.

(1) Conditions of reference: 23 °C ± 3 °K, 20 to 75 % RH, sinusoidal signal with frequency of 48 Hz to 500 Hz, distortion factor < 1 % with no DC component, external DC magnetic field < 40 A/m, no external AC magnetic field, no external conductor with circulating current, conductor centred for measurement, measurement instrument load impedance ≥ 50 kΩ.
(2) With clamp closed.
(3) Vibrations expressed in mm peak, scanning of 1 octave/minute for 10 minutes on 3 axes.

To order	Reference
MINI 09 clamp-on AC ammeter with operating manual	P01105109Z