One-Time General Purpose Fuses NON and NOS

250 and 600 Volts, ⅛ to 600 Amps



Catalog Symbol: NON (250V); NOS (600V)
For general purpose application
Ampere Rating: ⅛ to 600 Amperes
Voltage Rating: 250 and 600 Volts AC (or less)
Non-Current-Limiting
Interrupting Rating: 50,000A RMS Sym. (1-60A), 10,000A (70-600A)†
Agency Approval:
U.L. Listed, 250 Vac Class K5 (0-60A)*, Class H (70-600A)†
600 Vac Class K5 (0-60A)*, Class H (70-600A)†
(65-100A) Class H 125 Vdc NON Only
U.L. Guide JDDZ, File E4274
CSA Certified, Class 1421-01, File 53787
*Std. 248-9
†Std. 248-6

Catalog Numbers—NON ONE-TIME (250 Volts AC)

NON-⅛	NON-5	NON-40	NON-175
NON-½	NON-6	NON-45	NON-200
NON-¾	NON-6¼	NON-50	NON-225
NON-8/10	NON-7	NON-60	NON-250
NON-1	NON-8	NON-65	NON-300
NON-1¼	NON-9	NON-70	NON-350
NON-1½	NON-10	NON-75	NON-400
NON-1 6/10	NON-12	NON-80	NON-450
NON-2	NON-15	NON-90	NON-500
NON-2½	NON-20	NON-100	NON-600
NON-3	NON-25	NON-110	—
NON-3 3/10	NON-30	NON-125	—
NON-4	NON-35	NON-150	—

Carton Quantity and Weight—NON ONE-TIME (250 Volts AC)

Catalog Number	Carton Qty.	Weight** Lbs.	Kg.
NON ⅛–30	10	0.38	0.172
NON 35–60	10	1.00	0.453
NON 65–100	5	0.79	0.358
NON 110–200	1	0.79	0.358
NON 225–400	1	1.65	0.748
NON 450–600	1	2.76	1.251

NON -(1/8-60 is rated at 125 Vdc with 50,000 AIC Rating.
NON -(65-100) is rated at 125 Vdc with 10,000 AIC Rating.

**Weight per carton.

Dimensions

All diameters (± 0.008)

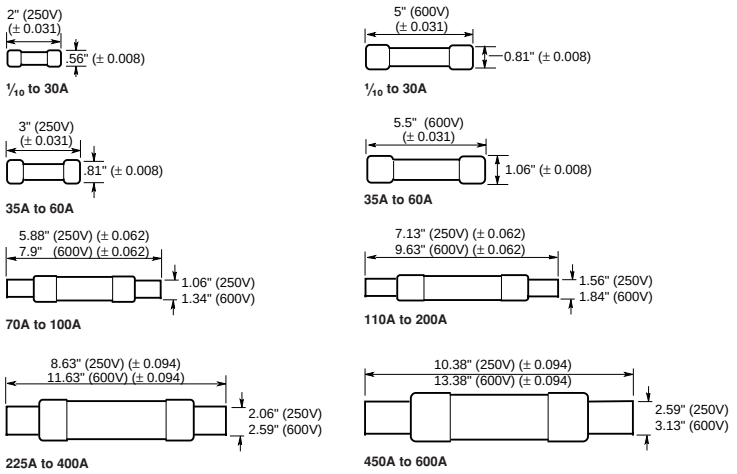

General Information:

- Protect lighting, heating and other circuits not subject to temporary surges and where available short-circuit currents are relatively low.
- ONE-TIME fuses do not have any appreciable degree of time-delay and thus should not be specified in circuits where large transients or motor overloads occur. Use Buss FUSETRON® or LOW-PEAK® dual-element, time-delay fuses.
- For general purpose circuits, size at ampere rating of circuit.
- For motor circuits, size at 300% to 400%.

Catalog Numbers—NOS ONE-TIME (600 Volts AC)

NOS-1	NOS-12	NOS-70	NOS-225
NOS-2	NOS-15	NOS-75	NOS-250
NOS-3	NOS-20	NOS-80	NON-300
NOS-4	NOS-25	NOS-90	NOS-350
NOS-5	NOS-30	NOS-100	NOS-400
NOS-6	NOS-35	NOS-110	NOS-450
NOS-7	NOS-40	NOS-125	NOS-500
NOS-8	NOS-45	NOS-150	NOS-600
NOS-9	NOS-50	NOS-175	—
NOS-10	NOS-60		

Carton Quantity and Weight—NOS ONE-TIME (600 Volts AC)

Catalog Number	Carton Qty.	Weight** Lbs.	Kg.
NOS 1–30	10	1.45	0.657
NOS 35–60	10	2.6	1.179
NOS 70–100	5	2.80	1.270
NOS 110–200	1	1.24	0.562
NOS 225–400	1	3.03	1.374
NOS 450–600	1	4.63	2.100

**Weight per carton.

CE CE logo denotes compliance with European Union Low Voltage Directive (50-1000 Vac, 75-1500 Vdc). Refer to BIF document #8002 or contact Bussmann Application Engineering at 636-527-1270 for more information. Applies to OPM-1038 and OPM-1038R.

One-Time General Purpose Fuses NON and NOS

250 and 600 Volts, ⅛ to 600 Amps

Time-Current Characteristic Curves–Average Melt

NON ONE-TIME (250 Volts AC)

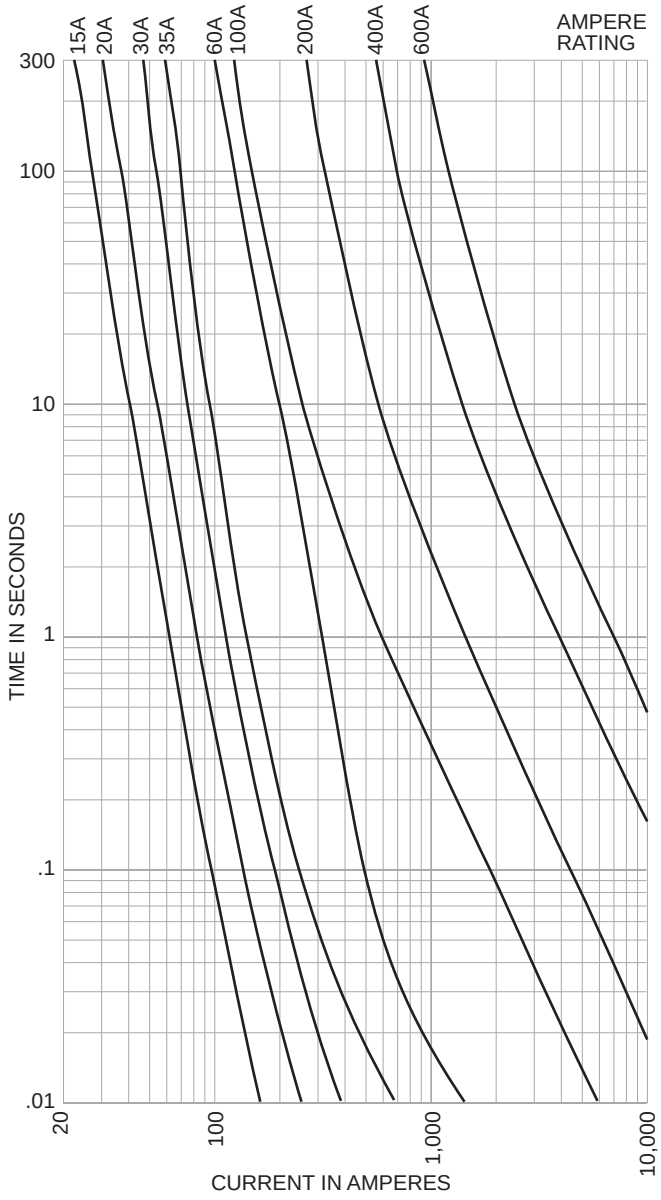

NOS ONE-TIME (600 Volts AC)

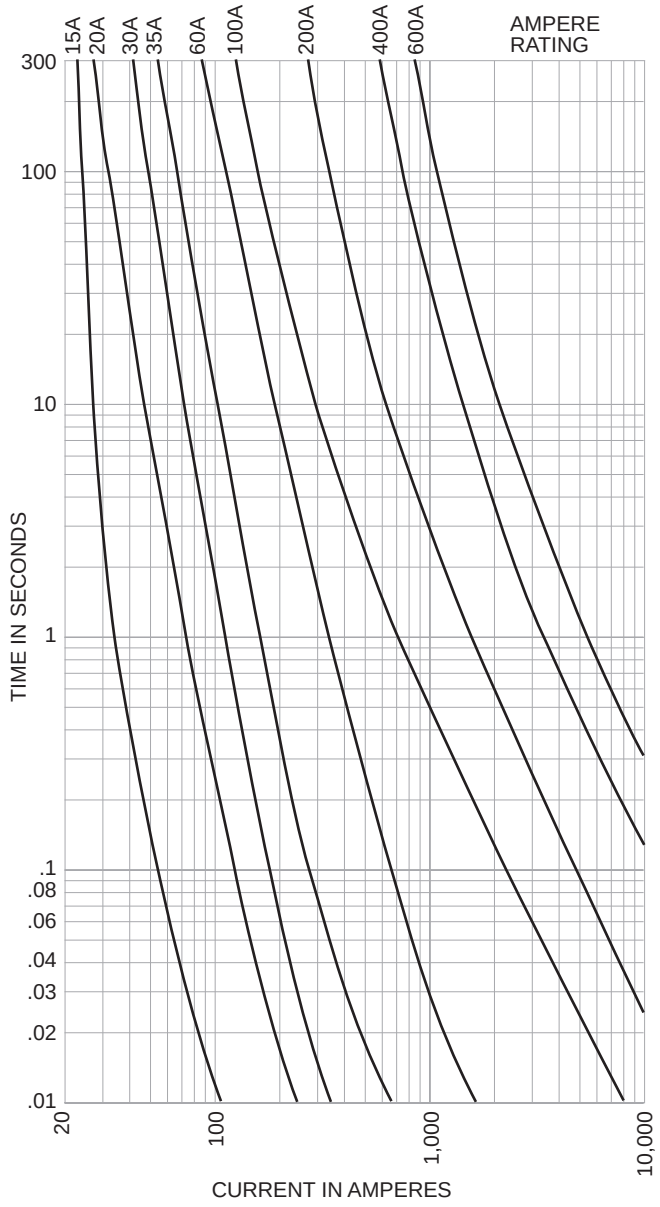

The only controlled copy of this BIF document is the electronic read-only version located on the Bussmann Network Drive. All other copies of this document are by definition uncontrolled. This bulletin is intended to clearly present comprehensive product data and provide technical information that will help the end user with design applications. Bussmann reserves the right, without notice, to change design or construction of any products and to discontinue or limit distribution of any products. Bussmann also reserves the right to change or update, without notice, any technical information contained in this bulletin. Once a product has been selected, it should be tested by the user in all possible applications.