NE555
SA555 - SE555

GENERAL PURPOSE SINGLE BIPOLAR TIMERS

- LOW TURN OFF TIME
- MAXIMUM OPERATING FREQUENCY GREATER THAN 500kHz
- TIMING FROM MICROSECONDS TO HOURS
- OPERATES IN BOTH ASTABLE AND MONOSTABLE MODES
- HIGH OUTPUT CURRENT CAN SOURCE OR SINK 200mA
- ADJUSTABLE DUTY CYCLE
- TTL COMPATIBLE
- TEMPERATURE STABILITY OF 0.005% PER^{O}C

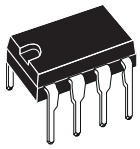

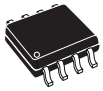

N
DIP8
(Plastic Package)

D
SO8
(Plastic Micropackage)

DESCRIPTION

The NE555 monolithic timing circuit is a highly stable controller capable of producing accurate time delays or oscillation. In the time delay mode of operation, the time is precisely controlled by one external resistor and capacitor. For a stable operation as an oscillator, the free running frequency and the duty cycle are both accurately controlled with two external resistors and one capacitor. The circuit may be triggered and reset on falling waveforms, and the output structure can source or sink up to 200mA. The NE555 is available in plastic and ceramic minidip package and in a 8-lead micropackage and in metal can package version.

ORDER CODES

Part Number	Temperature Range	Package	
		N	D
NE555	0°C, 70°C	•	•
SA555	–40°C, 105°C	•	•
SE555	–55°C, 125°C	•	•

PIN CONNECTIONS (top view)

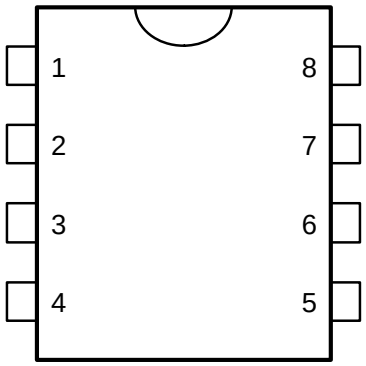

1 - GND
2 - Trigger
3 - Output
4 - Reset
5 - Control voltage
6 - Threshold
7 - Discharge
8 - V_{CC}

BLOCK DIAGRAM

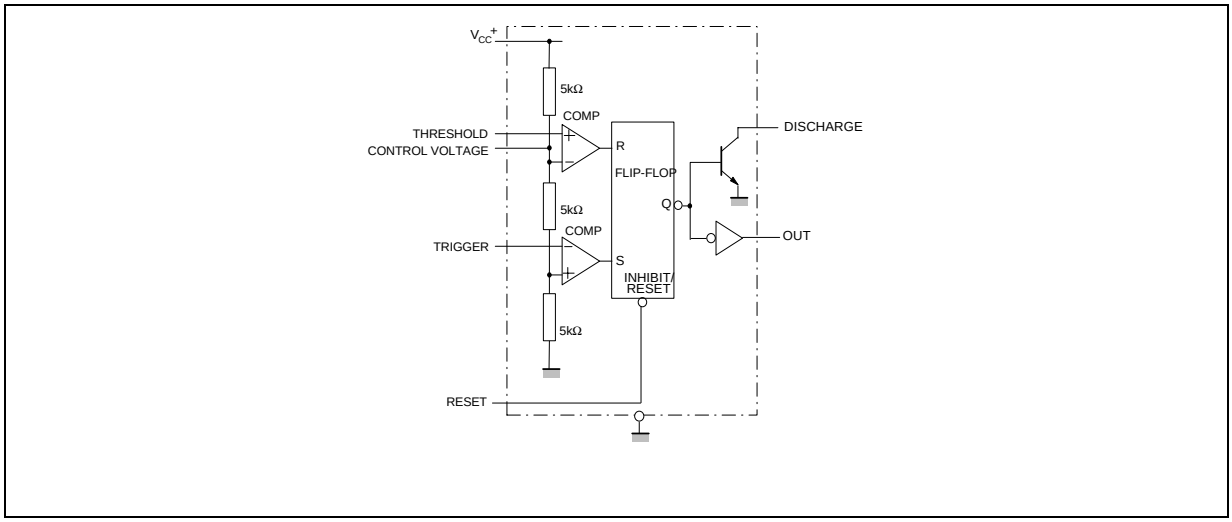

SCHEMATIC DIAGRAM

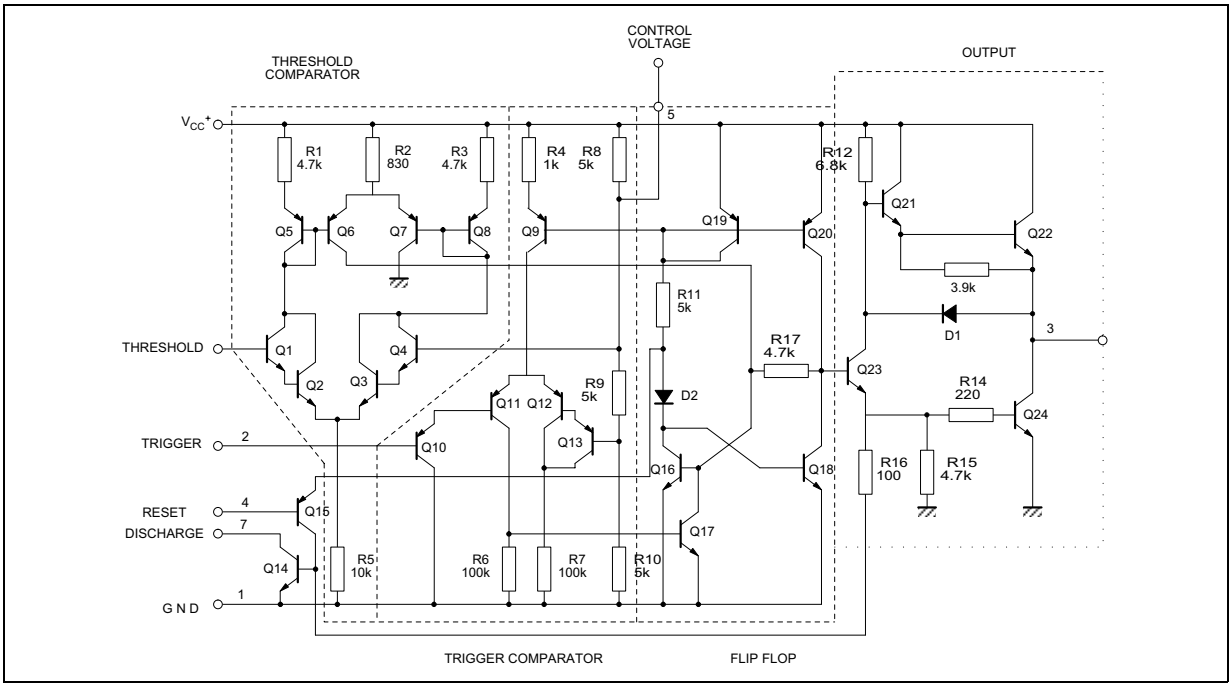

ABSOLUTE MAXIMUM RATINGS

Symbol	Parameter		Value	Unit
V_{cc}	Supply Voltage		18	V
T_{oper}	Operating Free Air Temperature Range	for NE555 for SA555 for SE555	0 to 70 –40 to 105 –55 to 125	^oC
T_j	Junction Temperature		150	^oC
T_{stg}	Storage Temperature Range		–65 to 150	^oC

OPERATING CONDITIONS

Symbol	Parameter	SE555	NE555 - SA555	Unit
V_{CC}	Supply Voltage	4.5 to 18	4.5 to 18	V
V_{th}, V_{trig}, V_{cl}, V_{reset}	Maximum Input Voltage	V_{CC}	V_{CC}	V

ELECTRICAL CHARACTERISTICS

T_{amb} = +25°C, V_{CC} = +5V to +15V (unless otherwise specified)

Symbol	Parameter	SE555			NE555 - SA555			Unit
		Min.	Typ.	Max.	Min.	Typ.	Max.	
I_{CC}	Supply Current (R_L ∞) (- note 1) Low State V_{CC} = +5V V_{CC} = +15V High State V_{CC} = 5V		 3 10 2	 5 12		 3 10 2	 6 15	mA
	Timing Error (monostable) (R_A = 2k to 100kΩ, C = 0.1µF) Initial Accuracy - (note 2) Drift with Temperature Drift with Supply Voltage		 0.5 30 0.05	 2 100 0.2		 1 50 0.1	 3 0.5	 % ppm/°C %/V
	Timing Error (astable) (R_A, R_B = 1kΩ to 100kΩ, C = 0.1µF, V_{CC} = +15V) Initial Accuracy - (note 2) Drift with Temperature Drift with Supply Voltage		 1.5 90 0.15			 2.25 150 0.3		 % ppm/°C %/V
V_{CL}	Control Voltage level V_{CC} = +15V V_{CC} = +5V	 9.6 2.9	 10 3.33	 10.4 3.8	 9 2.6	 10 3.33	 11 4	V
V_{th}	Threshold Voltage V_{CC} = +15V V_{CC} = +5V	 9.4 2.7	 10 3.33	 10.6 4	 8.8 2.4	 10 3.33	 11.2 4.2	V
I_{th}	Threshold Current - (note 3)		0.1	0.25		0.1	0.25	µA
V_{trig}	Trigger Voltage V_{CC} = +15V V_{CC} = +5V	 4.8 1.45	 5 1.67	 5.2 1.9	 4.5 1.1	 5 1.67	 5.6 2.2	V
I_{trig}	Trigger Current (V_{trig} = 0V)		0.5	0.9		0.5	2.0	µA
V_{reset}	Reset Voltage - (note 4)	0.4	0.7	1	0.4	0.7	1	V
I_{reset}	Reset Current V_{reset} = +0.4V V_{reset} = 0V		 0.1 0.4	 0.4 1		 0.1 0.4	 0.4 1.5	mA
V_{OL}	Low Level Output Voltage V_{CC} = +15V, $I_{O(sink)}$ = 10mA $I_{O(sink)}$ = 50mA $I_{O(sink)}$ = 100mA $I_{O(sink)}$ = 200mA V_{CC} = +5V, $I_{O(sink)}$ = 8mA $I_{O(sink)}$ = 5mA		 0.1 0.4 2 2.5 0.1 0.05	 0.15 0.5 2.2 0.25 0.2		 0.1 0.4 2 2.5 0.3 0.25	 0.25 0.75 2.5 0.4 0.35	V
V_{OH}	High Level Output Voltage V_{CC} = +15V, $I_{O(source)}$ = 200mA $I_{O(source)}$ = 100mA V_{CC} = +5V, $I_{O(source)}$ = 100mA	 13 3	 12.5 13.3 3.3		 12.75 2.75	 12.5 13.3 3.3		V

Notes : 1. Supply current when output is high is typically 1mA less.
2. Tested at V_{CC} = +5V and V_{CC} = +15V.
3. This will determine the maximum value of R_A + R_B for +15V operation the max total is R = 20MΩ and for 5V operation the max total R = 3.5MΩ.

ELECTRICAL CHARACTERISTICS (continued)

Symbol	Parameter	SE555			NE555 - SA555			Unit
		Min.	Typ.	Max.	Min.	Typ.	Max.	
$I_{dis(off)}$	Discharge Pin Leakage Current (output high) (V_{dis} = 10V)		20	100		20	100	nA
$V_{dis(sat)}$	Discharge pin Saturation Voltage (output low) - (note 5) V_{CC} = +15V, I_{dis} = 15mA V_{CC} = +5V, I_{dis} = 4.5mA		 180 80	 480 200		 180 80	 480 200	mV
t_r t_f	Output Rise Time Output Fall Time		100 100	200 200		100 100	300 300	ns
t_{off}	Turn off Time - (note 6) (V_{reset} = V_{CC})		0.5			0.5		µs

Notes : 5. No protection against excessive Pin 7 current is necessary, providing the package dissipation rating will not be exceeded.
6. Time mesaured from a positive going input pulse from 0 to 0.8x V_{CC} into the threshold to the drop from high to low of the output trigger is tied to treshold.

Figure 1 : Minimum Pulse Width Required for Trigering

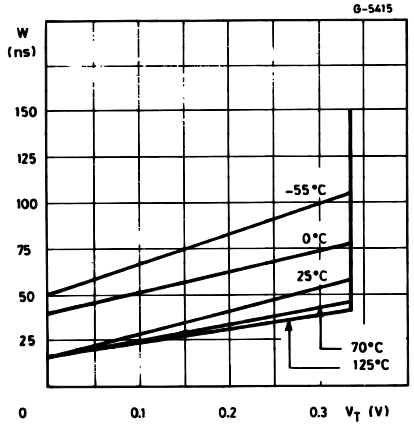

Figure 2 : Supply Current versus Supply Voltage

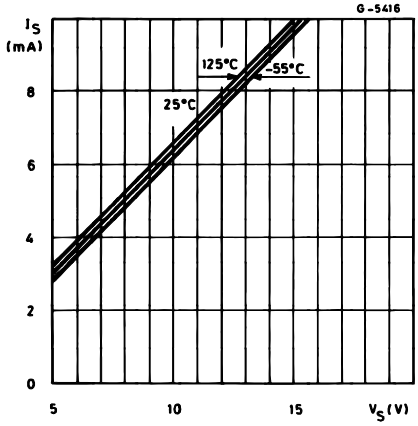

Figure 3 : Delay Time versus Temperature

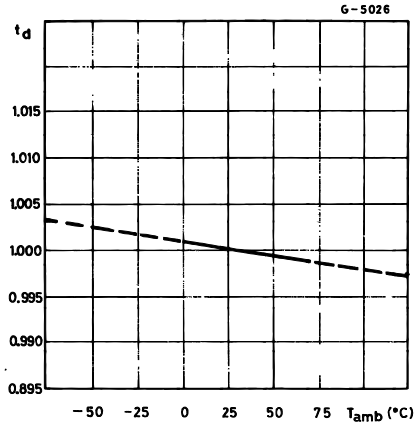

Figure 4 : Low Output Voltage versus Output Sink Current

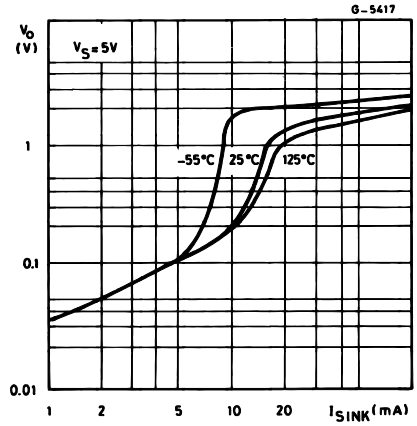

Figure 5 : Low Output Voltage versus Output Sink Current

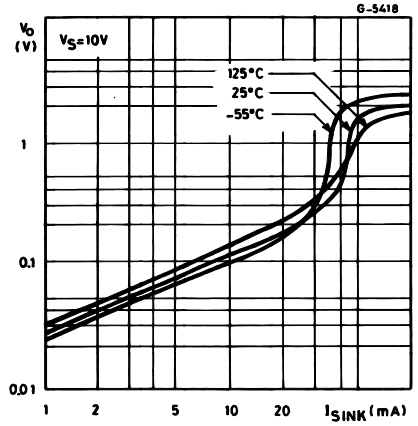

Figure 6 : Low Output Voltage versus Output Sink Current

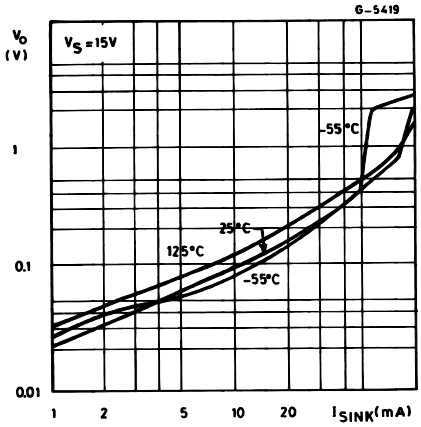

Figure 7 : High Output Voltage Drop versus Output

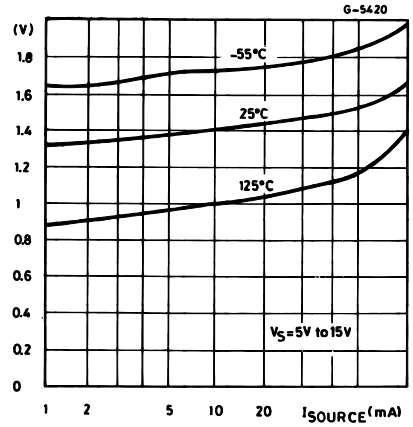

Figure 8 : Delay Time versus Supply Voltage

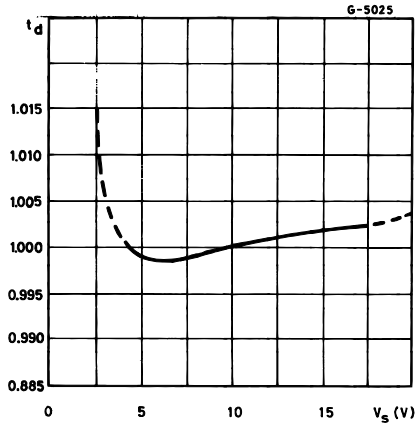

Figure 9 : Propagation Delay versus Voltage Level of Trigger Value

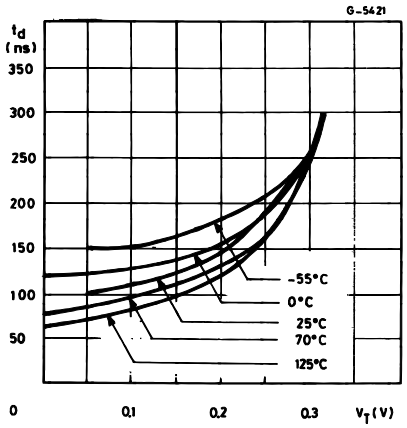

APPLICATION INFORMATION

MONOSTABLE OPERATION

In the monostable mode, the timer functions as a one-shot. Referring to figure 10 the external capacitor is initially held discharged by a transistor inside the timer.

Figure 10

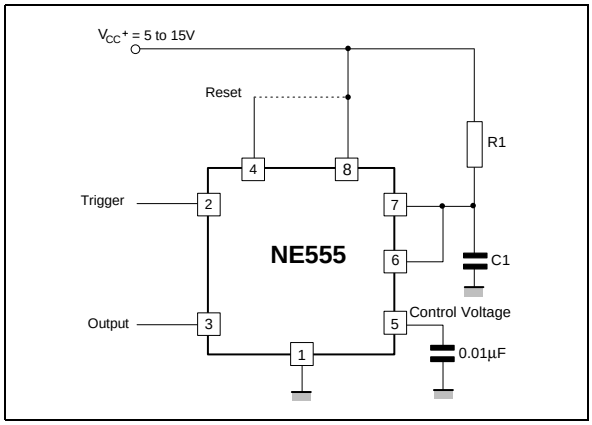

The circuit triggers on a negative-going input signal when the level reaches 1/3 Vcc. Once triggered, the circuit remains in this state until the set time has elapsed, even if it is triggered again during this interval. The duration of the output HIGH state is given by $t = 1.1\ R_1C_1$ and is easily determined by figure 12.

Notice that since the charge rate and the threshold level of the comparator are both directly proportional to supply voltage, the timing interval is independent of supply. Applying a negative pulse simultaneously to the reset terminal (pin 4) and the trigger terminal (pin 2) during the timing cycle discharges the external capacitor and causes the cycle to start over. The timing cycle now starts on the positive edge of the reset pulse. During the time the reset pulse in applied, the output is driven to its LOW state.

When a negative trigger pulse is applied to pin 2, the flip-flop is set, releasing the short circuit across the external capacitor and driving the output HIGH. The voltage across the capacitor increases exponentially with the time constant $\tau = R_1C_1$. When the voltage across the capacitor equals 2/3 V_{cc}, the comparator resets the flip-flop which then discharge the capacitor rapidly and drivers the output to its LOW state.

Figure 11 shows the actual waveforms generated in this mode of operation.

When Reset is not used, it should be tied high to avoid any possibly or false triggering.

Figure 11

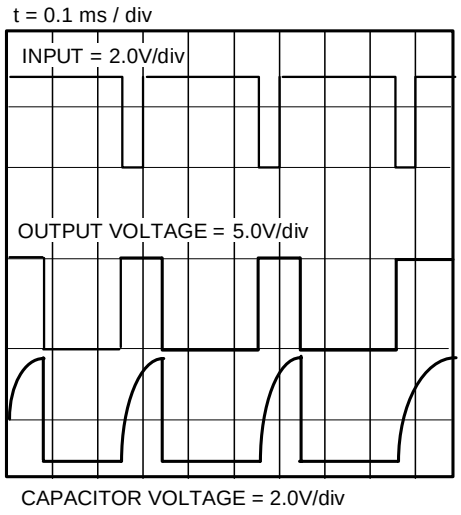

$R1 = 9.1k\Omega$, $C1 = 0.01\mu F$, $R_L = 1k\Omega$

Figure 12

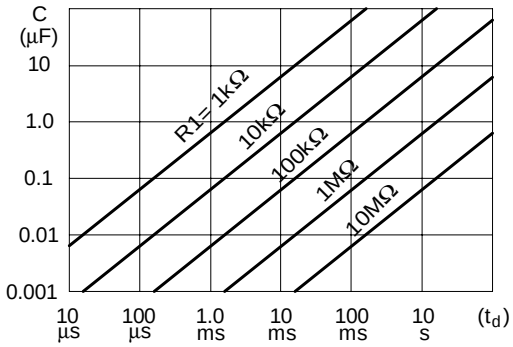

ASTABLE OPERATION

When the circuit is connected as shown in figure 13 (pin 2 and 6 connected) it triggers itself and free runs as a multivibrator. The external capacitor charges through R_1 and R_2 and discharges through R_2 only. Thus the duty cycle may be precisely set by the ratio of these two resistors.

In the astable mode of operation, C_1 charges and discharges between 1/3 V_{cc} and 2/3 Vcc. As in the triggered mode, the charge and discharge times and therefore frequency are independent of the supply voltage.

Figure 13

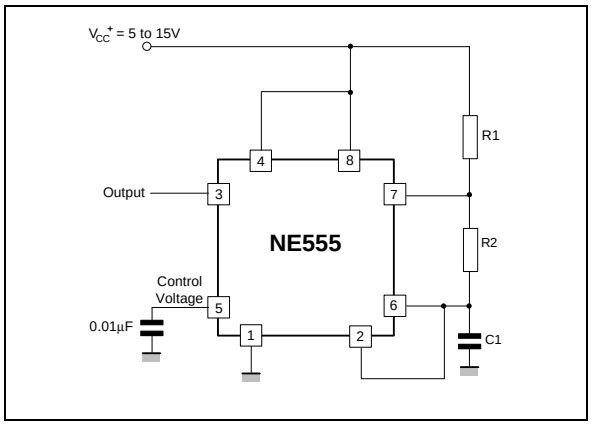

Figure 14 shows actual waveforms generated in this mode of operation.
The charge time (output HIGH) is given by :
$t_1 = 0.693 (R_1 + R_2) C_1$
and the discharge time (output LOW) by :
$t_2 = 0.693 (R_2) C_1$
Thus the total period T is given by :
$T = t_1 + t_2 = 0.693 (R_1 + 2R_2) C_1$
The frequency ofoscillation is them :

$$f = \frac{1}{T} = \frac{1.44}{(R_1 + 2R_2)\, C_1}$$

and may be easily found by figure 15.
The duty cycle is given by :

$$D = \frac{R_2}{R_1 + 2R_2}$$

Figure 14

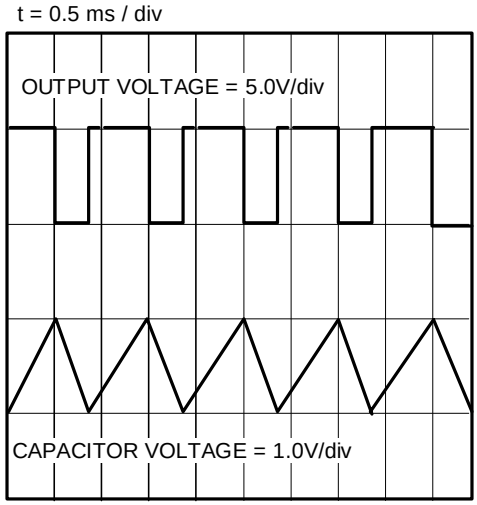

R1 = R2 = 4.8kΩ, C1= 0.1µF, R_L = 1kΩ

Figure 15 : Free Running Frequency versus R_1, R_2 and C_1

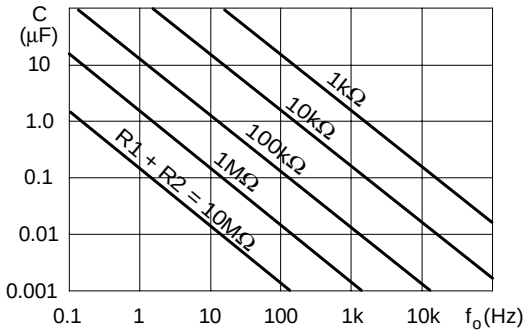

PULSE WIDTH MODULATOR

When the timer is connected in the monostable mode and triggered with a continuous pulse train, the output pulse width can be modulated by a signal applied to pin 5. Figure 16 shows the circuit.

Figure 16 : Pulse Width Modulator.

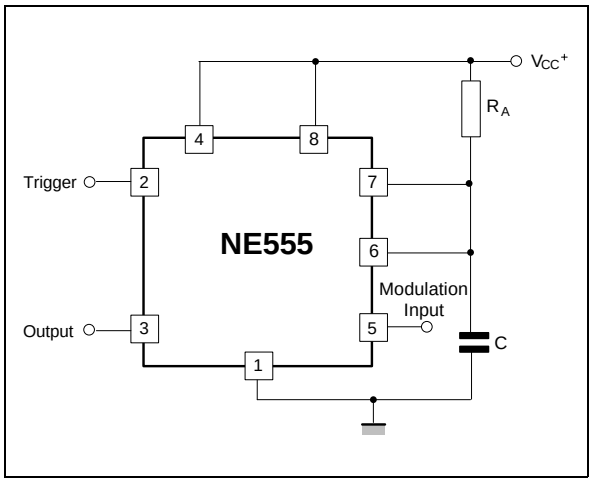

LINEAR RAMP

When the pullup resistor, R_A, in the monostable circuit is replaced by a constant current source, a linear ramp is generated. Figure 17 shows a circuit configuration that will perform this function.

Figure 17.

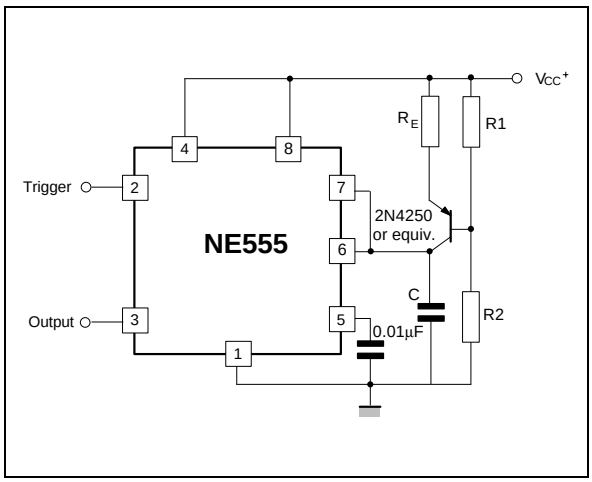

Figure 18 shows waveforms generator by the linear ramp.

The time interval is given by :

$$T = \frac{(2/3\ V_{CC}\ R_E\ (R_{1+}\ R_{2)})\ C}{R_1\ V_{CC} - V_{BE}\ (R_{1+}\ R_{2)}} \quad V_{BE} = 0.6V$$

Figure 18 : Linear Ramp.

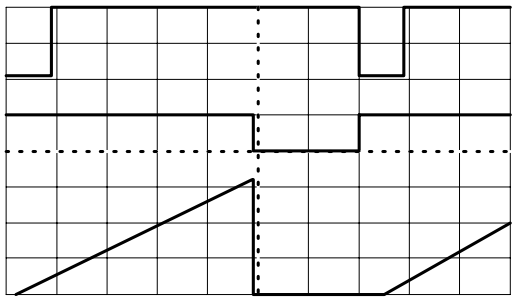

V_{CC} = 5V
Time = 20µs/DIV
R_1 = 47kΩ
R_2 = 100kΩ
R_E = 2.7kΩ
C = 0.01µF

Top trace : input 3V/DIV
Middle trace : output 5V/DIV
Bottom trace : output 5V/DIV
Bottom trace : capacitor voltage 1V/DIV

50% DUTY CYCLE OSCILLATOR

For a 50% duty cycle the resistors R_A and R_E may be connected as in figure 19. The time preriod for the output high is the same as previous,

$t_1 = 0.693\ R_A\ C$.

For the output low it is t_2 =

$$[(R_A R_B)/(R_A + R_B)]\ C \mathrm{Ln}\left[\frac{R_B - 2R_A}{2R_B - R_A}\right]$$

Thus the frequency of oscillation is $f = \frac{1}{t_1 + t_2}$

Note that this circuit will not oscillate if R_B is greater

Figure 19 : 50% Duty Cycle Oscillator.

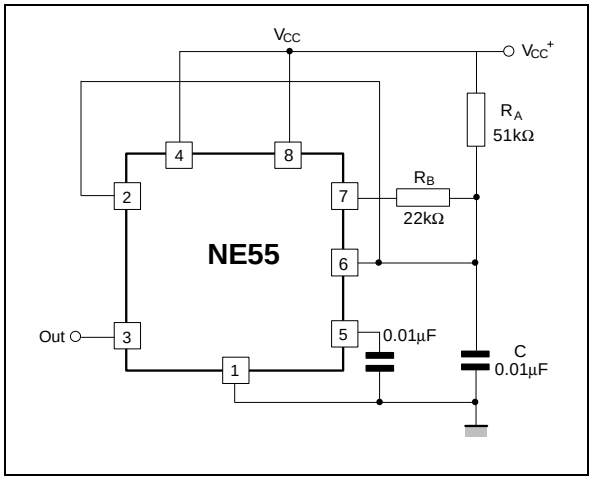

than 1/2 R_A because the junction of R_A and R_B cannot bring pin 2 down to 1/3 V_{CC} and trigger the lower comparator.

ADDITIONAL INFORMATION

Adequate power supply bypassing is necessary to protect associated circuitry. Minimum recommended is 0.1µF in parallel with 1µF electrolytic.

PACKAGE MECHANICAL DATA

8 PINS - PLASTIC DIP

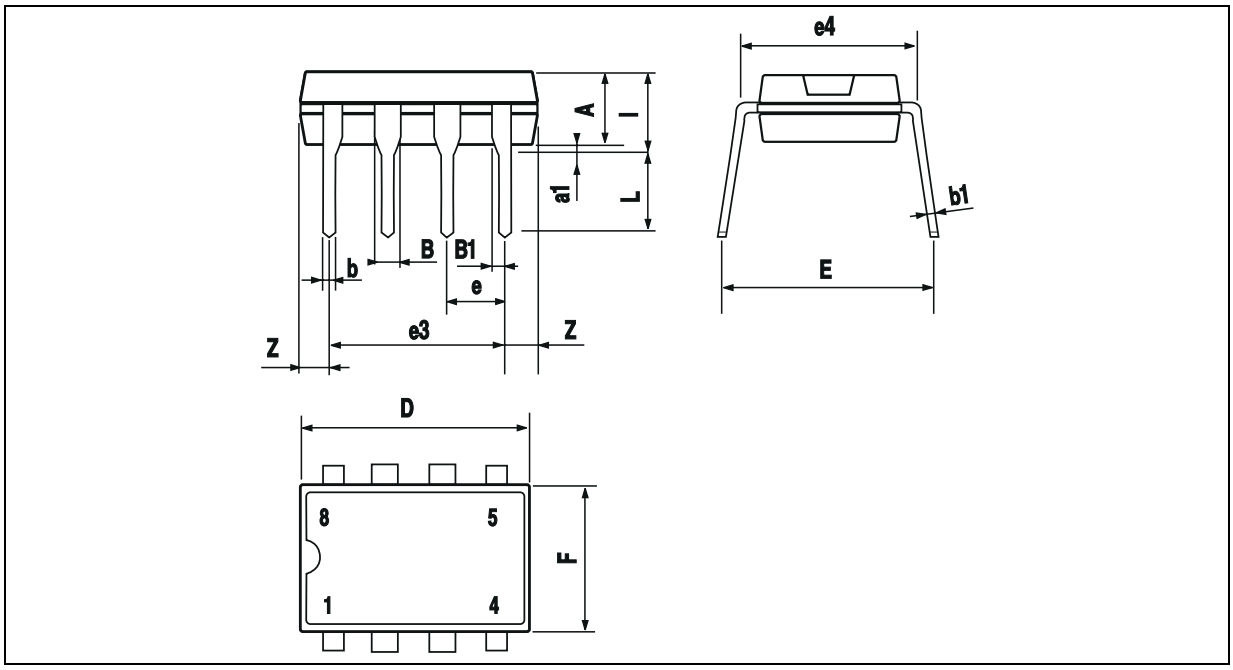

PM-DIP8.EPS

Dimensions	Millimeters			Inches		
	Min.	Typ.	Max.	Min.	Typ.	Max.
A		3.32			0.131	
a1	0.51			0.020		
B	1.15		1.65	0.045		0.065
b	0.356		0.55	0.014		0.022
b1	0.204		0.304	0.008		0.012
D			10.92			0.430
E	7.95		9.75	0.313		0.384
e		2.54			0.100	
e3		7.62			0.300	
e4		7.62			0.300	
F			6.6			0260
i			5.08			0.200
L	3.18		3.81	0.125		0.150
Z			1.52			0.060

DIP8.TBL

PACKAGE MECHANICAL DATA

8 PINS - PLASTIC MICROPACKAGE (SO)

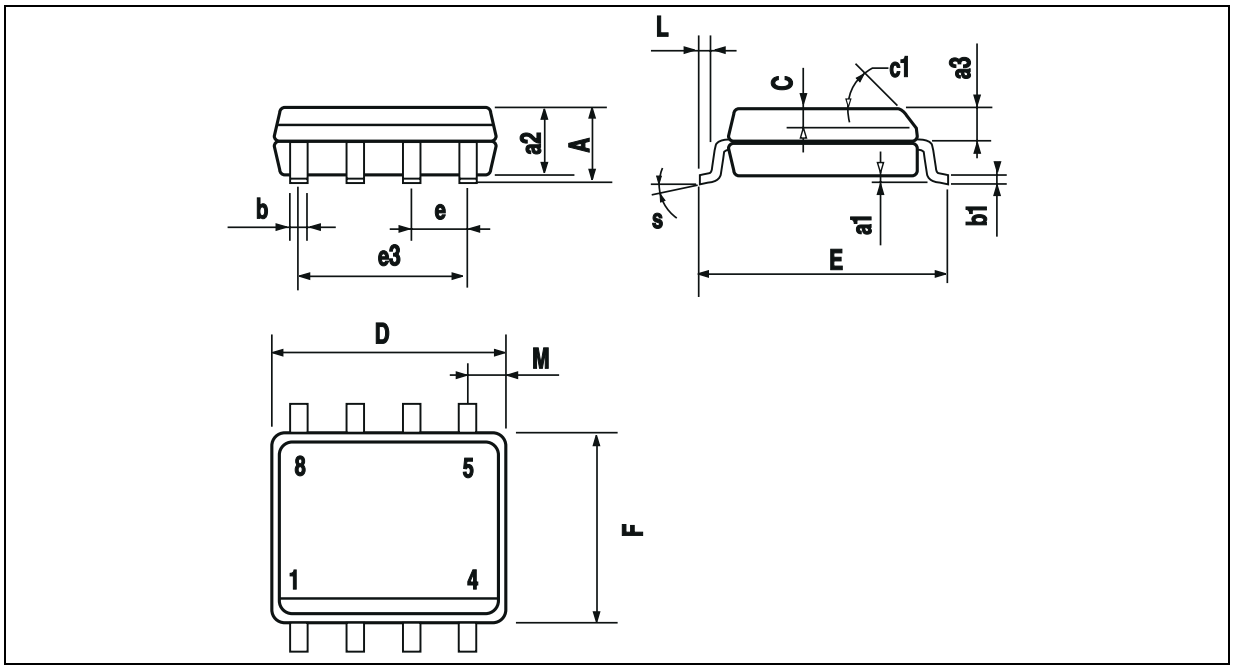

PM-SO8.EPS

Dimensions	Millimeters			Inches		
	Min.	Typ.	Max.	Min.	Typ.	Max.
A			1.75			0.069
a1	0.1		0.25	0.004		0.010
a2			1.65			0.065
a3	0.65		0.85	0.026		0.033
b	0.35		0.48	0.014		0.019
b1	0.19		0.25	0.007		0.010
C	0.25		0.5	0.010		0.020
c1	45° (typ.)					
D	4.8		5.0	0.189		0.197
E	5.8		6.2	0.228		0.244
e		1.27			0.050	
e3		3.81			0.150	
F	3.8		4.0	0.150		0.157
L	0.4		1.27	0.016		0.050
M			0.6			0.024
S	8° (max.)					

SO8.TBL

Information furnished is believed to be accurate and reliable. However, STMicroelectronics assumes no responsibility for the consequences of use of such information nor for any infringement of patents or other rights of third parties which may result from its use. No license is granted by implication or otherwise under any patent or patent rights of STMicroelectronics. Specifications mentioned in this publication are subject to change without notice. This publication supersedes and replaces all information previously supplied. STMicroelectronics products are not authorized for use as critical components in life support devices or systems without express written approval of STMicroelectronics.

© The ST logo is a trademark of STMicroelectronics

© 1998 STMicroelectronics – Printed in Italy – All Rights Reserved
STMicroelectronics GROUP OF COMPANIES
Australia - Brazil - Canada - China - France - Germany - Italy - Japan - Korea - Malaysia - Malta - Mexico - Morocco
The Netherlands - Singapore - Spain - Sweden - Switzerland - Taiwan - Thailand - United Kingdom - U.S.A.

ORDER CODE :