PART NAME	NON-METALLIC ENCLOSURE (STYLE A)	PART No.	NBA-10152 & NBA-10172

MATERIAL:

SOLID BODY & COVER ___ ABS/PC BLENDED PLASTIC
UL94-5VB FLAMMABILITY RATING

CLEAR COVER _____ POLYCARBONATE PLASTIC
UL94V-0 FLAMMABILITY RATING
UV STABILIZED

LATCHES, HINGES &
WALL MOUNTING BRACKETS __ STAINLESS STEEL

FINISH:

BODY _____ LIGHT GRAY
COVER _____ LIGHT GRAY OR CLEAR

COVER INCLUDES GRAY POLY-URETHANE GASKET.

NOTE: UNIT COMES COMPLETE WITH (4) WALL MOUNTING BRKTS. & (4) M5 x 10mm LG. TRUSS HD. MACHINE SCREWS (NOT SHOWN)

INTERNAL HINGED PANEL MOUNTING BRACKETS, AIR & MOISTURE VENTS, STAINLESS STEEL LOCKING HASP AND GALVANIZED STEEL INTERNAL PANEL ARE NOT INCLUDED, BUT CAN BE PURCHASED SEPARATELY.

INDUSTRY STANDARDS:
UL508 TYPE 1, 2, 4, 4X INDOOR, 12 & 13
NEMA TYPE 1, 2, 4, 4X, 12 & 13
IEC529-IP65

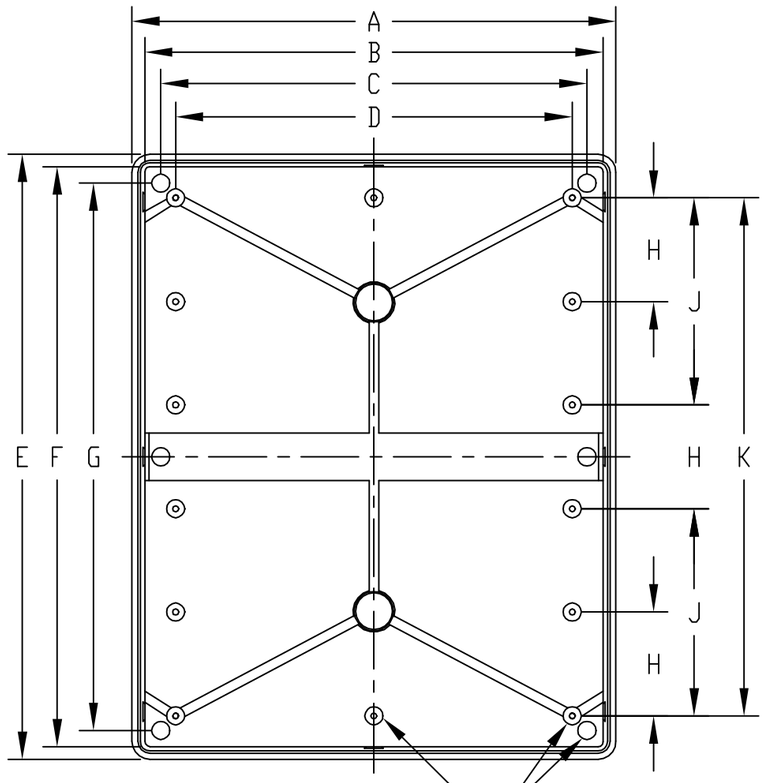

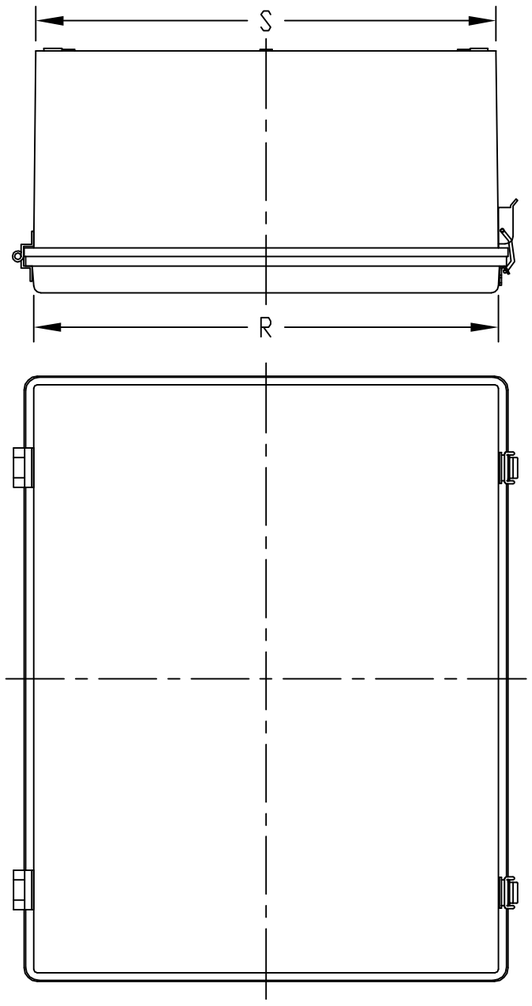

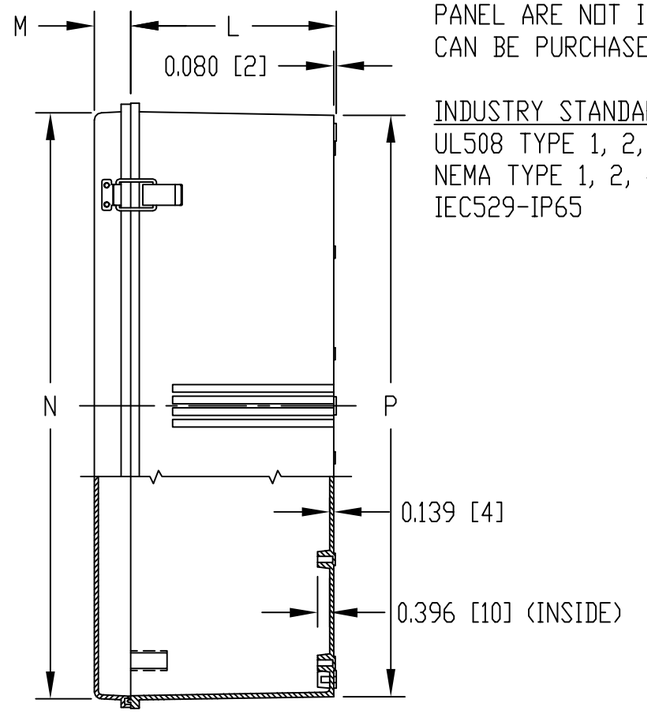

0.590 [15] DIA. BOSS WITH 0.197 [5] DIA. HOLE x 0.425 [11] DEEP (10) PLACES BOSSES ACCEPT M6 METRIC OR 0.250" STD. SHEET METAL SCREWS x 0.375 [9] LG. (NOT SUPPLIED)

VIEW LESS COVER

0.590 [15] DIA. BOSS WITH M5 x 0.8mm THREADED BRASS INSERT (4) PL'S INSIDE AS SHOWN - AND - (6) PL'S OUTSIDE (REFERENCE LOCATION DIMENSIONS "C" AND "G")

DIMENSIONS = INCHES [MILLIMETERS]

NOTE: ALL DIMENSIONS HAVE ±0.039 [±1] TOLERANCE UNLESS OTHERWISE SPECIFIED

PART NO.		DIMENSIONS															
GRAY COVER	CLEAR COVER	A	B	C	D	E	F	G	H	J	K	L	M	N	P	R	S
NBA-10152	NBA-10172	15.742 [400]	14.905 [379]	13.859 [352]	12.900 [328]	19.682 [500]	18.852 [479]	17.796 [452]	3.375 [86]	6.734 [171]	16.843 [428]	6.688 [170]	1.185 [30]	19.065 [484]	18.905 [480]	15.120 [384]	14.965 [380]

Revised 26JUN07

Mouser Electronics

Authorized Distributor

Click to View Pricing, Inventory, Delivery & Lifecycle Information:

Bud Industries:

NBA-10172 NBA-10152