HAMMOND MANUFACTURING

Quality Products. Service Excellence.

Type 1 Mild Steel Small Wallmount Enclosure *N1J Series*

Hinge Door with Quarter Turn



Inner Panel Included

Application

- Designed for indoor use to house controls, instruments and components not requiring oil-tight or dust-tight protection.

Standards

- UL-50 Type 1
- CSA Type 1
- Complies with
  - NEMA Type 1
  - IEC 60529, IP20

Construction

- Formed and spot welded from 16 gauge steel.
- Formed steel covers close by use of slotted quarter turn latch.
- Full swing door using butt hinges.
- Through holes in back for wall mounting.
- Bonding stud is provided on the door and a grounding stud is provided on the box.
- Includes 14 gauge steel inner panel.

Finish

- Enclosure and cover are finished in ANSI 61 gray powder coating.
- Inner panel is finished in white powder coating

Accessories

- Perforated Panels for N1J Series Enclosures
- Type 1 Lock Kit

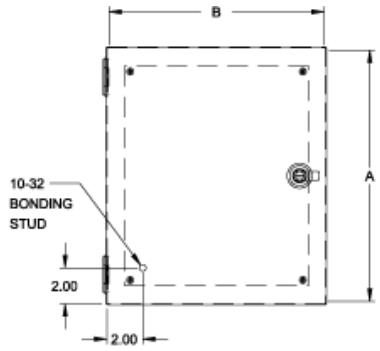

Front View

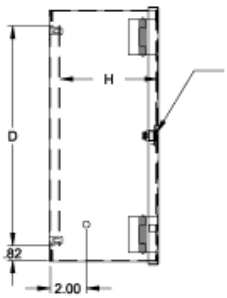

Side View

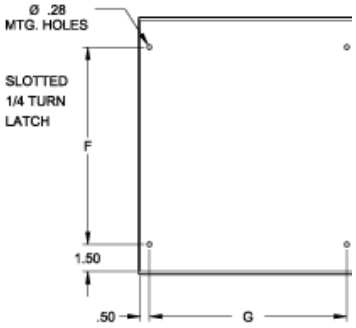

Back View

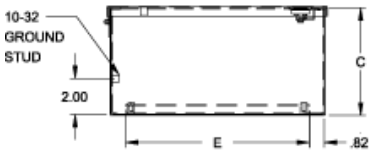

Bottom View

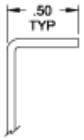

Body Flange Detail

	Overall Dimensions			Panel Size		Centers			Ship Wt.
Part No.	A	B	C	D	E	F	G	H	lbs.
N1J664	6.00	6.00	4.00	4.25	4.25	3.00	5.00	3.43	5
N1J864	8.00	6.00	4.00	6.25	4.25	5.00	5.00	3.43	6
N1J884	8.00	8.00	4.00	6.25	6.25	5.00	7.00	3.43	7
N1J1084	10.00	8.00	4.00	8.25	6.25	7.00	7.00	3.43	8
N1J10104	10.00	10.00	4.00	8.25	8.25	7.00	9.00	3.43	9
N1J12104	12.00	10.00	4.00	10.25	8.25	9.00	9.00	3.43	11
N1J12124	12.00	12.00	4.00	10.25	10.25	9.00	11.00	3.43	13
N1J14124	14.00	12.00	4.00	12.25	10.25	11.00	11.00	3.43	14
N1J886	8.00	8.00	6.00	6.25	6.25	5.00	7.00	5.43	7
N1J1086	10.00	8.00	6.00	8.25	6.25	7.00	7.00	5.43	10
N1J10106	10.00	10.00	6.00	8.25	8.25	7.00	9.00	5.43	11
N1J12106	12.00	10.00	6.00	10.25	8.25	9.00	9.00	5.43	12
N1J12126	12.00	12.00	6.00	10.25	10.25	9.00	11.00	5.43	15
N1J14126	14.00	12.00	6.00	12.25	10.25	11.00	11.00	5.43	16
N1J16126	16.00	12.00	6.00	14.25	10.25	13.00	11.00	5.43	16
N1J20126	20.00	12.00	6.00	18.25	10.25	17.00	11.00	5.43	22
N1J12128	12.00	12.00	8.00	10.25	10.25	9.00	11.00	7.43	17
N1J14128	14.00	12.00	8.00	12.25	10.25	11.00	11.00	7.43	18

Data subject to change without notice

© 2015. Hammond Manufacturing Ltd. All rights reserved.