N1J Series Panel Enclosure

NEMA 1



Inner Panel Included

Application

- Designed for indoor use to house controls, instruments and components not requiring oil-tight or dust-tight protection.

Standards

- UL-50 Type 1
- cUL-Type 1
- **Complies with**
  - NEMA Type 1
  - IEC 60529, IP20

Construction

- Formed and spot welded from 16 gauge steel.
- Formed steel covers close by use of slotted quarter turn latch.
- Full swing door using butt hinges.
- Through holes in back for wall mounting.
- Bonding stud is provided on the door and a grounding stud is provided on the box.
- Includes 14 gauge steel inner panel.

Finish

- Enclosure and cover are finished in ANSI 61 gray powder coating.
- Inner panel is finished in white powder coating

Technical references and DXF downloads available at www.hammfg.com

All dimensions in inches unless specified otherwise

Quality Enclosures. Service Excellence.
© Hammond Manufacturing
Canada: 519.822.2960 or 905.456.3770 USA: 716.630.7030
Data Subject to change without notice

N1J Series Panel Enclosure

NEMA 1

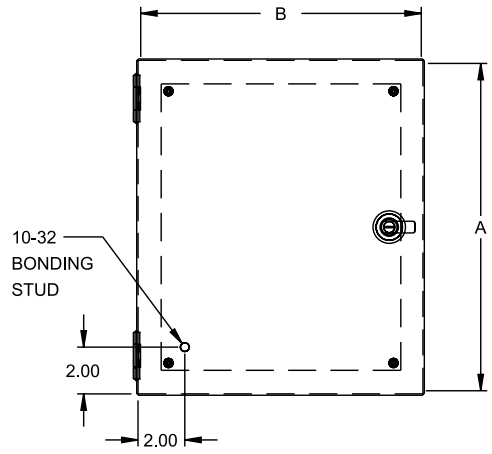

Front View

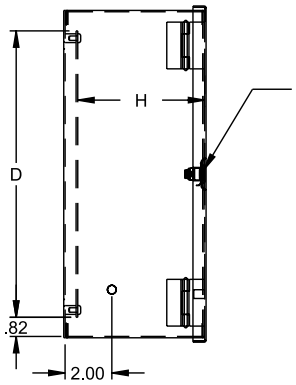

Side View

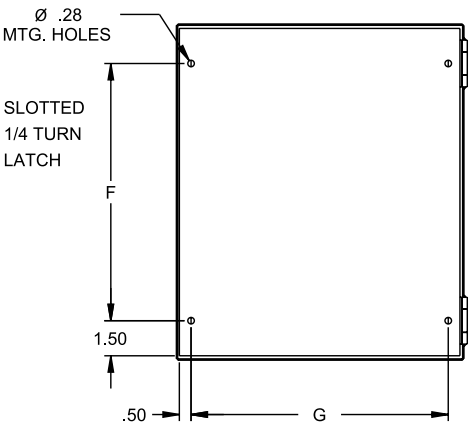

Back View

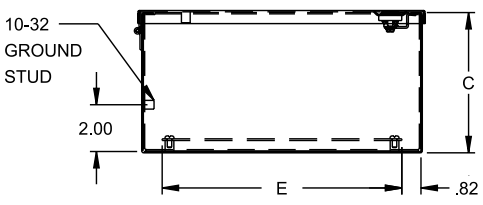

Bottom View

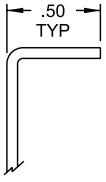

Body Flange Detail

Part No.	Overall Dimensions			Panel Size		Centers			Ship Wt.
	A	B	C	D	E	F	G	H	lbs.
N1J664	6	6	4	4.25	4.25	3.00	5.00	3.43	5
N1J864	8	6	4	6.25	4.25	5.00	5.00	3.43	6
N1J884	8	8	4	6.25	6.25	5.00	7.00	3.43	7
N1J1084	10	8	4	8.25	6.25	7.00	7.00	3.43	8
N1J10104	10	10	4	8.25	8.25	7.00	9.00	3.43	9
N1J12104	12	10	4	10.25	8.25	9.00	9.00	3.43	11
N1J12124	12	12	4	10.25	10.25	9.00	11.00	3.43	13
N1J14124	14	12	4	12.25	10.25	11.00	11.00	3.43	14
N1J886	8	8	6	6.25	6.25	5.00	7.00	5.43	7
N1J1086	10	8	6	8.25	6.25	7.00	7.00	5.43	10
N1J10106	10	10	6	8.25	8.25	7.00	9.00	5.43	11
N1J12106	12	10	6	10.25	8.25	9.00	9.00	5.43	12
N1J12126	12	12	6	10.25	10.25	9.00	11.00	5.43	15
N1J14126	14	12	6	12.25	10.25	11.00	11.00	5.43	16
N1J16126	16	12	6	14.25	10.25	13.00	11.00	5.43	16
N1J20126	20	12	6	18.25	10.25	17.00	11.00	5.43	22
N1J12128	12	12	8	10.25	10.25	9.00	11.00	7.43	17
N1J14128	14	12	8	12.25	10.25	11.00	11.00	7.43	18

Technical references and DXF downloads available at www.hammfg.com

All dimensions in inches unless specified otherwise

© Hammond Manufacturing

Canada: 519.822.2960 or 905.456.3770 USA: 716.630.7030

Data Subject to change without notice

General Accessories
Hardware

Latch Kits for Single Door Type 12 Enclosures

- Designed for field installation on most 1418 Series single door enclosures (does not fit 1418 J Series).
- Available with key locking, padlocking, and non-locking handles.
- Single point kits include a handle and latch cam.
- Three point kits include a handle, latch cam, latch rods and adjustable rod guides.
- Latch rod ends have rollers for easier door closing.
- All parts are plated or painted for corrosion resistance.


AHK1


AHKL1

Non-Locking Handle	Handle Rotation	Locking Handle	Handle Rotation	"Tee" Locking Handle	Description
AHK1	clockwise	**AHKL1**	counter clockwise	**THK1**	1 point latch
AHK2	clockwise	**AHKL2**	counter clockwise	**THK2**	3 point latch 48" and under
AHK3	clockwise	**AHKL3**	counter clockwise	**THK3**	3 point latch 60" and over

Padlocking Handle	Locking & Padlocking Handle	Description
PHK1	**PHKL1**	1 point latch
PHK2	**PHKL2**	3 point latch 48" and under
PHK3	**PHKL3**	3 point latch 60" and over


PHK1


PHKL1

Lock Kit for NEMA 1 Enclosures

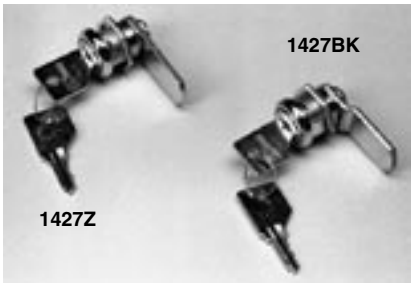



- Installs in place of the existing slotted latch, or in cutout hole provided.
- Reversible cam position for other applications.
- Maintains NEMA1 rating.

Part No.	Fits Enclosure Series
1427LKN1	1420, N1A
1427BK	1439 Flush Mount
1427Z	1439 Surface Mount Kit
N1JLK	N1J, CHKO



Lock Kit for 1418 Type 4 and 12 Enclosures

- Designed for installation on most 1418 Series single door enclosures (does not fit 1418 J Series).
- Requires a drilled or punched hole to receive cylinder lock.
- Internal "0" ring provides dust and water tight construction.
- Maintains NEMA rating.

Part No.	1427LKN4

Technical references and DXF downloads available at www.hammfg.com

All dimensions in inches unless specified otherwise

Quality Enclosures. Service Excellence.
© Hammond Manufacturing
Canada: 519.822.2960 or 905.456.3770 USA: 716.630.7030
Data Subject to change without notice