Pushbutton Enclosures - NEMA 12, 13

Miniature Pushbutton MPB Series



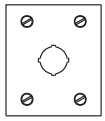

MPB1

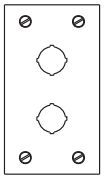

MPB2

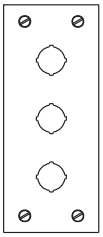

MPB3

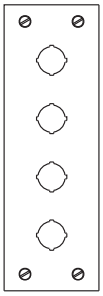

MPB4

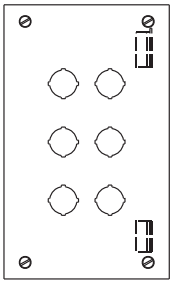

MPB6

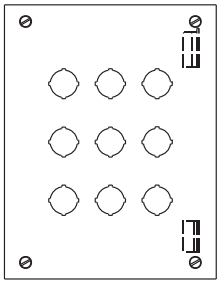

MPB9

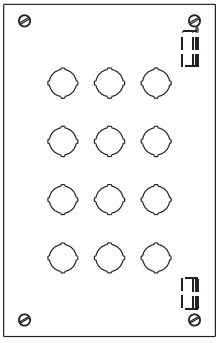

MPB12

Application

- Designed to accept 22mm miniature oil tight pushbuttons, switches and pilot lights.
- Provides protection from dirt, dust, oil and water.

Standards

- UL 508 Type 12 and 13
- CSA Type 12 and 13
- **Complies with**
  - NEMA Type 12 and 13
  - JIC EMP-1-1967
  - JIC EGP-1-1967
  - IEC 60529, IP54
- Appropriate components are required to maintain these standards.

Construction

- Formed 14 gauge steel except the MPB1 which is 16 gauge.
- Smooth continuously welded seams.
- Welded brackets provide for enclosure mounting.
- Captive cover screws thread into sealed wells.
- Larger enclosures provide internally hinged removable covers, designed to hold the cover open during wiring (see table).
- Oil resistant gasket and adhesive.
- A bonding stud is provided on the door and a grounding stud is provided on the enclosure.

Finish

- Cover and enclosure are phosphatized and finished in ANSI 61 gray powder coating.

Accessories

- Hole plugs...*see page* ***435***
- Pedestals...*see page* ***454***

Technical references and CAD downloads available at www.hammondmfg.com

All dimensions in inches unless specified otherwise

Quality Products. Service Excellence.

© Hammond Manufacturing

Canada: 519.822.2960 or 905.456.3770 USA: 716.630.7030

Data Subject to change without notice

Pushbutton Enclosures - NEMA 12, 13

Miniature Pushbutton MPB Series

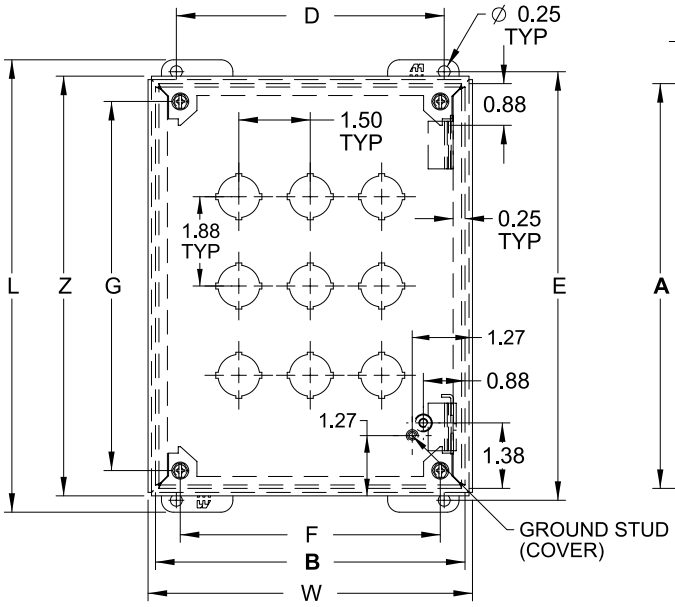

Front View
Body Type MPB6 through MPB12
(Hinged)

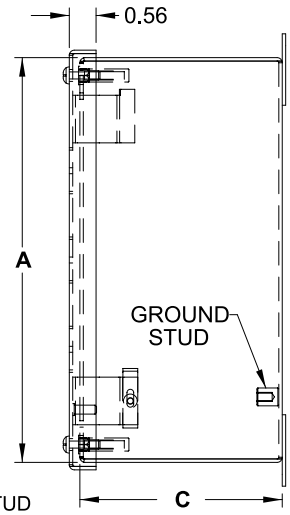

Side View

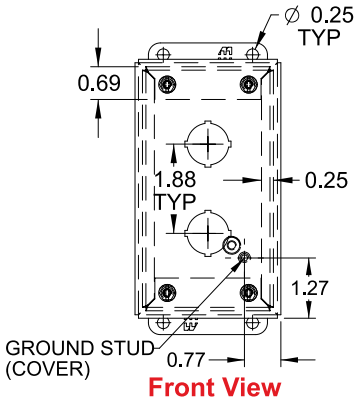

Front View
Body Type MPB1 through MPB4
(Not Hinged)

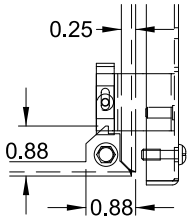

Hinge Detail
Retractable pin allows door to be
mounted on left or right side

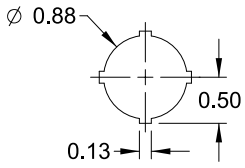

22.5mm Detail

Part No.	No. of Holes	A	B	C	D	E	F	G	Overall Dimensions L	W	Z	Ship Wt. lbs.
MPB1[1]	1	3.25	2.75	3.50	1.88	3.75	1.71	2.50	4.25	3.06	3.56	2
MPB2[1]	2	5.13	2.75	3.50	1.88	5.63	1.71	4.38	6.13	3.06	5.44	3
MPB3[1]	3	7.00	2.75	3.50	1.88	7.50	1.71	6.25	8.00	3.06	7.31	3
MPB4[1]	4	8.88	2.75	3.50	1.88	9.38	1.71	8.13	9.88	3.06	9.19	4
MPB6	6	8.50	5.00	4.25	4.13	9.00	3.96	7.75	9.50	5.31	8.81	5
MPB9	9	8.50	6.50	4.25	5.63	9.00	5.46	7.75	9.50	6.81	8.81	6
MPB12	12	10.38	6.50	4.25	5.63	10.88	5.46	9.63	11.38	6.81	10.69	6

[1] Not hinged

Technical references and CAD downloads available at www.hammondmfg.com

All dimensions in inches unless specified otherwise

© Hammond Manufacturing

Canada: 519.822.2960 or 905.456.3770 USA: 716.630.7030

Data Subject to change without notice

Mouser Electronics

Authorized Distributor

Click to View Pricing, Inventory, Delivery & Lifecycle Information:

Hammond:

MPB3 MPB1 MPB4 MPB2 MPB6 MPB9 MPB16 MPB25 MPB30 MPB20 MPB12