MAX481/MAX483/MAX485/ MAX487–MAX491/MAX1487

Low-Power, Slew-Rate-Limited RS-485/RS-422 Transceivers

General Description

The MAX481, MAX483, MAX485, MAX487–MAX491, and MAX1487 are low-power transceivers for RS-485 and RS-422 communication. Each part contains one driver and one receiver. The MAX483, MAX487, MAX488, and MAX489 feature reduced slew-rate drivers that minimize EMI and reduce reflections caused by improperly terminated cables, thus allowing error-free data transmission up to 250kbps. The driver slew rates of the MAX481, MAX485, MAX490, MAX491, and MAX1487 are not limited, allowing them to transmit up to 2.5Mbps.

These transceivers draw between 120µA and 500µA of supply current when unloaded or fully loaded with disabled drivers. Additionally, the MAX481, MAX483, and MAX487 have a low-current shutdown mode in which they consume only 0.1µA. All parts operate from a single 5V supply.

Drivers are short-circuit current limited and are protected against excessive power dissipation by thermal shutdown circuitry that places the driver outputs into a high-impedance state. The receiver input has a fail-safe feature that guarantees a logic-high output if the input is open circuit.

The MAX487 and MAX1487 feature quarter-unit-load receiver input impedance, allowing up to 128 MAX487/MAX1487 transceivers on the bus. Full-duplex communications are obtained using the MAX488–MAX491, while the MAX481, MAX483, MAX485, MAX487, and MAX1487 are designed for half-duplex applications.

Applications

Low-Power RS-485 Transceivers

Low-Power RS-422 Transceivers

Level Translators

Transceivers for EMI-Sensitive Applications

Industrial-Control Local Area Networks

Next Generation Device Features

- **For Fault-Tolerant Applications**
  MAX3430: ±80V Fault-Protected, Fail-Safe, 1/4 Unit Load, +3.3V, RS-485 Transceiver
  MAX3440E–MAX3444E: ±15kV ESD-Protected, ±60V Fault-Protected, 10Mbps, Fail-Safe, RS-485/J1708 Transceivers
- **For Space-Constrained Applications**
  MAX3460–MAX3464: +5V, Fail-Safe, 20Mbps, Profibus RS-485/RS-422 Transceivers
  MAX3362: +3.3V, High-Speed, RS-485/RS-422 Transceiver in a SOT23 Package
  MAX3280E–MAX3284E: ±15kV ESD-Protected, 52Mbps, +3V to +5.5V, SOT23, RS-485/RS-422, True Fail-Safe Receivers
  MAX3293/MAX3294/MAX3295: 20Mbps, +3.3V, SOT23, RS-485/RS-422 Transmitters
- **For Multiple Transceiver Applications**
  MAX3030E–MAX3033E: ±15kV ESD-Protected, +3.3V, Quad RS-422 Transmitters
- **For Fail-Safe Applications**
  MAX3080–MAX3089: Fail-Safe, High-Speed (10Mbps), Slew-Rate-Limited RS-485/RS-422 Transceivers
- **For Low-Voltage Applications**
  MAX3483E/MAX3485E/MAX3486E/MAX3488E/ MAX3490E/MAX3491E: +3.3V Powered, ±15kV ESD-Protected, 12Mbps, Slew-Rate-Limited, True RS-485/RS-422 Transceivers

Ordering Information appears at end of data sheet.

Selection Table

PART NUMBER	HALF/FULL DUPLEX	DATA RATE (Mbps)	SLEW-RATE LIMITED	LOW-POWER SHUTDOWN	RECEIVER/ DRIVER ENABLE	QUIESCENT CURRENT (µA)	NUMBER OF RECEIVERS ON BUS	PIN COUNT
MAX481	Half	2.5	No	Yes	Yes	300	32	8
MAX483	Half	0.25	Yes	Yes	Yes	120	32	8
MAX485	Half	2.5	No	No	Yes	300	32	8
MAX487	Half	0.25	Yes	Yes	Yes	120	128	8
MAX488	Full	0.25	Yes	No	No	120	32	8
MAX489	Full	0.25	Yes	No	Yes	120	32	14
MAX490	Full	2.5	No	No	No	300	32	8
MAX491	Full	2.5	No	No	Yes	300	32	14
MAX1487	Half	2.5	No	No	Yes	230	128	8

For pricing, delivery, and ordering information, please contact Maxim Direct at 1-888-629-4642, or visit Maxim Integrated's website at www.maximintegrated.com.

19-0122; Rev 10; 9/14

Low-Power, Slew-Rate-Limited RS-485/RS-422 Transceivers

ABSOLUTE MAXIMUM RATINGS

Supply Voltage (V_{CC}) 12V
Control Input Voltage ($\overline{RE}$, DE) ..... -0.5V to (V_{CC} + 0.5V)
Driver Input Voltage (DI) ..... -0.5V to (V_{CC} + 0.5V)
Driver Output Voltage (A, B) ..... -8V to +12.5V
Receiver Input Voltage (A, B) ..... -8V to +12.5V
Receiver Output Voltage (RO) ..... -0.5V to (V_{CC} + 0.5V)
Continuous Power Dissipation (T_A = +70°C)
8-Pin Plastic DIP (derate 9.09mW/°C above +70°C) 727mW
14-Pin Plastic DIP (derate 10.00mW/°C above +70°C) ..800mW
8-Pin SO (derate 5.88mW/°C above +70°C) 471mW
14-Pin SO (derate 8.33mW/°C above +70°C) 667mW
8-Pin µMAX (derate 4.1mW/°C above +70°C) 830mW
8-Pin CERDIP (derate 8.00mW/°C above +70°C) 640mW
14-Pin CERDIP (derate 9.09mW/°C above +70°C) 727mW
Operating Temperature Ranges
MAX4_ _C_ _/MAX1487C_ A ..... 0°C to +70°C
MAX4_ _E_ _/MAX1487E_ A ..... -40°C to +85°C
MAX4_ _M_/MAX1487MJA ..... -55°C to +125°C
Storage Temperature Range ..... -65°C to +160°C
Lead Temperature (soldering, 10sec) ..... +300°C

Stresses beyond those listed under "Absolute Maximum Ratings" may cause permanent damage to the device. These are stress ratings only, and functional operation of the device at these or any other conditions beyond those indicated in the operational sections of the specifications is not implied. Exposure to absolute maximum rating conditions for extended periods may affect device reliability.

DC ELECTRICAL CHARACTERISTICS

(V_{CC} = 5V ±5%, T_A = T_{MIN} to T_{MAX}, unless otherwise noted.) (Notes 1, 2)

PARAMETER	SYMBOL	CONDITIONS		MIN	TYP	MAX	UNITS
Differential Driver Output (no load)	V_{OD1}					5	V
Differential Driver Output (with load)	V_{OD2}	R = 50Ω (RS-422)		2			V
		R = 27Ω (RS-485), Figure 4		1.5		5	
Change in Magnitude of Driver Differential Output Voltage for Complementary Output States	ΔV_{OD}	R = 27Ω or 50Ω, Figure 4				0.2	V
Driver Common-Mode Output Voltage	V_{OC}	R = 27Ω or 50Ω, Figure 4				3	V
Change in Magnitude of Driver Common-Mode Output Voltage for Complementary Output States	ΔV_{OD}	R = 27Ω or 50Ω, Figure 4				0.2	V
Input High Voltage	V_{IH}	DE, DI, $\overline{RE}$		2.0			V
Input Low Voltage	V_{IL}	DE, DI, $\overline{RE}$				0.8	V
Input Current	I_{IN1}	DE, DI, $\overline{RE}$				±2	µA
Input Current (A, B)	I_{IN2}	DE = 0V; V_{CC} = 0V or 5.25V, all devices except MAX487/MAX1487	V_{IN} = 12V			1.0	mA
			V_{IN} = -7V			-0.8	
		MAX487/MAX1487, DE = 0V, V_{CC} = 0V or 5.25V	V_{IN} = 12V			0.25	mA
			V_{IN} = -7V			-0.2	
Receiver Differential Threshold Voltage	V_{TH}	-7V ≤ V_{CM} ≤ 12V		-0.2		0.2	V
Receiver Input Hysteresis	ΔV_{TH}	V_{CM} = 0V			70		mV
Receiver Output High Voltage	V_{OH}	I_O = -4mA, V_{ID} = 200mV		3.5			V
Receiver Output Low Voltage	V_{OL}	I_O = 4mA, V_{ID} = -200mV				0.4	V
Three-State (high impedance) Output Current at Receiver	I_{OZR}	0.4V ≤ V_O ≤ 2.4V				±1	µA
Receiver Input Resistance	R_{IN}	-7V ≤ V_{CM} ≤ 12V, all devices except MAX487/MAX1487		12			kΩ
		-7V ≤ V_{CM} ≤ 12V, MAX487/MAX1487		48			kΩ

DC ELECTRICAL CHARACTERISTICS (continued)

(V_{CC} = 5V ±5%, T_A = T_{MIN} to T_{MAX}, unless otherwise noted.) (Notes 1, 2)

PARAMETER	SYMBOL	CONDITIONS			MIN	TYP	MAX	UNITS
No-Load Supply Current (Note 3)	I_{CC}	MAX488/MAX489, DE, DI, $\overline{RE}$ = 0V or V_{CC}				120	250	µA
		MAX490/MAX491, DE, DI, $\overline{RE}$ = 0V or V_{CC}				300	500	
		MAX481/MAX485, $\overline{RE}$ = 0V or V_{CC}	DE = V_{CC}			500	900	
			DE = 0V			300	500	
		MAX1487, $\overline{RE}$ = 0V or V_{CC}	DE = V_{CC}			300	500	
			DE = 0V			230	400	
		MAX483/MAX487, $\overline{RE}$ = 0V or V_{CC}	DE = 5V	MAX483		350	650	
				MAX487		250	400	
			DE = 0V			120	250	
Supply Current in Shutdown	I_{SHDN}	MAX481/483/487, DE = 0V, $\overline{RE}$ = V_{CC}				0.1	10	µA
Driver Short-Circuit Current, V_O = High	I_{OSD1}	-7V ≤ V_O ≤12V (Note 4)			35		250	mA
Driver Short-Circuit Current, V_O = Low	I_{OSD2}	-7V ≤ V_O ≤12V (Note 4)			35		250	mA
Receiver Short-Circuit Current	I_{OSR}	0V ≤ V_O ≤ V_{CC}			7		95	mA

SWITCHING CHARACTERISTICS—MAX481/MAX485, MAX490/MAX491, MAX1487

(V_{CC} = 5V ±5%, T_A = T_{MIN} to T_{MAX}, unless otherwise noted.) (Notes 1, 2)

PARAMETER	SYMBOL	CONDITIONS		MIN	TYP	MAX	UNITS
Driver Input to Output	t_{PLH}	Figures 6 and 8, R_{DIFF} = 54Ω, C_{L1} = C_{L2} = 100pF		10	30	60	ns
	t_{PHL}			10	30	60	
Driver Output Skew to Output	t_{SKEW}	Figures 6 and 8, R_{DIFF} = 54Ω, C_{L1} = C_{L2} = 100pF			5	10	ns
Driver Rise or Fall Time	t_R, t_F	Figures 6 and 8, R_{DIFF} = 54Ω, C_{L1} = C_{L2} = 100pF	MAX481, MAX485, MAX1487	3	15	40	ns
			MAX490C/E, MAX491C/E	5	15	25	
			MAX490M, MAX491M	3	15	40	
Driver Enable to Output High	t_{ZH}	Figures 7 and 9, C_L = 100pF, S2 closed			40	70	ns
Driver Enable to Output Low	t_{ZL}	Figures 7 and 9, C_L = 100pF, S1 closed			40	70	ns
Driver Disable Time from Low	t_{LZ}	Figures 7 and 9, C_L = 15pF, S1 closed			40	70	ns
Driver Disable Time from High	t_{HZ}	Figures 7 and 9, C_L = 15pF, S2 closed			40	70	ns
Receiver Input to Output	t_{PLH}, t_{PHL}	Figures 6 and 10, R_{DIFF} = 54Ω, C_{L1} = C_{L2} = 100pF	MAX481, MAX485, MAX1487	20	90	200	ns
			MAX490C/E, MAX491C/E	20	90	150	
			MAX490M, MAX491M	20	90	200	
| t_{PLH} - t_{PHL} | Differential Receiver Skew	t_{SKD}	Figures 6 and 10, R_{DIFF} = 54Ω, C_{L1} = C_{L2} = 100pF			13		ns
Receiver Enable to Output Low	t_{ZL}	Figures 5 and 11, C_{RL} = 15pF, S1 closed			20	50	ns
Receiver Enable to Output High	t_{ZH}	Figures 5 and 11, C_{RL} = 15pF, S2 closed			20	50	ns
Receiver Disable Time from Low	t_{LZ}	Figures 5 and 11, C_{RL} = 15pF, S1 closed			20	50	ns
Receiver Disable Time from High	t_{HZ}	Figures 5 and 11, C_{RL} = 15pF, S2 closed			20	50	ns
Maximum Data Rate	f_{MAX}			2.5			Mbps
Time to Shutdown	t_{SHDN}	MAX481 (Note 5)		50	200	600	ns

SWITCHING CHARACTERISTICS—MAX481/MAX485, MAX490/MAX491, MAX1487 (continued)

(V_{CC} = 5V ±5%, T_A = T_{MIN} to T_{MAX}, unless otherwise noted.) (Notes 1, 2)

PARAMETER	SYMBOL	CONDITIONS	MIN	TYP	MAX	UNITS
Driver Enable from Shutdown to Output High (MAX481)	$t_{ZH(SHDN)}$	Figures 7 and 9, C_L = 100pF, S2 closed		40	100	ns
Driver Enable from Shutdown to Output Low (MAX481)	$t_{ZL(SHDN)}$	Figures 7 and 9, C_L = 100pF, S1 closed		40	100	ns
Receiver Enable from Shutdown to Output High (MAX481)	$t_{ZH(SHDN)}$	Figures 5 and 11, C_L = 15pF, S2 closed, A - B = 2V		300	1000	ns
Receiver Enable from Shutdown to Output Low (MAX481)	$t_{ZL(SHDN)}$	Figures 5 and 11, C_L = 15pF, S1 closed, B - A = 2V		300	1000	ns

SWITCHING CHARACTERISTICS—MAX483, MAX487/MAX488/MAX489

(V_{CC} = 5V ±5%, T_A = T_{MIN} to T_{MAX}, unless otherwise noted.) (Notes 1, 2)

PARAMETER	SYMBOL	CONDITIONS	MIN	TYP	MAX	UNITS
Driver Input to Output	t_{PLH}	Figures 6 and 8, R_{DIFF} = 54Ω, C_{L1} = C_{L2} = 100pF	250	800	2000	ns
	t_{PHL}		250	800	2000	
Driver Output Skew to Output	t_{SKEW}	Figures 6 and 8, R_{DIFF} = 54Ω, C_{L1} = C_{L2} = 100pF		100	800	ns
Driver Rise or Fall Time	t_R, t_F	Figures 6 and 8, R_{DIFF} = 54Ω, C_{L1} = C_{L2} = 100pF	250		2000	ns
Driver Enable to Output High	t_{ZH}	Figures 7 and 9, C_L = 100pF, S2 closed	250		2000	ns
Driver Enable to Output Low	t_{ZL}	Figures 7 and 9, C_L = 100pF, S1 closed	250		2000	ns
Driver Disable Time from Low	t_{LZ}	Figures 7 and 9, C_L = 15pF, S1 closed	300		3000	ns
Driver Disable Time from High	t_{HZ}	Figures 7 and 9, C_L = 15pF, S2 closed	300		3000	ns
Receiver Input to Output	t_{PLH}	Figures 6 and 10, R_{DIFF} = 54Ω, C_{L1} = C_{L2} = 100pF	250		2000	ns
	t_{PHL}		250		2000	
$\lvert t_{PLH} - t_{PHL} \rvert$ Differential Receiver Skew	t_{SKD}	Figures 6 and 10, R_{DIFF} = 54Ω, C_{L1} = C_{L2} = 100pF		100		ns
Receiver Enable to Output Low	t_{ZL}	Figures 5 and 11, C_{RL} = 15pF, S1 closed		20	50	ns
Receiver Enable to Output High	t_{ZH}	Figures 5 and 11, C_{RL} = 15pF, S2 closed		20	50	ns
Receiver Disable Time from Low	t_{LZ}	Figures 5 and 11, C_{RL} = 15pF, S1 closed		20	50	ns
Receiver Disable Time from High	t_{HZ}	Figures 5 and 11, C_{RL} = 15pF, S2 closed		20	50	ns
Maximum Data Rate	f_{MAX}	t_{PLH}, t_{PHL} < 50% of data period	250			kbps
Time to Shutdown	t_{SHDN}	MAX483/MAX487 (Note 5)	50	200	600	ns
Driver Enable from Shutdown to Output High	$t_{ZH(SHDN)}$	MAX483/MAX487, Figures 7 and 9, C_L = 100pF, S2 closed			2000	ns
Driver Enable from Shutdown to Output Low	$t_{ZL(SHDN)}$	MAX483/MAX487, Figures 7 and 9, C_L = 100pF, S1 closed			2000	ns
Receiver Enable from Shutdown to Output High	$t_{ZH(SHDN)}$	MAX483/MAX487, Figures 5 and 11, C_L = 15pF, S2 closed			2500	ns
Receiver Enable from Shutdown to Output Low	$t_{ZL(SHDN)}$	MAX483/MAX487, Figures 5 and 11, C_L = 15pF, S1 closed			2500	ns

NOTES FOR ELECTRICAL/SWITCHING CHARACTERISTICS

Note 1: All currents into device pins are positive; all currents out of device pins are negative. All voltages are referenced to device ground unless otherwise specified.

Note 2: All typical specifications are given for V_{CC} = 5V and T_A = +25°C.

Note 3: Supply current specification is valid for loaded transmitters when DE = 0V.

Note 4: Applies to peak current. See *Typical Operating Characteristics.*

Note 5: The MAX481/MAX483/MAX487 are put into shutdown by bringing $\overline{RE}$ high and DE low. If the inputs are in this state for less than 50ns, the parts are guaranteed not to enter shutdown. If the inputs are in this state for at least 600ns, the parts are guaranteed to have entered shutdown. See *Low-Power Shutdown Mode (MAX481/MAX483/MAX487)* section.

Typical Operating Characteristics

(V_{CC} = 5V, T_A = +25°C, unless otherwise noted.)

OUTPUT CURRENT vs. RECEIVER OUTPUT LOW VOLTAGE

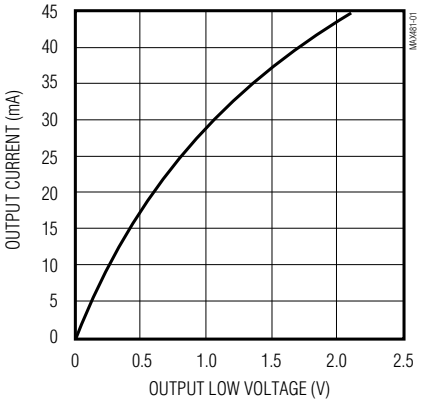

OUTPUT CURRENT vs. RECEIVER OUTPUT HIGH VOLTAGE

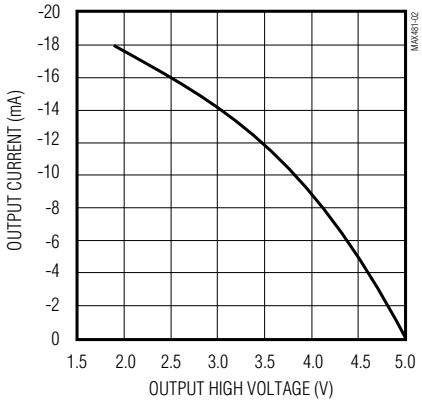

RECEIVER OUTPUT HIGH VOLTAGE vs. TEMPERATURE

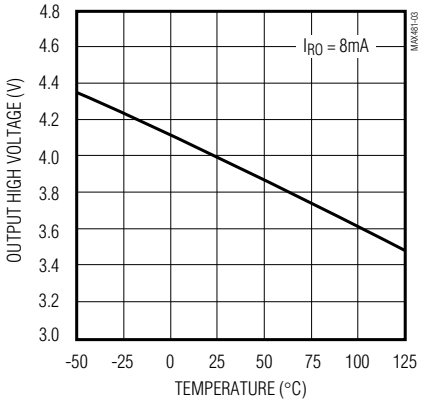

RECEIVER OUTPUT LOW VOLTAGE vs. TEMPERATURE

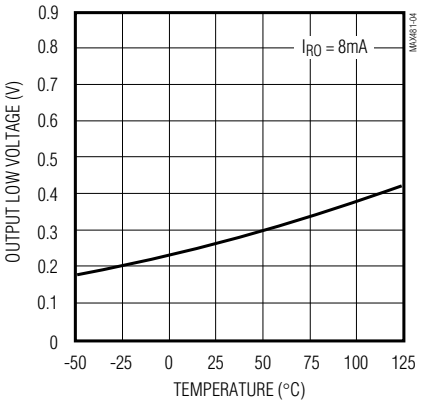

DRIVER OUTPUT CURRENT vs. DIFFERENTIAL OUTPUT VOLTAGE

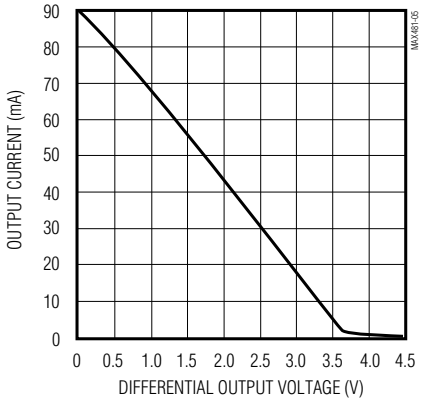

DRIVER DIFFERENTIAL OUTPUT VOLTAGE vs. TEMPERATURE

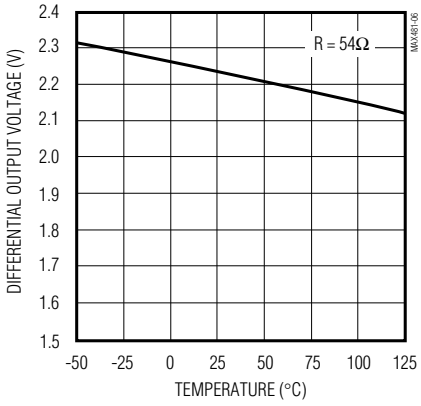

MAX481/MAX483/MAX485/ MAX487–MAX491/MAX1487

Low-Power, Slew-Rate-Limited RS-485/RS-422 Transceivers

Typical Operating Characteristics (continued)

(V_{CC} = 5V, T_A = +25°C, unless otherwise noted.)

OUTPUT CURRENT vs. DRIVER OUTPUT LOW VOLTAGE

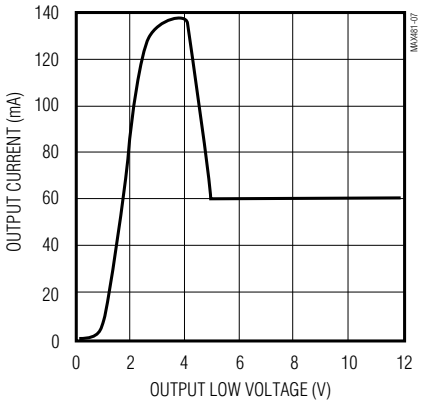

OUTPUT CURRENT vs. DRIVER OUTPUT HIGH VOLTAGE

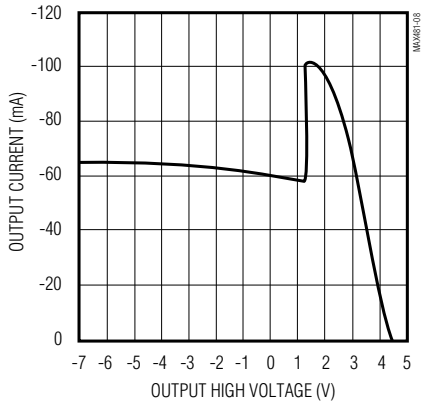

MAX481/MAX485/MAX490/MAX491 SUPPLY CURRENT vs. TEMPERATURE

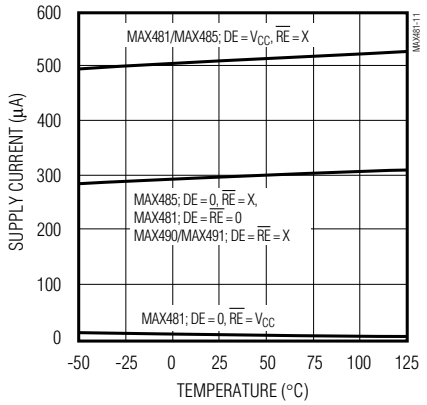

MAX483/MAX487–MAX489 SUPPLY CURRENT vs. TEMPERATURE

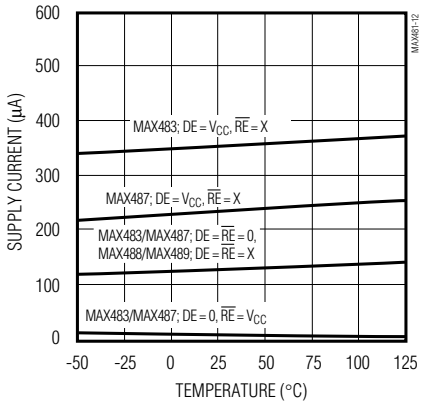

MAX1487 SUPPLY CURRENT vs. TEMPERATURE

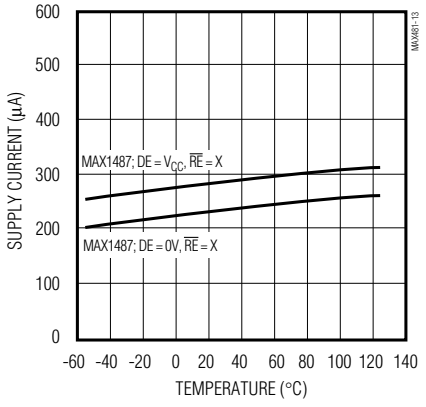

Pin Description

PIN					NAME	FUNCTION
MAX481/MAX483/ MAX485/MAX487/ MAX1487		MAX488/ MAX490		MAX489/ MAX491		
DIP/SO	µMAX	DIP/SO	µMAX	DIP/SO		
1	3	2	4	2	RO	Receiver Output: If A > B by 200mV, RO will be high; If A < B by 200mV, RO will be low.
2	4	—	—	3	$\overline{RE}$	Receiver Output Enable. RO is enabled when $\overline{RE}$ is low; RO is high impedance when $\overline{RE}$ is high.
3	5	—	—	4	DE	Driver Output Enable. The driver outputs, Y and Z, are enabled by bringing DE high. They are high impedance when DE is low. If the driver outputs are enabled, the parts function as line drivers. While they are high impedance, they function as line receivers if $\overline{RE}$ is low.
4	6	3	5	5	DI	Driver Input. A low on DI forces output Y low and output Z high. Similarly, a high on DI forces output Y high and output Z low.
5	7	4	6	6, 7	GND	Ground
—	—	5	7	9	Y	Noninverting Driver Output
—	—	6	8	10	Z	Inverting Driver Output
6	8	—	—	—	A	Noninverting Receiver Input and Noninverting Driver Output
—	—	8	2	12	A	Noninverting Receiver Input
7	1	—	—	—	B	Inverting Receiver Input and Inverting Driver Output
—	—	7	1	11	B	Inverting Receiver Input
8	2	1	3	14	V_{CC}	Positive Supply: 4.75V ≤ V_{CC} ≤ 5.25V
—	—	—	—	1, 8, 13	N.C.	No Connect—not internally connected

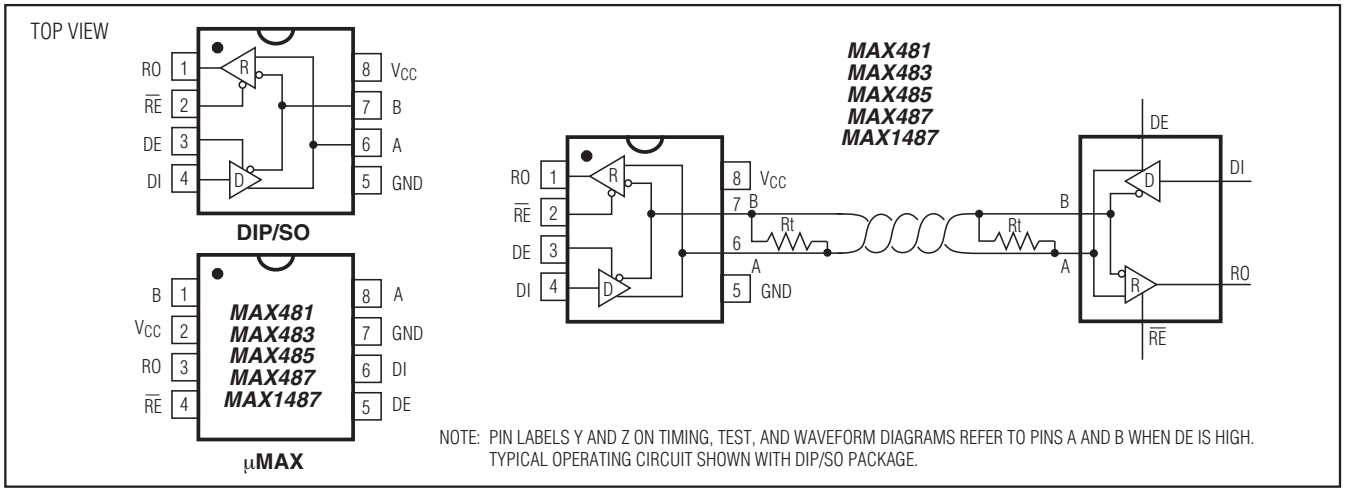

Figure 1. MAX481/MAX483/MAX485/MAX487/MAX1487 Pin Configuration and Typical Operating Circuit

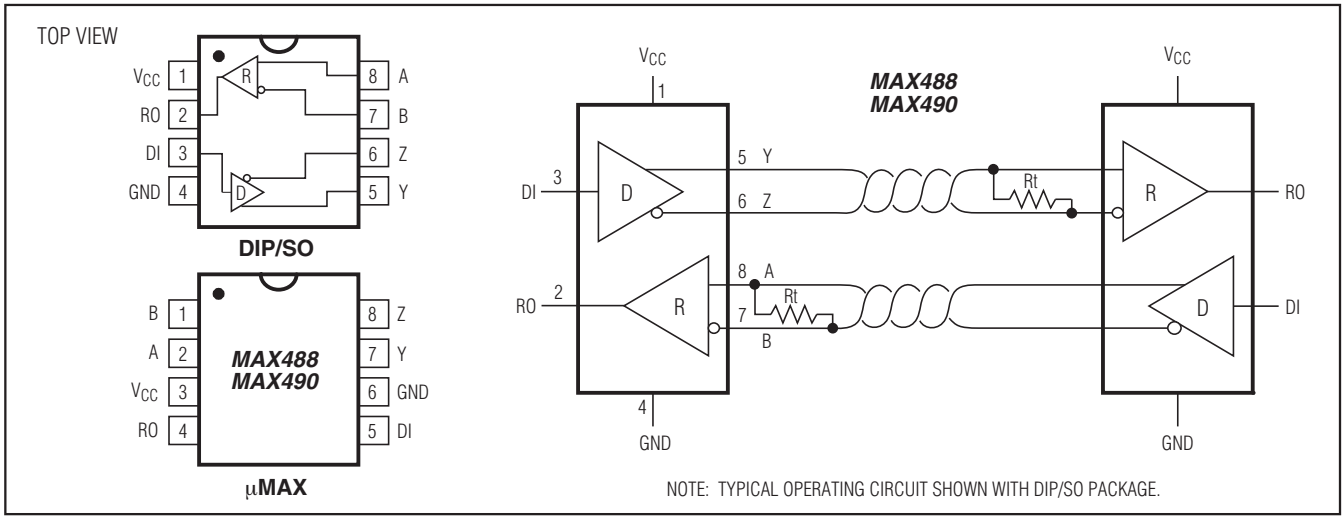

Figure 2. MAX488/MAX490 Pin Configuration and Typical Operating Circuit

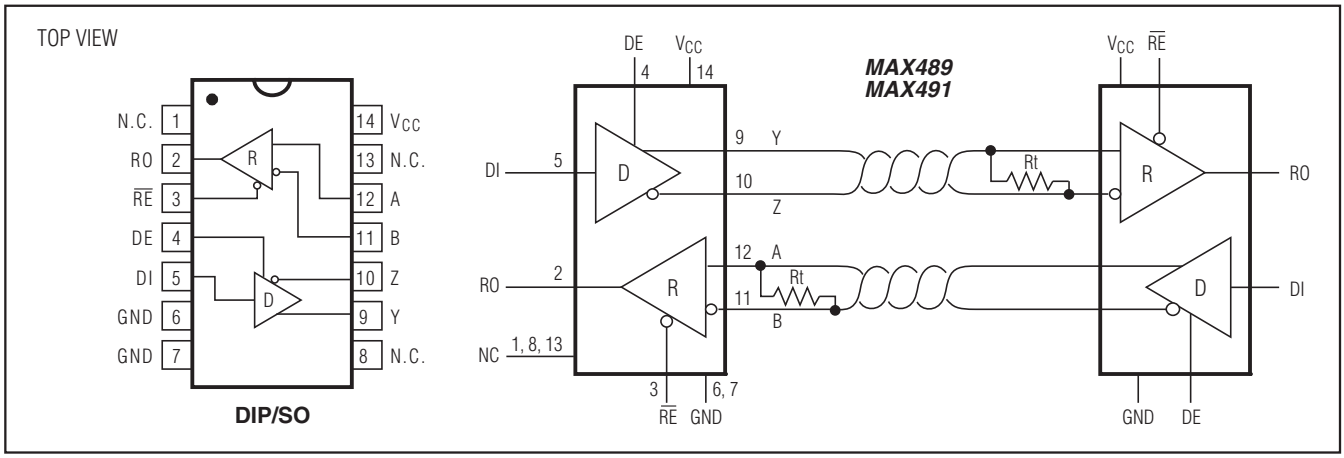

Figure 3. MAX489/MAX491 Pin Configuration and Typical Operating Circuit

Applications Information

The MAX481/MAX483/MAX485/MAX487–MAX491 and MAX1487 are low-power transceivers for RS-485 and RS-422 communications. The MAX481, MAX485, MAX490, MAX491, and MAX1487 can transmit and receive at data rates up to 2.5Mbps, while the MAX483, MAX487, MAX488, and MAX489 are specified for data rates up to 250kbps. The MAX488–MAX491 are full-duplex transceivers while the MAX481, MAX483, MAX485, MAX487, and MAX1487 are half-duplex. In addition, Driver Enable (DE) and Receiver Enable ($\overline{RE}$) pins are included on the MAX481, MAX483, MAX485, MAX487, MAX489, MAX491, and MAX1487. When disabled, the driver and receiver outputs are high impedance.

MAX487/MAX1487: 128 Transceivers on the Bus

The 48kΩ, 1/4-unit-load receiver input impedance of the MAX487 and MAX1487 allows up to 128 transceivers on a bus, compared to the 1-unit load (12kΩ input impedance) of standard RS-485 drivers (32 transceivers maximum). Any combination of MAX487/MAX1487 and other RS-485 transceivers with a total of 32 unit loads or less can be put on the bus. The MAX481/MAX483/MAX485 and MAX488–MAX491 have standard 12kΩ Receiver Input impedance.

Test Circuits

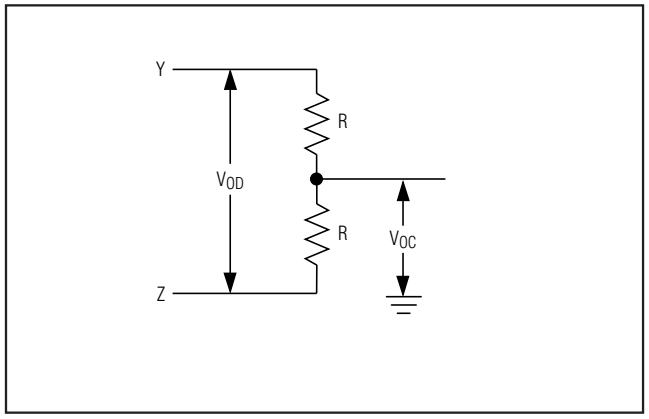

Figure 4. Driver DC Test Load

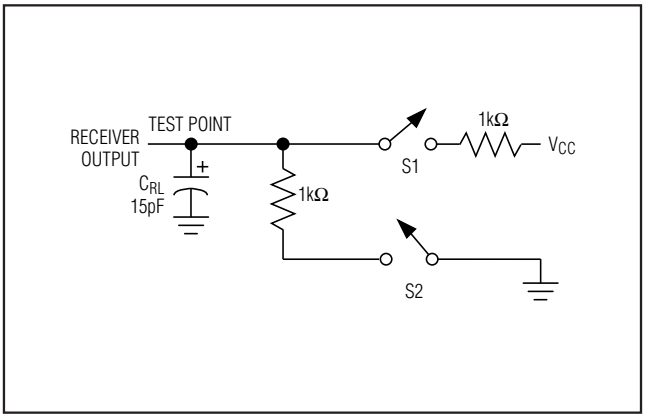

Figure 5. Receiver Timing Test Load

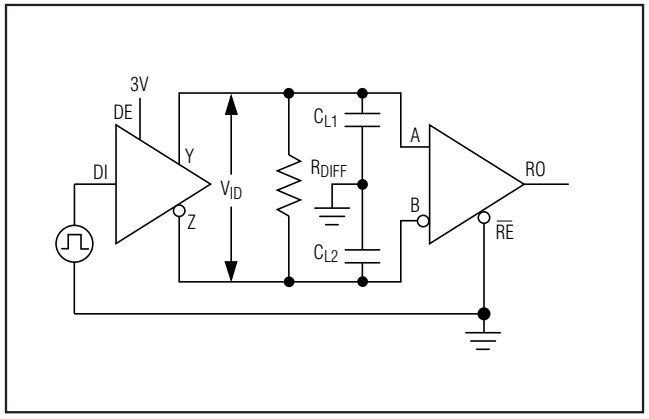

Figure 6. Driver/Receiver Timing Test Circuit

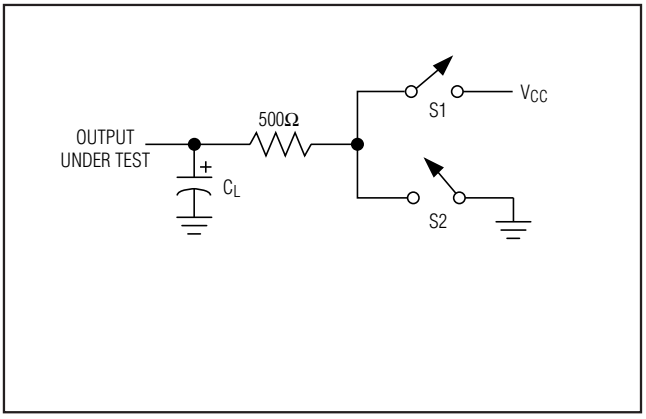

Figure 7. Driver Timing Test Load

MAX483/MAX487/MAX488/MAX489: Reduced EMI and Reflections

The MAX483 and MAX487–MAX489 are slew-rate limited, minimizing EMI and reducing reflections caused by improperly terminated cables. Figure 12 shows the driver output waveform and its Fourier analysis of a 150kHz signal transmitted by a MAX481, MAX485, MAX490, MAX491, or MAX1487. High-frequency harmonics with large amplitudes are evident. Figure 13 shows the same information displayed for a MAX483, MAX487, MAX488, or MAX489 transmitting under the same conditions. Figure 13's high-frequency harmonics have much lower amplitudes, and the potential for EMI is significantly reduced.

Switching Waveforms

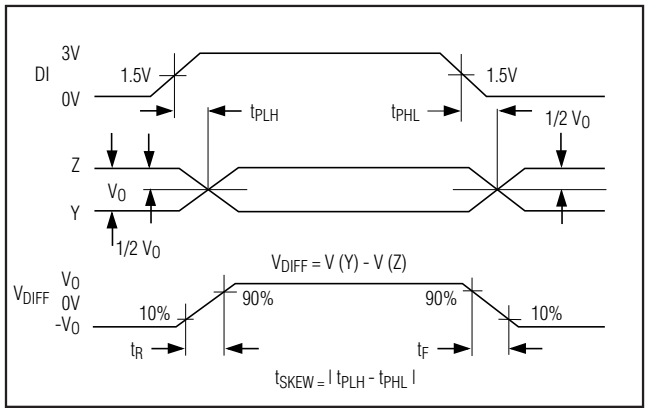

Figure 8. Driver Propagation Delays

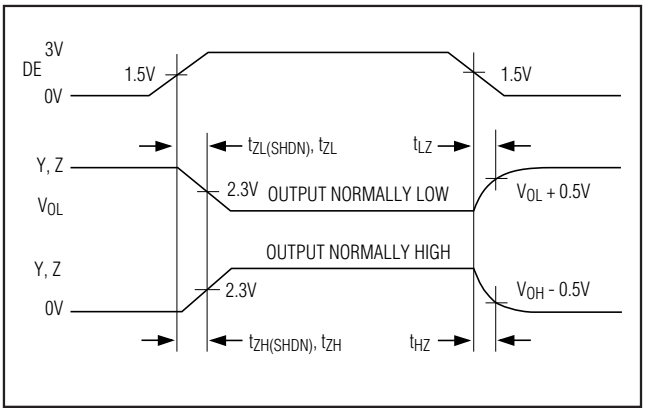

Figure 9. Driver Enable and Disable Times (except MAX488 and MAX490)

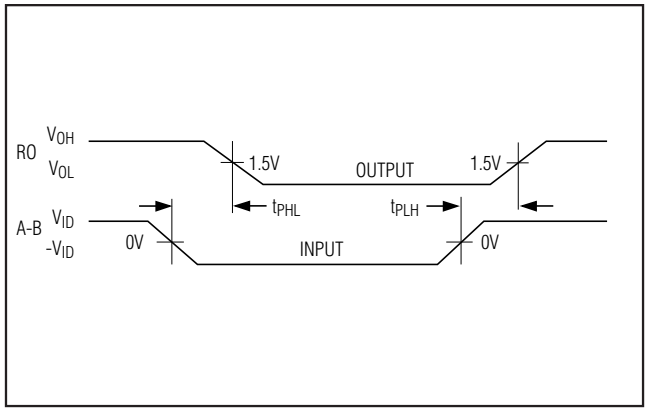

Figure 10. Receiver Propagation Delays

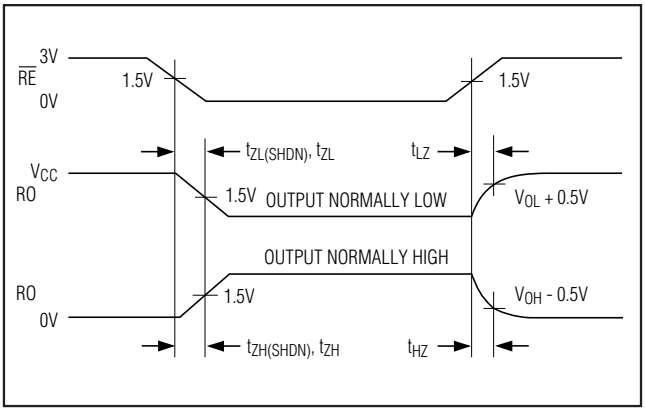

Figure 11. Receiver Enable and Disable Times (except MAX488 and MAX490)

Function Tables (MAX481/MAX483/MAX485/MAX487/MAX1487)

Table 1. Transmitting

INPUTS			OUTPUTS	
$\overline{RE}$	DE	DI	Z	Y
X	1	1	0	1
X	1	0	1	0
0	0	X	High-Z	High-Z
1	0	X	High-Z*	High-Z*

X = Don't care
High-Z = High impedance
**Shutdown mode for MAX481/MAX483/MAX487*

Table 2. Receiving

INPUTS			OUTPUT
$\overline{RE}$	DE	A-B	RO
0	0	≥ +0.2V	1
0	0	≤ -0.2V	0
0	0	Inputs open	1
1	0	X	High-Z*

X = Don't care
High-Z = High impedance
**Shutdown mode for MAX481/MAX483/MAX487*

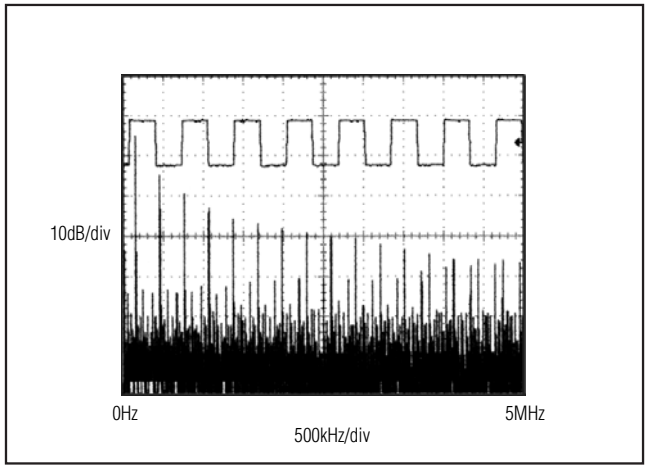

Figure 12. Driver Output Waveform and FFT Plot of MAX481/ MAX485/MAX490/MAX491/MAX1487 Transmitting a 150kHz Signal

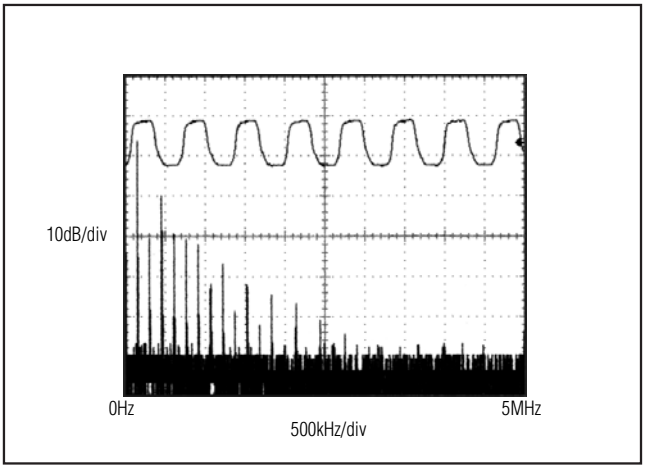

Figure 13. Driver Output Waveform and FFT Plot of MAX483/ MAX487–MAX489 Transmitting a 150kHz Signal

Low-Power Shutdown Mode (MAX481/MAX483/MAX487)

A low-power shutdown mode is initiated by bringing both $\overline{RE}$ high and DE low. The devices will not shut down unless both the driver and receiver are disabled. In shutdown, the devices typically draw only 0.1µA of supply current.

$\overline{RE}$ and DE may be driven simultaneously; the parts are guaranteed not to enter shutdown if $\overline{RE}$ is high and DE is low for less than 50ns. If the inputs are in this state for at least 600ns, the parts are guaranteed to enter shutdown.

For the MAX481, MAX483, and MAX487, the t_{ZH} and t_{ZL} enable times assume the part was not in the low-power shutdown state (the MAX485/MAX488–MAX491 and MAX1487 can not be shut down). The $t_{ZH(SHDN)}$ and $t_{ZL(SHDN)}$ enable times assume the parts were shut down (see *Electrical Characteristics*).

It takes the drivers and receivers longer to become enabled from the low-power shutdown state ($t_{ZH(SHDN)}$, $t_{ZL(SHDN)}$) than from the operating mode (t_{ZH}, t_{ZL}). (The parts are in operating mode if the $\overline{RE}$, DE inputs equal a logical 0,1 or 1,1 or 0, 0.)

Driver Output Protection

Excessive output current and power dissipation caused by faults or by bus contention are prevented by two mechanisms. A foldback current limit on the output stage provides immediate protection against short circuits over the whole common-mode voltage range (see *Typical Operating Characteristics*). In addition, a thermal shutdown circuit forces the driver outputs into a high-impedance state if the die temperature rises excessively.

Propagation Delay

Many digital encoding schemes depend on the difference between the driver and receiver propagation delay times. Typical propagation delays are shown in Figures 15–18 using Figure 14's test circuit.

The difference in receiver delay times, $|t_{PLH} - t_{PHL}|$, is typically under 13ns for the MAX481, MAX485, MAX490, MAX491, and MAX1487 and is typically less than 100ns for the MAX483 and MAX487–MAX489.

The driver skew times are typically 5ns (10ns max) for the MAX481, MAX485, MAX490, MAX491, and MAX1487, and are typically 100ns (800ns max) for the MAX483 and MAX487–MAX489.

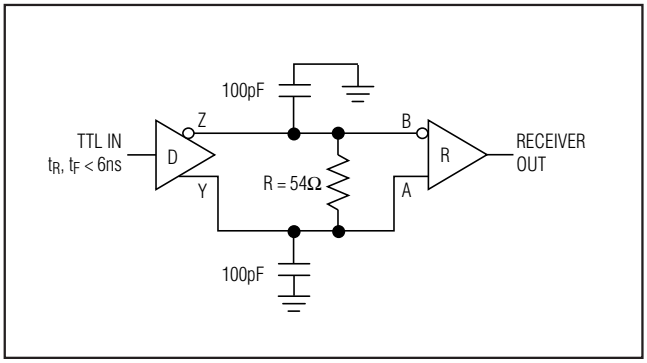

Figure 14. Receiver Propagation Delay Test Circuit

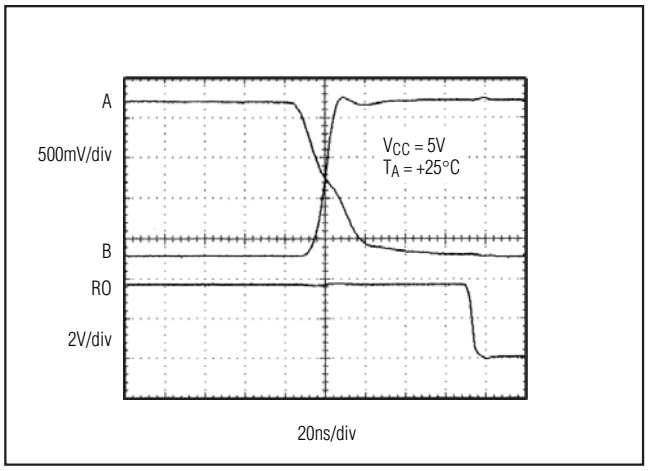

Figure 15. MAX481/MAX485/MAX490/MAX491/MAX1487 Receiver t_{PHL}

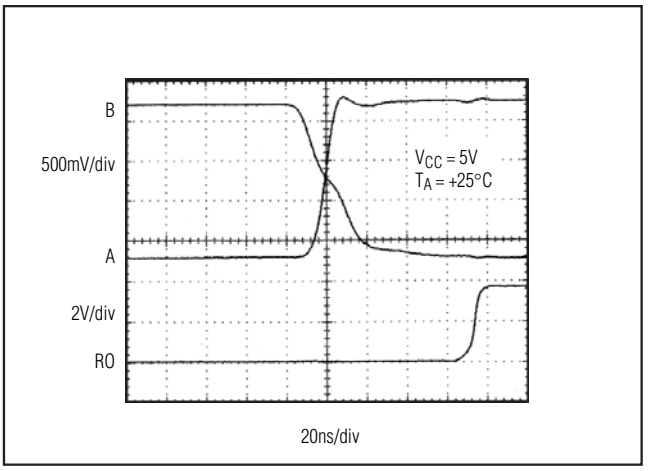

Figure 16. MAX481/MAX485/MAX490/MAX491/MAX1487 Receiver t_{PLH}

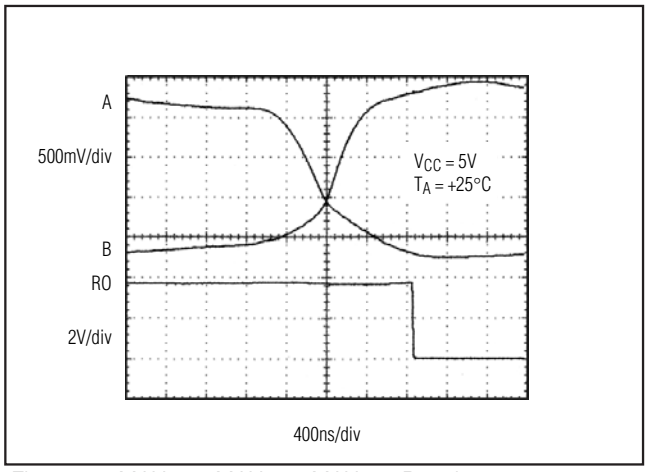

Figure 17. MAX483, MAX487–MAX489 Receiver t_{PHL}

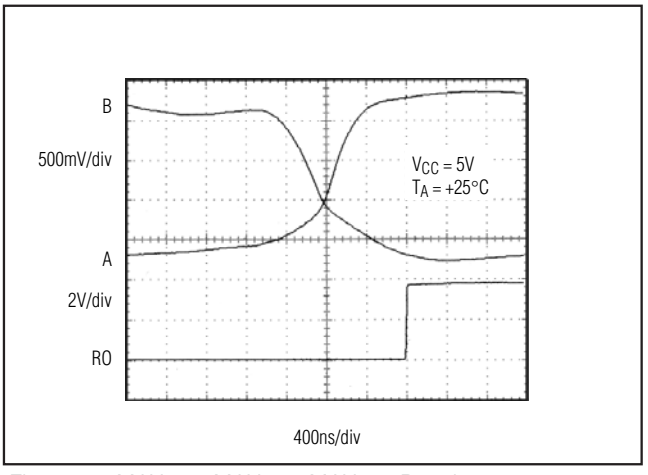

Figure 18. MAX483, MAX487–MAX489 Receiver t_{PLH}

Low-Power, Slew-Rate-Limited RS-485/RS-422 Transceivers

Line Length vs. Data Rate

The RS-485/RS-422 standard covers line lengths up to 4000 feet. For line lengths greater than 4000 feet, see Figure 23.

Figures 19 and 20 show the system differential voltage for the parts driving 4000 feet of 26AWG twisted-pair wire at 110kHz into 120Ω loads.

Typical Applications

The MAX481, MAX483, MAX485, MAX487–MAX491, and MAX1487 transceivers are designed for bidirectional data communications on multipoint bus transmission lines. Figures 21 and 22 show typical network applications circuits. These parts can also be used as line repeaters, with cable lengths longer than 4000 feet, as shown in Figure 23.

To minimize reflections, the line should be terminated at both ends in its characteristic impedance, and stub lengths off the main line should be kept as short as possible. The slew-rate-limited MAX483 and MAX487–MAX489 are more tolerant of imperfect termination.

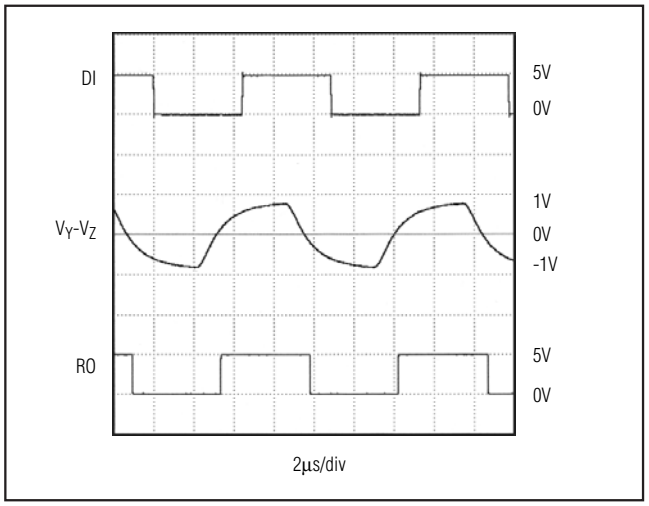

Figure 19. MAX481/MAX485/MAX490/MAX491/MAX1487 System Differential Voltage at 110kHz Driving 4000ft of Cable

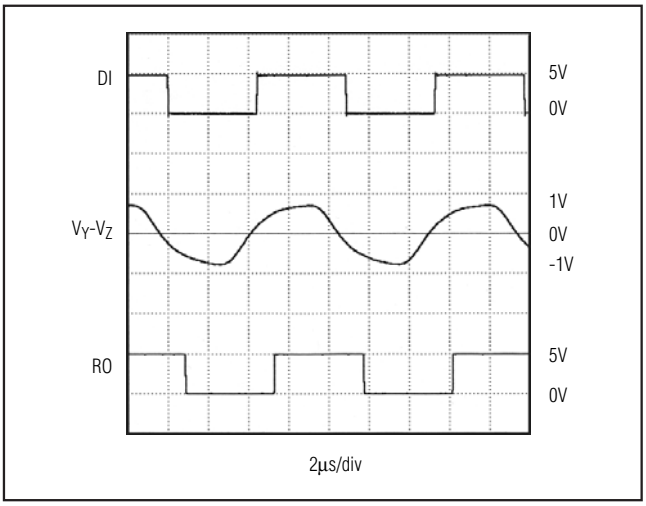

Figure 20. MAX483, MAX487–MAX489 System Differential Voltage at 110kHz Driving 4000ft of Cable

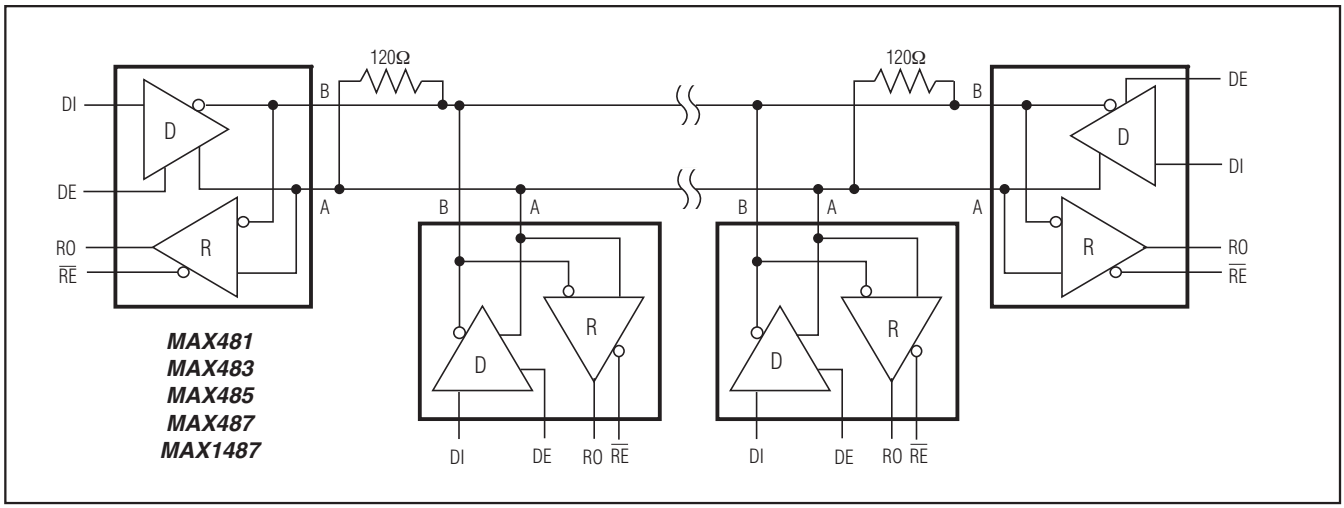

Figure 21. MAX481/MAX483/MAX485/MAX487/MAX1487 Typical Half-Duplex RS-485 Network

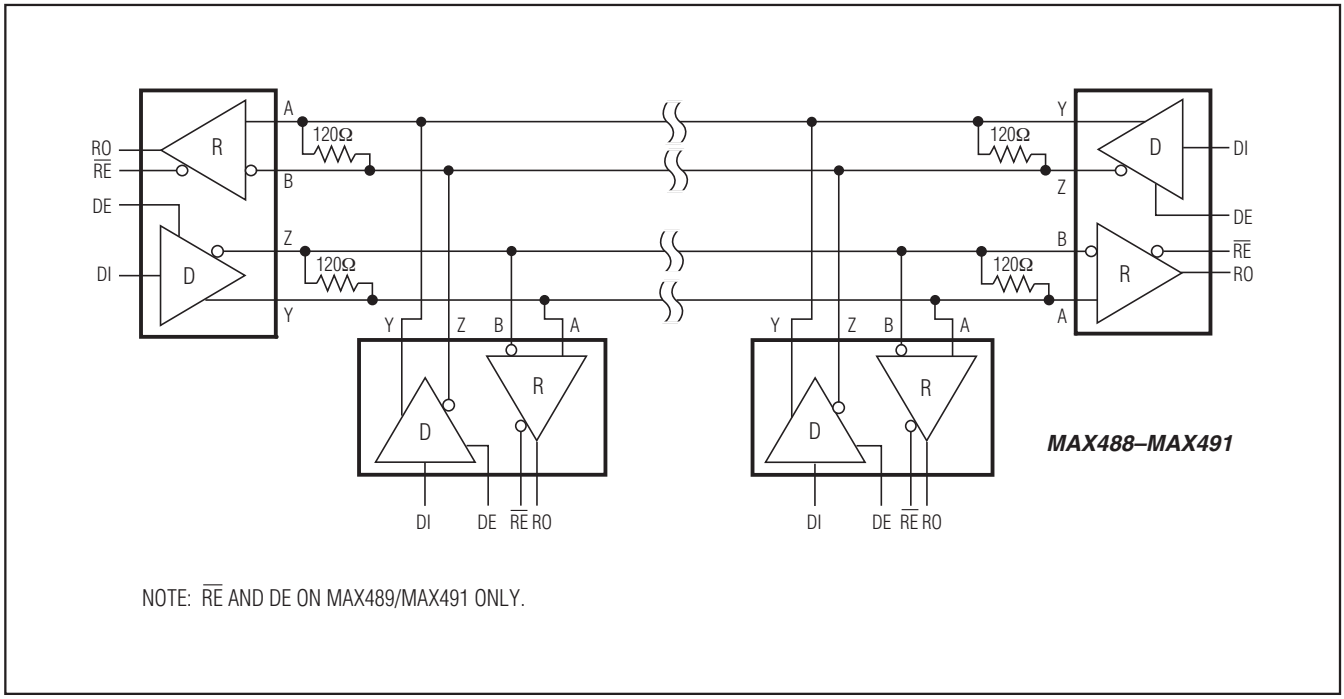

Figure 22. MAX488–MAX491 Full-Duplex RS-485 Network

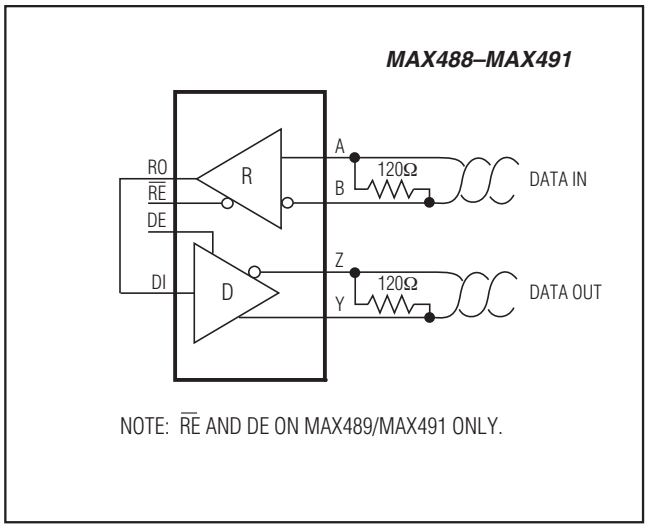

Figure 23. Line Repeater for MAX488–MAX491

Isolated RS-485

For isolated RS-485 applications, see the MAX253 and MAX1480 data sheets.

Low-Power, Slew-Rate-Limited RS-485/RS-422 Transceivers

Ordering Information

PART	TEMP RANGE	PIN-PACKAGE
MAX481CPA	0°C to +70°C	8 Plastic DIP
MAX481CSA	0°C to +70°C	8 SO
MAX481CUA	0°C to +70°C	8 µMAX
MAX481C/D	0°C to +70°C	Dice*
MAX481EPA	-40°C to +85°C	8 Plastic DIP
MAX481ESA	-40°C to +85°C	8 SO
MAX481MJA	-55°C to +125°C	8 CERDIP
MAX483CPA	0°C to +70°C	8 Plastic DIP
MAX483CSA	0°C to +70°C	8 SO
MAX483CUA	0°C to +70°C	8 µMAX
MAX483C/D	0°C to +70°C	Dice*
MAX483EPA	-40°C to +85°C	8 Plastic DIP
MAX483ESA	-40°C to +85°C	8 SO
MAX483MJA	-55°C to +125°C	8 CERDIP
MAX485CPA	0°C to +70°C	8 Plastic DIP
MAX485CSA	0°C to +70°C	8 SO
MAX485CUA	0°C to +70°C	8 µMAX
MAX485C/D	0°C to +70°C	Dice*
MAX485EPA	-40°C to +85°C	8 Plastic DIP
MAX485ESA	-40°C to +85°C	8 SO
MAX485MJA	-55°C to +125°C	8 CERDIP
MAX487CPA	0°C to +70°C	8 Plastic DIP
MAX487CSA	0°C to +70°C	8 SO
MAX487CUA	0°C to +70°C	8 µMAX
MAX487C/D	0°C to +70°C	Dice*
MAX487EPA	-40°C to +85°C	8 Plastic DIP
MAX487ESA	-40°C to +85°C	8 SO
MAX487MJA	-55°C to +125°C	8 CERDIP
MAX488CPA	0°C to +70°C	8 Plastic DIP
MAX488CSA	0°C to +70°C	8 SO
MAX488CUA	0°C to +70°C	8 µMAX
MAX488C/D	0°C to +70°C	Dice*
MAX488EPA	-40°C to +85°C	8 Plastic DIP
MAX488ESA	-40°C to +85°C	8 SO
MAX488MJA	-55°C to +125°C	8 CERDIP
MAX489CPD	0°C to +70°C	14 Plastic DIP
MAX489CSD	0°C to +70°C	14 SO
MAX489C/D	0°C to +70°C	Dice*
MAX489EPD	-40°C to +85°C	14 Plastic DIP
MAX489ESD	-40°C to +85°C	14 SO
MAX489MJD	-55°C to +125°C	14 CERDIP

Ordering Information (continued)

PART	TEMP RANGE	PIN-PACKAGE
MAX490CPA	0°C to +70°C	8 Plastic DIP
MAX490CSA	0°C to +70°C	8 SO
MAX490CUA	0°C to +70°C	8 µMAX
MAX490C/D	0°C to +70°C	Dice*
MAX490EPA	-40°C to +85°C	8 Plastic DIP
MAX490ESA	-40°C to +85°C	8 SO
MAX490MJA	-55°C to +125°C	8 CERDIP
MAX491CPD	0°C to +70°C	14 Plastic DIP
MAX491CSD	0°C to +70°C	14 SO
MAX491C/D	0°C to +70°C	Dice*
MAX491EPD	-40°C to +85°C	14 Plastic DIP
MAX491ESD	-40°C to +85°C	14 SO
MAX491MJD	-55°C to +125°C	14 CERDIP
MAX491MSD/PR	-55°C to +125°C	14 CERDIP
MAX491MSD/PR-T	-55°C to +125°C	14 CERDIP
MAX1487CPA	0°C to +70°C	8 Plastic DIP
MAX1487CSA	0°C to +70°C	8 SO
MAX1487CUA	0°C to +70°C	8 µMAX
MAX1487C/D	0°C to +70°C	Dice*
MAX1487EPA	-40°C to +85°C	8 Plastic DIP
MAX1487ESA	-40°C to +85°C	8 SO
MAX1487MJA	-55°C to +125°C	8 CERDIP

**Contact factory for dice specifications.*

Package Information

For the latest package outline information and land patterns, go to **www.maximintegrated.com/packages**. Note that a "+", "#", or "-" in the package code indicates RoHS status only. Package drawings may show a different suffix character, but the drawing pertains to the package regardless of RoHS status.

PACKAGE TYPE	PACKAGE CODE	OUTLINE NO.	LAND PATTERN NO.
8 PDIP	P8-1	21-0043	—
8 SO	S8-2	21-0041	90-0096
8 µMAX	U8-1	21-0036	90-0092
8 CERDIP	J8-2	21-0045	—
14 PDIP	P14-3	21-0043	—
14 SO	S14-1	21-0041	90-0112
14 CERDIP	J14-3	21-0045	—

Revision History

REVISION NUMBER	REVISION DATE	DESCRIPTION	PAGES CHANGED
0	1/93	Initial release.	—
9	9/09	Changed column name in *Selection Table* to “Number of Receivers on Bus.”	1
10	9/14	Added MAX491MSD/PR and MAX491MSD/PR-T to data sheet. Updated *Absolute Maximum Ratings*.	2, 15

Maxim Integrated cannot assume responsibility for use of any circuitry other than circuitry entirely embodied in a Maxim Integrated product. No circuit patent licenses are implied. Maxim Integrated reserves the right to change the circuitry and specifications without notice at any time. The parametric values (min and max limits) shown in the Electrical Characteristics table are guaranteed. Other parametric values quoted in this data sheet are provided for guidance.

© 2014 Maxim Integrated Products, Inc. Maxim Integrated and the Maxim Integrated logo are trademarks of Maxim Integrated Products, Inc.