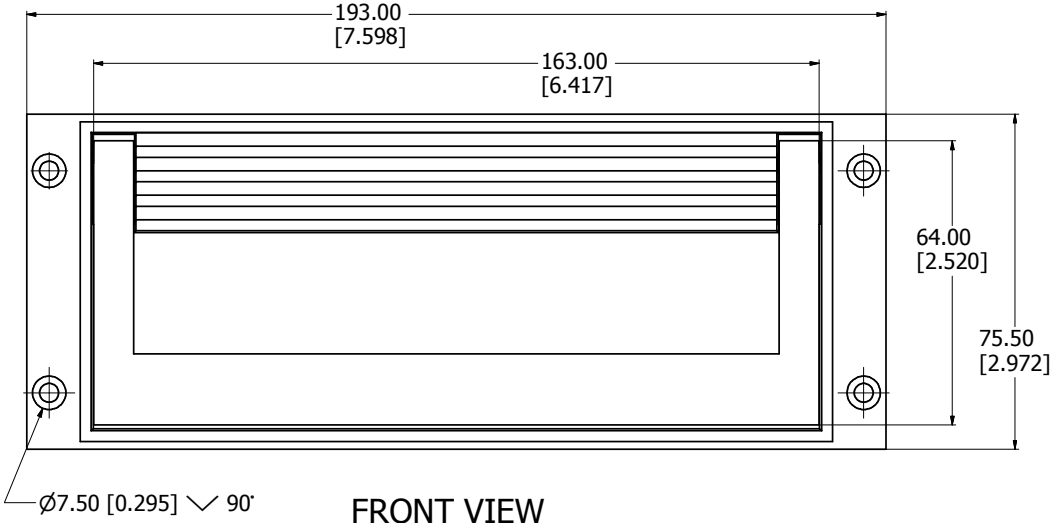

FRONT VIEW

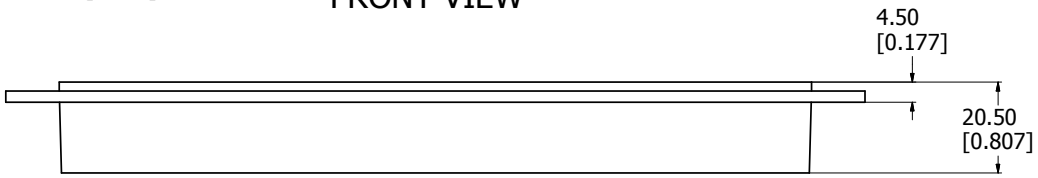

BOTTOM VIEW

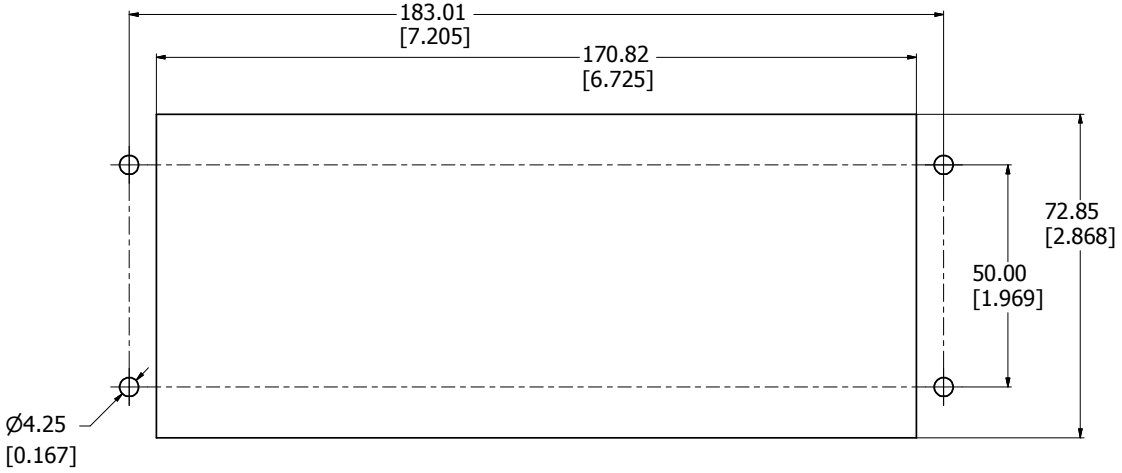

MOUNTING OPENING

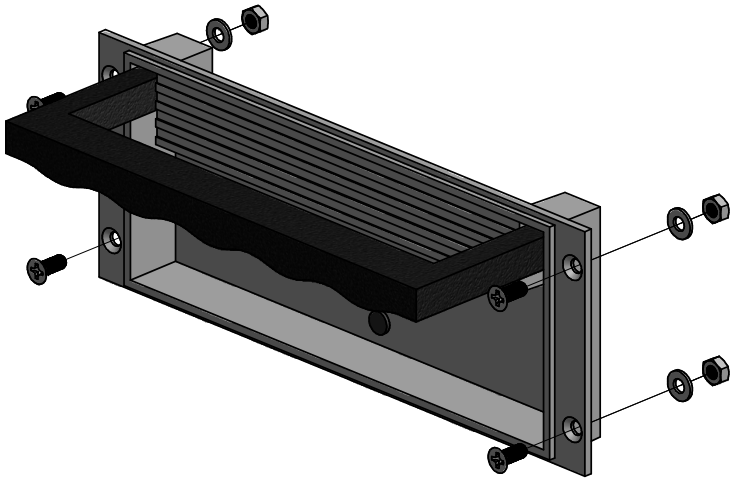

ISO VIEW WITH HANDLE OPEN

M3255-2001
Handle Material - Steel
Finish - Tray - Sliver
Handle - Matte Black
Hardware
8 Screws - Panhead M4 x 10
8 Nuts - M4
8 Washers
**note handle sold in pairs

HAMMOND MANUFACTURING™

M3255-2001