INLINE™ TYPE 4



INDUSTRY STANDARDS

Mounting brackets required to meet UL/CSA external mounting requirements.

UL 508A Listed; Type 3, 4, 12; File No. E61997
cUL Listed per CSA C22.2 No. 94; Type 3, 4, 12; File No. E61997

NEMA/EEMAC Type 4 and 12
CSA, File No. 42186: Type 4 and 12
IEC 60529, IP66

APPLICATION

Aesthetic styling, with an attractive, durable light-gray finish, makes INLINE™ Enclosures an excellent choice when style and functionality are important. INLINE Enclosures have an outward formed flange to prevent contaminants from entering the enclosure and are available in three versions: window door, hinged solid door and solid screw cover.

SPECIFICATIONS

- Metric dimensions
- 1.4-mm (16 gauge) steel
- Seams continuously welded and ground smooth
- External formed body flange
- Large perimeter body opening
- Fastening holes in back of body for direct mounting or optional external mounting brackets
- Seamless foam-in-place gasket
- Grounding stud on the body
- Bonding provision on the cover or door
- Furnished hardware kit includes panel mounting screws, grounding hardware and sealing washers for wall-mounting holes
- Installation instructions

INLINE Screw-Cover Enclosures
- Captivated cover screws with sealing bushings

INLINE Hinged-Door Enclosures
- 180-degree door opening
- Removable hinge pins
- Self-grounding, slotted quarter-turn latch

INLINE Window-Door Enclosures
- Flush-mounted 4.8-mm (3/16-in.) clear polycarbonate window
- 180-degree door opening
- Removable hinge pins
- Self-grounding, slotted quarter-turn latch

FINISH

RAL 7035 textured light-gray polyester powder paint inside and out

ACCESSORIES

See also Accessories.
DIN Rail or Panel-Mounting Brackets
DIN3 Rails
Lock Inserts
Mounting-Bracket Kit
Panels for Junction Boxes
Wing Knob Latch

MODIFICATION AND CUSTOMIZATION

Hoffman excels at modifying and customizing products to your specifications. Contact your local Hoffman sales office or distributor for complete information.

BULLETIN: A54

Standard Product **INLINE Screw-Cover Enclosures**

Catalog Number	AxBxC in./mm	Panel	Conductive Panel	Panel Size D x E mm/in.	Mounting G x H mm/in.	F mm/in.
LSC151512	5.91 x 5.91 x 4.72 150 x 150 x 120	LP1515	LP1515G	131 x 131 5.16 x 5.16	132 x 85 5.18 x 3.36	105 4.13
LSC201512	7.87 x 5.91 x 4.72 200 x 150 x 120	LP2015	LP2015G	181 x 131 7.13 x 5.16	182 x 85 7.15 x 3.36	105 4.13
LSC252015	9.84 x 7.87 x 5.91 250 x 200 x 150	LP2520	LP2520G	231 x 181 9.09 x 7.13	232 x 135 9.12 x 5.33	135 5.31
LSC302515	11.81 x 9.84 x 5.91 300 x 250 x 150	LP3025	LP3025G	281 x 231 11.06 x 9.09	281 x 185 11.08 x 7.30	135 5.31
LSC353020	13.78 x 11.81 x 7.87 350 x 300 x 200	LP3530	LP3530G	331 x 281 13.03 x 11.06	331 x 235 13.05 x 9.27	185 7.28

Purchase panels separately.

INLINE Screw Cover Enclosure

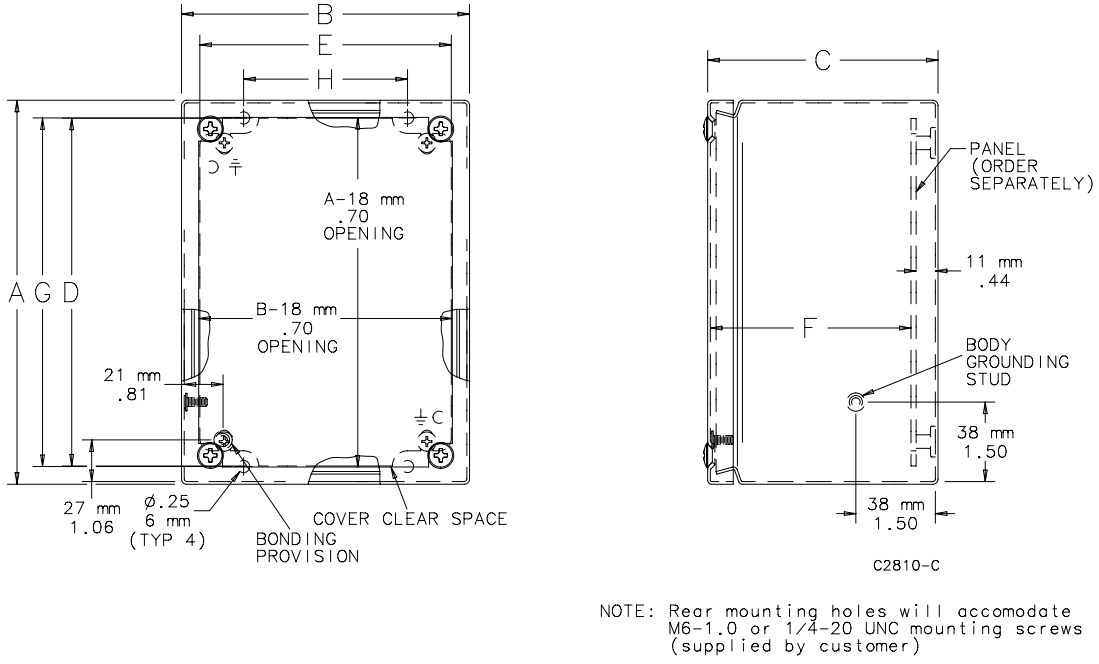

NOTE: Rear mounting holes will accomodate M6–1.0 or 1/4–20 UNC mounting screws (supplied by customer)

Standard Product **INLINE Hinged-Door Enclosures**

Catalog Number	AxBxC in./mm	Panel	Conductive Panel	Panel Size D x E mm/in.	Mounting G x H mm/in.	F mm/in.
LHC151512	5.91 x 5.91 x 4.72 150 x 150 x 120	LP1515	LP1515G	131 x 131 5.16 x 5.16	132 x 85 5.18 x 3.36	105 4.13
LHC201512	7.87 x 5.91 x 4.72 200 x 150 x 120	LP2015	LP2015G	181 x 131 7.13 x 5.16	182 x 85 7.15 x 3.36	105 4.13
LHC252015	9.84 x 7.87 x 5.91 250 x 200 x 150	LP2520	LP2520G	231 x 181 9.09 x 7.13	232 x 135 9.12 x 5.33	135 5.31
LHC302515	11.81 x 9.84 x 5.91 300 x 250 x 150	LP3025	LP3025G	281 x 231 11.06 x 9.09	281 x 185 11.08 x 7.30	135 5.31
LHC353020	13.78 x 11.81 x 7.87 350 x 300 x 200	LP3530	LP3530G	331 x 281 13.03 x 11.06	331 x 235 13.05 x 9.27	185 7.28

Purchase panels separately.

INLINE Hinged Door and Window Door Enclosures

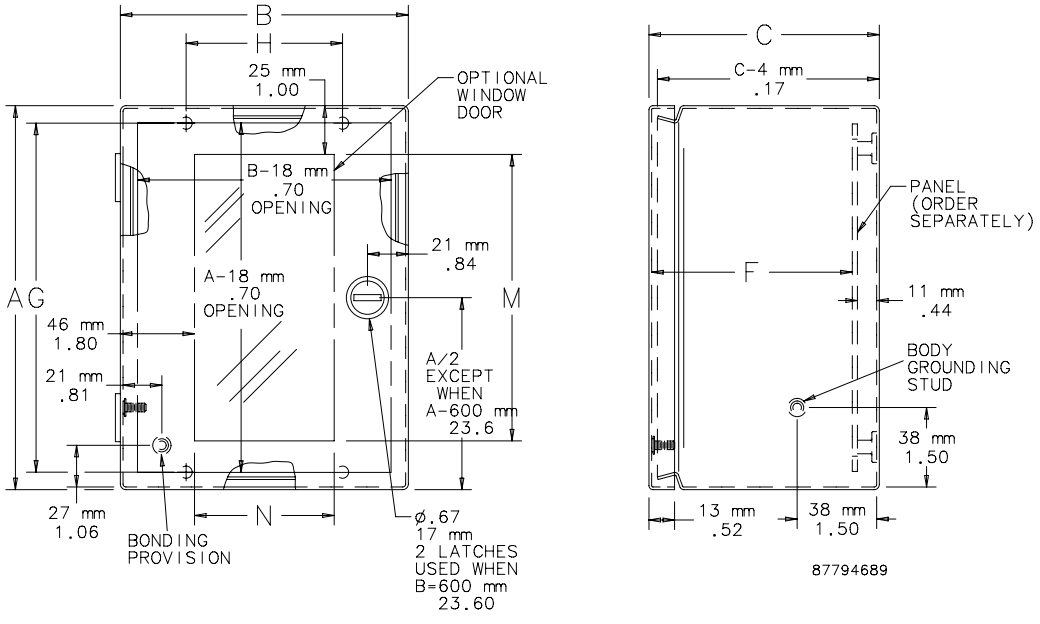

Standard Product **INLINE Window-Door Enclosures**

Catalog Number	AxBxC in./mm	Panel	Conductive Panel	Panel Size D x E mm/in.	Mounting G x H mm/in.	Window Size M x N mm/in.	F mm/in.
LWC201512	7.87 x 5.91 x 4.72 200 x 150 x 120	LP2015	LP2015G	181 x 131 7.13 x 5.16	182 x 85 7.15 x 3.36	149 x 65 5.87 x 2.31	101 3.98
LWC252015	9.84 x 7.87 x 5.91 250 x 200 x 150	LP2520	LP2520G	231 x 181 9.09 x 7.13	232 x 135 9.12 x 5.33	199 x 115 7.83 x 4.24	131 5.16
LWC302515	11.81 x 9.84 x 5.91 300 x 250 x 150	LP3025	LP3025G	281 x 231 11.06 x 9.09	281 x 185 11.08 x 7.30	249 x 165 9.80 x 6.25	131 5.16
LWC204015	7.87 x 15.75 x 5.91 200 x 400 x 150	LP2040	LP2040G	181 x 381 7.13 x 15.00	182 x 335 7.15 x 13.20	115 x 349 4.53 x 13.49	131 5.16
LWC206015	7.87 x 23.62 x 5.91 200 x 600 x 150	LP2060	LP2060G	181 x 581 7.13 x 21.06	182 x 535 7.15 x 21.08	115 x 549 4.53 x 21.36	131 5.16

Purchase panels separately.

LWC204015 and LWC206015 are hinged on "B" side of enclosure.

INLINE Hinged Door and Window Door Enclosures

