## INLINE™ TYPE 4



### INDUSTRY STANDARDS

*Mounting brackets required to meet UL/CSA external mounting requirements.*

UL 508A Listed; Type 3, 4, 12; File No. E61997
cUL Listed per CSA C22.2 No. 94; Type 3, 4, 12; File No. E61997

NEMA/EEMAC Type 4 and 12
CSA, File No. 42186: Type 4 and 12
IEC 60529, IP66

### APPLICATION

Aesthetic styling, with an attractive, durable light-gray finish, makes INLINE™ Enclosures an excellent choice when style and functionality are important. INLINE Enclosures have an outward formed flange to prevent contaminants from entering the enclosure and are available in three versions: window door, hinged solid door and solid screw cover.

### SPECIFICATIONS

- Metric dimensions
- 1.4-mm (16 gauge) steel
- Seams continuously welded and ground smooth
- External formed body flange
- Large perimeter body opening
- Fastening holes in back of body for direct mounting or optional external mounting brackets
- Seamless foam-in-place gasket
- Grounding stud on the body
- Bonding provision on the cover or door
- Furnished hardware kit includes panel mounting screws, grounding hardware and sealing washers for wall-mounting holes
- Installation instructions

**INLINE Screw-Cover Enclosures**
- Captivated cover screws with sealing bushings

**INLINE Hinged-Door Enclosures**
- 180-degree door opening
- Removable hinge pins
- Self-grounding, slotted quarter-turn latch

**INLINE Window-Door Enclosures**
- Flush-mounted 4.8-mm (3/16-in.) clear polycarbonate window
- 180-degree door opening
- Removable hinge pins
- Self-grounding, slotted quarter-turn latch

### FINISH

RAL 7035 textured light-gray polyester powder paint inside and out

### ACCESSORIES

*See also Accessories.*
DIN Rail or Panel-Mounting Brackets
DIN3 Rails
Lock Inserts
Mounting-Bracket Kit
Panels for Junction Boxes
Wing Knob Latch

### MODIFICATION AND CUSTOMIZATION

Hoffman excels at modifying and customizing products to your specifications. Contact your local Hoffman sales office or distributor for complete information.

**BULLETIN: A54**

## Standard Product **INLINE Screw-Cover Enclosures**

| Catalog Number | AxBxC in./mm | Panel | Conductive Panel | Panel Size D x E mm/in. | Mounting G x H mm/in. | F mm/in. |
|---|---|---|---|---|---|---|
| **LSC151512** | 5.91 x 5.91 x 4.72<br>150 x 150 x 120 | LP1515 | LP1515G | 131 x 131<br>5.16 x 5.16 | 132 x 85<br>5.18 x 3.36 | 105<br>4.13 |
| **LSC201512** | 7.87 x 5.91 x 4.72<br>200 x 150 x 120 | LP2015 | LP2015G | 181 x 131<br>7.13 x 5.16 | 182 x 85<br>7.15 x 3.36 | 105<br>4.13 |
| **LSC252015** | 9.84 x 7.87 x 5.91<br>250 x 200 x 150 | LP2520 | LP2520G | 231 x 181<br>9.09 x 7.13 | 232 x 135<br>9.12 x 5.33 | 135<br>5.31 |
| **LSC302515** | 11.81 x 9.84 x 5.91<br>300 x 250 x 150 | LP3025 | LP3025G | 281 x 231<br>11.06 x 9.09 | 281 x 185<br>11.08 x 7.30 | 135<br>5.31 |
| **LSC353020** | 13.78 x 11.81 x 7.87<br>350 x 300 x 200 | LP3530 | LP3530G | 331 x 281<br>13.03 x 11.06 | 331 x 235<br>13.05 x 9.27 | 185<br>7.28 |

Purchase panels separately.

INLINE Screw Cover Enclosure

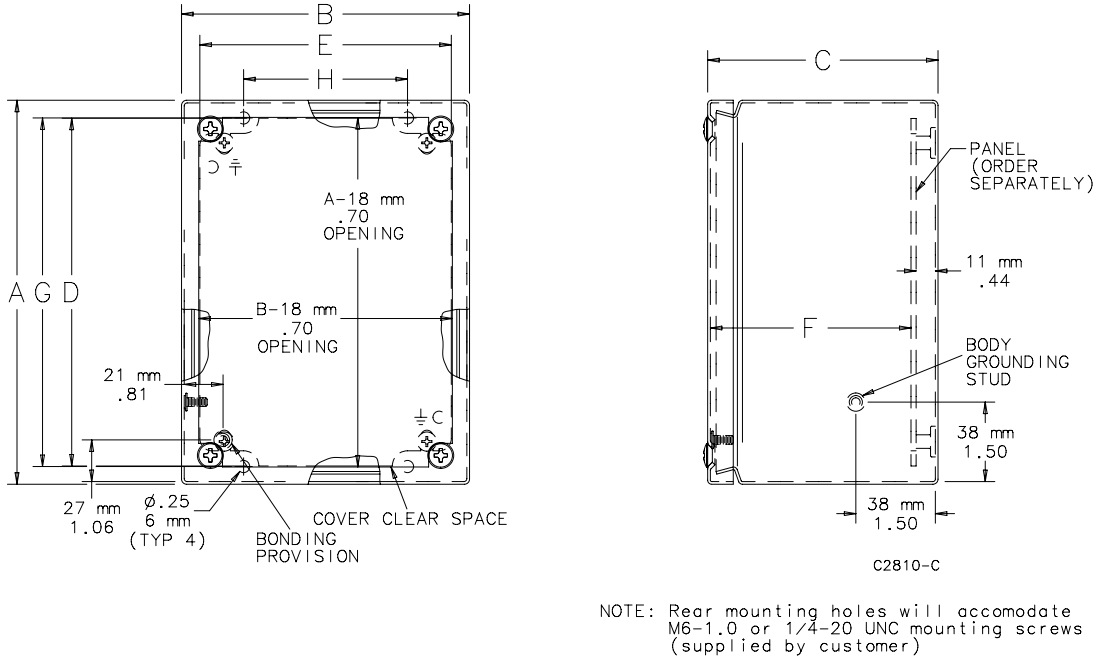


NOTE: Rear mounting holes will accomodate M6–1.0 or 1/4–20 UNC mounting screws (supplied by customer)

## Standard Product **INLINE Hinged-Door Enclosures**

| Catalog Number | AxBxC in./mm | Panel | Conductive Panel | Panel Size D x E mm/in. | Mounting G x H mm/in. | F mm/in. |
|---|---|---|---|---|---|---|
| LHC151512 | 5.91 x 5.91 x 4.72<br>150 x 150 x 120 | LP1515 | LP1515G | 131 x 131<br>5.16 x 5.16 | 132 x 85<br>5.18 x 3.36 | 105<br>4.13 |
| LHC201512 | 7.87 x 5.91 x 4.72<br>200 x 150 x 120 | LP2015 | LP2015G | 181 x 131<br>7.13 x 5.16 | 182 x 85<br>7.15 x 3.36 | 105<br>4.13 |
| LHC252015 | 9.84 x 7.87 x 5.91<br>250 x 200 x 150 | LP2520 | LP2520G | 231 x 181<br>9.09 x 7.13 | 232 x 135<br>9.12 x 5.33 | 135<br>5.31 |
| LHC302515 | 11.81 x 9.84 x 5.91<br>300 x 250 x 150 | LP3025 | LP3025G | 281 x 231<br>11.06 x 9.09 | 281 x 185<br>11.08 x 7.30 | 135<br>5.31 |
| LHC353020 | 13.78 x 11.81 x 7.87<br>350 x 300 x 200 | LP3530 | LP3530G | 331 x 281<br>13.03 x 11.06 | 331 x 235<br>13.05 x 9.27 | 185<br>7.28 |

Purchase panels separately.

INLINE Hinged Door and Window Door Enclosures

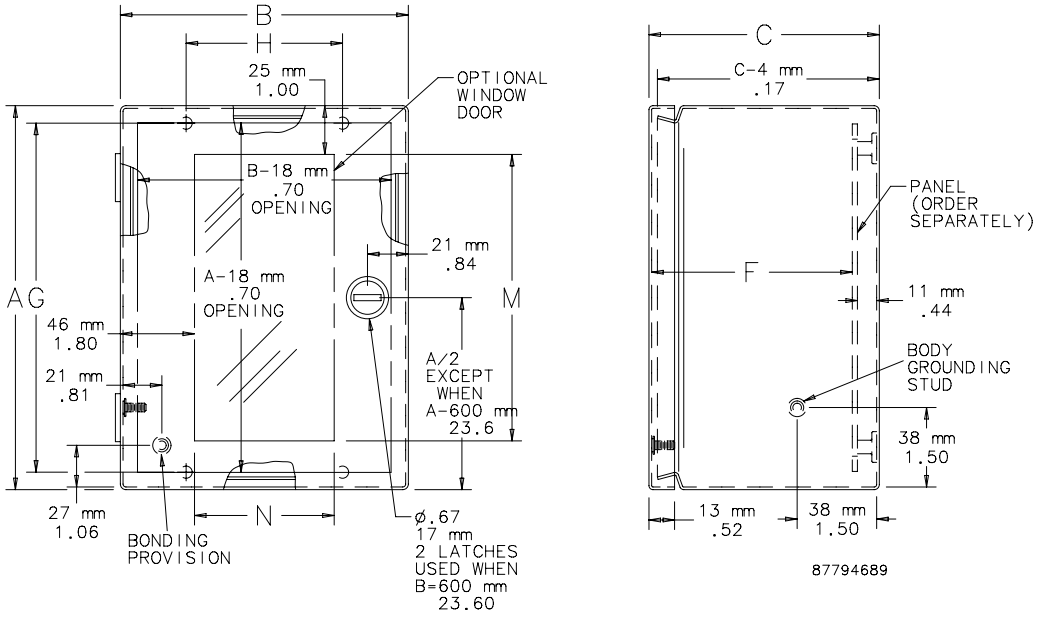

## Standard Product **INLINE Window-Door Enclosures**

| Catalog Number | AxBxC in./mm | Panel | Conductive Panel | Panel Size D x E mm/in. | Mounting G x H mm/in. | Window Size M x N mm/in. | F mm/in. |
|---|---|---|---|---|---|---|---|
| **LWC201512** | 7.87 x 5.91 x 4.72<br>200 x 150 x 120 | LP2015 | LP2015G | 181 x 131<br>7.13 x 5.16 | 182 x 85<br>7.15 x 3.36 | 149 x 65<br>5.87 x 2.31 | 101<br>3.98 |
| **LWC252015** | 9.84 x 7.87 x 5.91<br>250 x 200 x 150 | LP2520 | LP2520G | 231 x 181<br>9.09 x 7.13 | 232 x 135<br>9.12 x 5.33 | 199 x 115<br>7.83 x 4.24 | 131<br>5.16 |
| **LWC302515** | 11.81 x 9.84 x 5.91<br>300 x 250 x 150 | LP3025 | LP3025G | 281 x 231<br>11.06 x 9.09 | 281 x 185<br>11.08 x 7.30 | 249 x 165<br>9.80 x 6.25 | 131<br>5.16 |
| **LWC204015** | 7.87 x 15.75 x 5.91<br>200 x 400 x 150 | LP2040 | LP2040G | 181 x 381<br>7.13 x 15.00 | 182 x 335<br>7.15 x 13.20 | 115 x 349<br>4.53 x 13.49 | 131<br>5.16 |
| **LWC206015** | 7.87 x 23.62 x 5.91<br>200 x 600 x 150 | LP2060 | LP2060G | 181 x 581<br>7.13 x 21.06 | 182 x 535<br>7.15 x 21.08 | 115 x 549<br>4.53 x 21.36 | 131<br>5.16 |

Purchase panels separately.

LWC204015 and LWC206015 are hinged on "B" side of enclosure.

INLINE Hinged Door and Window Door Enclosures

