LMx38 5A Adjustable Regulators

1 Features

- Specified 7A peak output current
- Specified 5A output current
- Adjustable output down to 1.2V
- Specified thermal regulation
- Current limit constant with temperature
- P + product enhancement tested
- Output is short-circuit protected

2 Applications

- Adjustable power supplies
- Constant current regulators
- Battery chargers

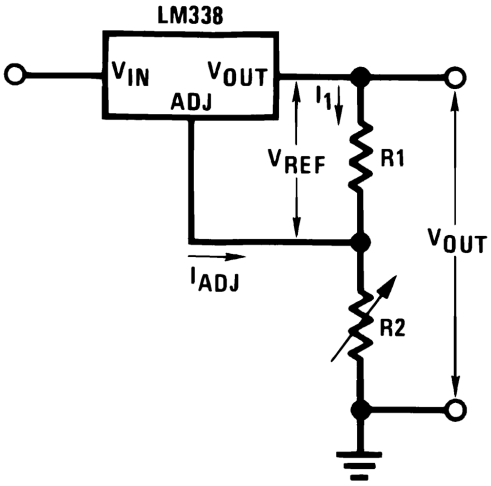

Typical Application Circuit

3 Description

The LM138 series of adjustable 3-pin positive voltage regulators is capable of supplying in excess of 5A over a 1.2V to 32V output range. They are exceptionally easy to use and require only two resistors to set the output voltage. Careful circuit design results in outstanding load and line regulation, comparable to many commercial power supplies. The LM138 family is supplied in a standard 3-lead transistor package.

A unique feature of the LM138 family is time-dependent current limiting. The current limit circuitry allows peak currents of up to 12A to be drawn from the regulator for short periods of time. This capability allows the LM138 to be used with heavy transient loads and speeds start-up under full-load conditions. Under sustained loading conditions, the current limit decreases to a safe value protecting the regulator. Also included on the chip are thermal overload protection and safe area protection for the power transistor. Overload protection remains functional even if the adjustment (ADJ) pin is accidentally disconnected.

Normally, no capacitors are needed unless the device is situated more than 6 inches from the input filter capacitors in which case an input bypass is needed. An output capacitor can be added to improve transient response, while bypassing the adjustment pin increases the ripple rejection of the regulator.

Package Information

PART NUMBER	PACKAGE(1)	PACKAGE SIZE(2)
LM138	NDS (TO-CAN, 2)	38.94mm × 24.89mm
LM338	NDE (TO-220, 3)	10.16mm × 4.58mm
	NDS (TO-CAN, 2)	38.94mm × 24.89mm

(1) For more information, see the *Mechanical, Packaging, and Orderable Information*.
(2) The package size (length × width) is a nominal value and includes pins, where applicable.

An IMPORTANT NOTICE at the end of this data sheet addresses availability, warranty, changes, use in safety-critical applications, intellectual property matters and other important disclaimers. PRODUCTION DATA.

Besides replacing fixed regulators or discrete designs, the LM138 is useful in a wide variety of other applications. Because the regulator is floating and receives only the input-to-output differential voltage, supplies of several hundred volts can be regulated as long as the maximum input to output differential is not exceeded; do not short-circuit output to ground. The part numbers in the LM138 series which have a *K* suffix are packaged in a standard steel TO-CAN package, while those with a *T* suffix are packaged in a TO-220 plastic package. The LM138 is rated for T_J = –55°C to 150°C, and the LM338 is rated for T_J = 0°C to 125°C.

Copyright © 2025 Texas Instruments Incorporated

Table of Contents

1 Features....1
2 Applications....1
3 Description....1
4 Pin Configuration and Functions....4
5 Specifications....5
5.1 Absolute Maximum Ratings....5
5.2 Recommended Operating Conditions....5
5.3 Thermal Information....5
5.4 Electrical Characteristics: LM138....6
5.5 Electrical Characteristics: LM338....7
5.6 Typical Characteristics....8
6 Detailed Description....11
6.1 Overview....11
6.2 Functional Block Diagram....11
6.3 Feature Description....11
6.4 Device Functional Modes....12
7 Application and Implementation....13
7.1 Application Information....13
7.2 Typical Applications....14
7.3 System Examples....18
7.4 Power Supply Recommendations....28
7.5 Layout....28
8 Device and Documentation Support....30
8.1 Receiving Notification of Documentation Updates....30
8.2 Support Resources....30
8.3 Trademarks....30
8.4 Electrostatic Discharge Caution....30
8.5 Glossary....30
9 Revision History....30
10 Mechanical, Packaging, and Orderable Information....30

Copyright © 2025 Texas Instruments Incorporated

4 Pin Configuration and Functions

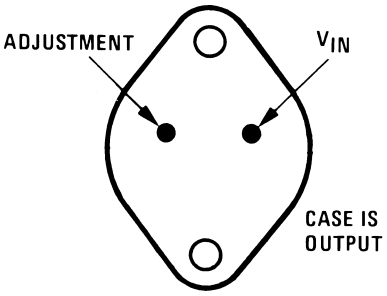

Package Number NDS0002A

Figure 4-1. NDS Package, 2-Pin TO-CAN (Bottom View)

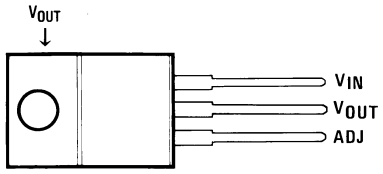

Package Number NDE0003B

Figure 4-2. NDE Package, 3-Pin TO-220 (Front View)

Table 4-1. Pin Functions

PIN			TYPE	DESCRIPTION
NAME	TO-220	TO-CAN		
ADJ	1	1	I	Output voltage adjustment pin. Connect to a resistor divider to set V_O.
V_{IN}	3	2	I	Supply input pin.
V_{OUT}	2	Case	O	Voltage output pin.

Copyright © 2025 Texas Instruments Incorporated

5 Specifications

5.1 Absolute Maximum Ratings

over operating free-air temperature range (unless otherwise noted) (1)

		MIN	MAX	UNIT
Input and output voltage differential		–0.3	40	V
Power dissipation		Internally limited		
Lead temperature	TO-3 package (soldering, 10 s)		300	°C
	TO-220 package (soldering, 4 s)		260	
Operating temperature, T_J	LM138	–55	150	°C
	LM338	0	125	
Storage temperature, T_{stg}		–65	150	°C

(1) Stresses beyond those listed under *Absolute Maximum Ratings* may cause permanent damage to the device. These are stress ratings only, which do not imply functional operation of the device at these or any other conditions beyond those indicated under *Recommended Operating Conditions*. Exposure to absolute-maximum-rated conditions for extended periods may affect device reliability.

5.2 Recommended Operating Conditions

over operating free-air temperature range (unless otherwise noted)

	MIN	MAX	UNIT
Input-to-output voltage differential	3	40	V
Output current		5	A

5.3 Thermal Information

THERMAL METRIC(1)		LM338	LM338		UNIT
		NDS (TO-CAN)	NDE (TO-220)	NDS (TO-CAN)	
		2 PINS	3 PINS	2 PINS	
$R_{\theta JA}$	Junction-to-ambient thermal resistance	35	22.9	35	°C/W
$R_{\theta JC(top)}$	Junction-to-case (top) thermal resistance	1	15.7	1	°C/W
$R_{\theta JB}$	Junction-to-board thermal resistance	—	4.1	—	°C/W
ψ_{JT}	Junction-to-top characterization parameter	—	2.1	—	°C/W
ψ_{JB}	Junction-to-board characterization parameter	—	4.1	—	°C/W
$R_{\theta JC(bot)}$	Junction-to-case (bottom) thermal resistance	—	0.7	—	°C/W

(1) For more information about traditional and new thermal metrics, see the Semiconductor and IC Package Thermal Metrics application note.

Copyright © 2025 Texas Instruments Incorporated

5.4 Electrical Characteristics: LM138

Values apply for T_J = 25°C; $V_{IN} – V_{OUT}$ = 5 V; and I_{OUT} = 10 mA (unless otherwise noted).(1)

PARAMETER		TEST CONDITIONS		MIN	TYP	MAX	UNIT
V_{REF}	Reference voltage	3 V ≤ ($V_{IN} – V_{OUT}$) ≤ 35 V, 10 mA ≤ I_{OUT} ≤ 5 A, P ≤ 50 W, T_J = –55°C to 150°C		1.19	1.24	1.29	V
V_{RLINE}	Line regulation	3 V ≤ ($V_{IN} – V_{OUT}$) ≤ 35 V(2)	T_J = 25°C		0.005%	0.01%	V
			T_J = –55°C to 150°C		0.02%	0.04%	V
V_{RLOAD}	Load regulation	10 mA ≤ I_{OUT} ≤ 5 A(2)	T_J = 25°C		0.1%	0.3%	
			T_J = –55°C to 150°C		0.3%	0.6%	
	Thermal regulation	20 ms pulse			0.002%	0.01%	W
I_{ADJ}	Adjustment pin current	T_J = –55°C to 150°C			45	100	µA
ΔI_{ADJ}	Adjustment pin current change	10 mA ≤ I_{OUT} ≤ 5 A, 3 V ≤ ($V_{IN} – V_{OUT}$) ≤ 35 V, T_J = –55°C to 150°C			0.2	5	µA
$\Delta V_{R/T}$	Temperature stability	T_J = –55°C to 150°C			1%		
$I_{LOAD(MIN)}$	Minimum load current	$V_{IN} – V_{OUT}$ = 35 V, T_J = –55°C to 150°C			3.5	5	mA
I_{CL}	Current limit	$V_{IN} – V_{OUT}$ ≤ 10 V					
		DC, T_J = –55°C to 150°C		5	8		A
		0.5-ms peak, T_J = –55°C to 150°C		7	12		A
		$V_{IN} – V_{OUT}$ = 30 V			1	1	A
V_N	RMS output noise (percent of V_{OUT})	10 Hz ≤ f ≤ 10 kHz			0.003%		
$\Delta V_R/\Delta V_{IN}$	Ripple rejection ratio	V_{OUT} = 10 V, f = 120 Hz, C_{ADJ} = 0 µF, T_J = –55°C to 150°C			60		dB
		V_{OUT} = 10 V, f = 120 Hz, C_{ADJ} = 10 µF, T_J = –55°C to 150°C		60	75		dB
	Long-term stability	T_J = 125°C, 1000 Hrs			0.3%	1%	

(1) These specifications are applicable for power dissipation up to 50 W for the TO-3 (NDS) package and 25 W for the TO-220 (NDE) package. Power dissipation is specified at these values up to 15-V input-output differential. Above 15-V differential, power dissipation is limited by internal protection circuitry. All limits (that is, the numbers in the minimum and maximum columns) are specified to TI's AOQL (Average Outgoing Quality Level).

(2) Regulation is measured at a constant junction temperature, using pulse testing with a low duty cycle. Changes in output voltage due to heating effects are covered under the specifications for thermal regulation.

Copyright © 2025 Texas Instruments Incorporated

5.5 Electrical Characteristics: LM338

Values apply for T_J = 25°C; $V_{IN} – V_{OUT}$ = 5 V; and I_{OUT} = 10 mA (unless otherwise noted).(1)

PARAMETER		TEST CONDITIONS		MIN	TYP	MAX	UNIT
V_{REF}	Reference voltage	3 V ≤ ($V_{IN} – V_{OUT}$) ≤ 35 V, 10 mA ≤ I_{OUT} ≤ 5 A, P ≤ 50 W, T_J = 0°C to 125°C		1.19	1.24	1.29	V
V_{RLINE}	Line regulation	3 V ≤ ($V_{IN} – V_{OUT}$) ≤ 35 V(2)	T_J = 25°C		0.005%	0.03%	V
			T_J = 0°C to 125°C		0.02%	0.06%	V
V_{RLOAD}	Load regulation	10 mA ≤ I_{OUT} ≤ 5 A(2)	T_J = 25°C		0.1	0.5	
			T_J = 0°C to 125°C		0.3	1	
	Thermal regulation	20-ms pulse			0.002%	0.02%	W
I_{ADJ}	Adjustment pin current	T_J = 0°C to 125°C			45	100	µA
ΔI_{ADJ}	Adjustment pin current change	10 mA ≤ I_{OUT} ≤ 5 A, 3 V ≤ ($V_{IN} – V_{OUT}$) ≤ 35 V, T_J = 0°C to 125°C			0.2	5	µA
$\Delta V_{R/T}$	Temperature stability	T_J = 0°C to 125°C			1		
$I_{LOAD(MIN)}$	Minimum load current	$V_{IN} – V_{OUT}$ = 35 V, T_J = 0°C to 125°C			3.5	10	mA
I_{CL}	Current limit	$V_{IN} – V_{OUT}$ ≤ 10 V					
		DC, T_J = 0°C to 125°C		5	8		A
		0.5-ms peak, T_J = 0°C to 125°C		7	12		A
		$V_{IN} – V_{OUT}$ = 30 V				1	A
V_N	RMS output noise (percent of V_{OUT})	10 Hz ≤ f ≤ 10 kHz			0.003%		
$\Delta V_R/\Delta V_{IN}$	Ripple rejection ratio	V_{OUT} = 10 V, f = 120 Hz, C_{ADJ} = 0 µF, T_J = 0°C to 125°C			60		dB
		V_{OUT} = 10 V, f = 120 Hz, C_{ADJ} = 10 µF, T_J = 0°C to 125°C		60	75		dB
	Long-term stability	T_J = 125°C, 1000 Hrs			0.3%	1%	

(1) These specifications are applicable for power dissipation up to 50 W for the TO-3 (NDS) package and 25 W for the TO-220 (NDE) package. Power dissipation is specified at these values up to 15-V input-output differential. Above 15-V differential, power dissipation is limited by internal protection circuitry. All limits (that is, the numbers in the minimum and maximum columns) are specified to TI's AOQL (Average Outgoing Quality Level).

(2) Regulation is measured at a constant junction temperature, using pulse testing with a low duty cycle. Changes in output voltage due to heating effects are covered under the specifications for thermal regulation.

Copyright © 2025 Texas Instruments Incorporated

5.6 Typical Characteristics

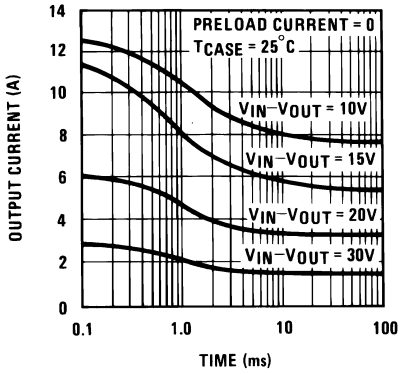

Figure 5-1. Current Limit

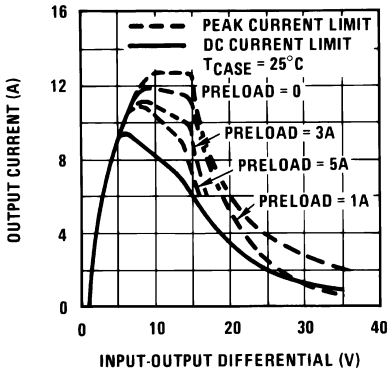

Figure 5-2. Current Limit

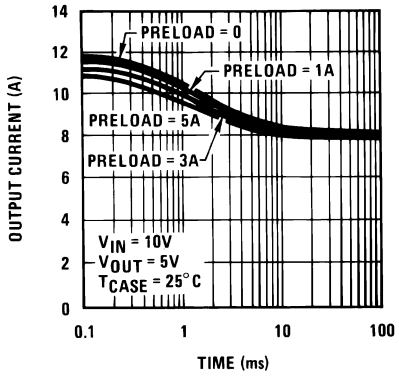

Figure 5-3. Current Limit

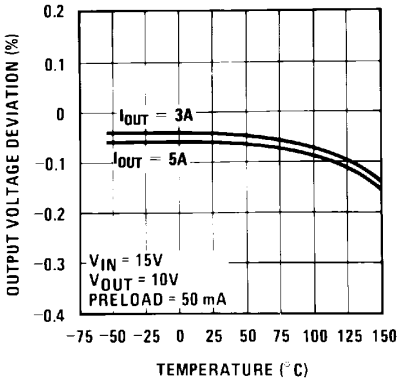

Figure 5-4. Load Regulation

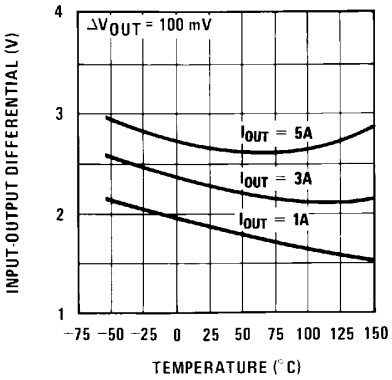

Figure 5-5. Dropout Voltage

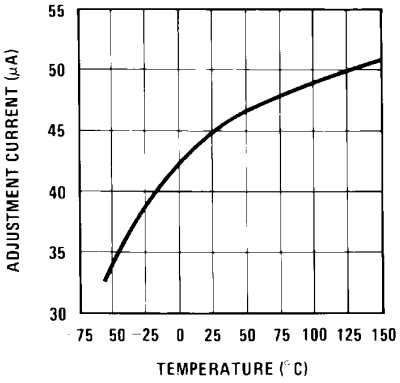

Figure 5-6. Adjustment Current

Copyright © 2025 Texas Instruments Incorporated

5.6 Typical Characteristics (continued)

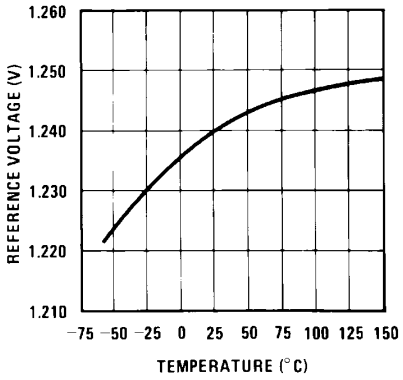

Figure 5-7. Temperature Stability

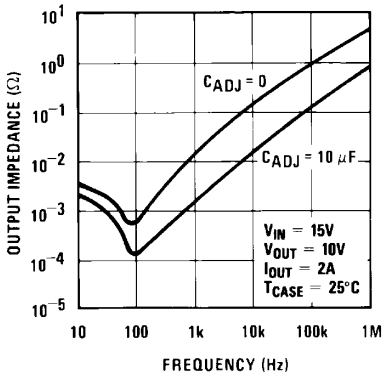

Figure 5-8. Output Impedance

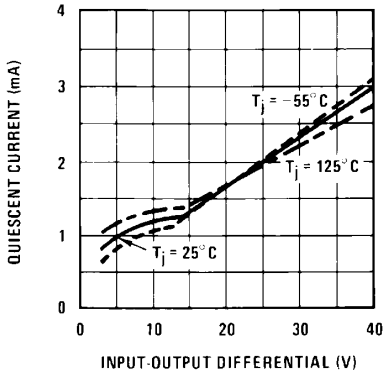

Figure 5-9. Minimum Operating Current

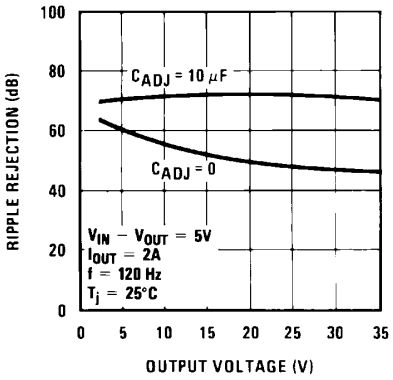

Figure 5-10. Ripple Rejection

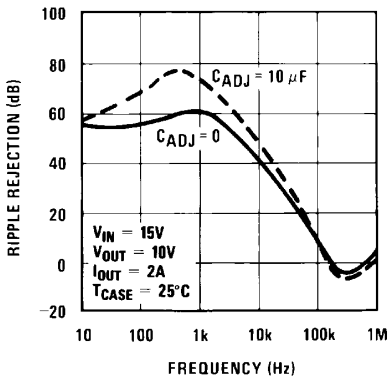

Figure 5-11. Ripple Rejection

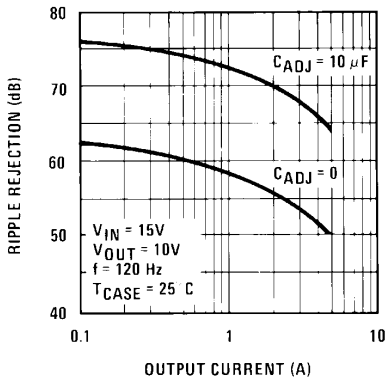

Figure 5-12. Ripple Rejection

Copyright © 2025 Texas Instruments Incorporated

5.6 Typical Characteristics (continued)

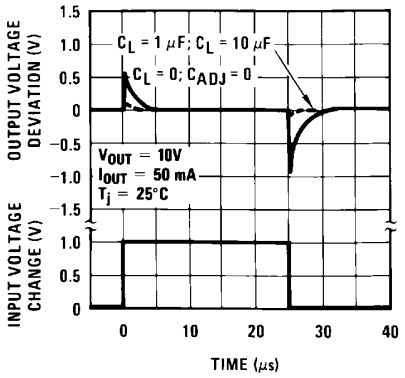

Figure 5-13. Line Transient Response

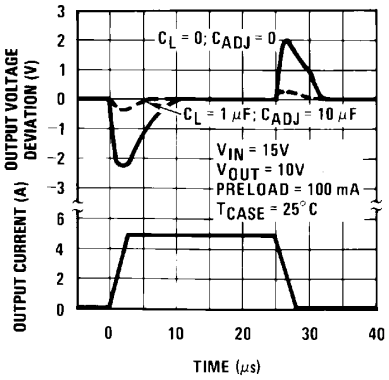

Figure 5-14. Load Transient Response

Copyright © 2025 Texas Instruments Incorporated

6 Detailed Description

6.1 Overview

The LM138 and LM338 devices are adjustable, three-terminal, positive-voltage regulators capable of supplying more than 5 A over an output-voltage range of 1.2 V to 32 V. It requires only two external resistors to set the output voltage. These devices feature a typical line regulation of 0.005% and typical load regulation of 0.1%. It includes time-dependent current limiting, thermal overload protection, and safe operating area protection. Overload protection remains functional even if the ADJUST terminal is disconnected.

The LM138 and LM338 devices are versatile in their applications, including uses in programmable output regulation and local on-card regulation. Or, by connecting a fixed resistor between the ADJUST and OUTPUT terminals, the LM138 and LM338 devices can function as a precision current regulators. An optional output capacitor can be added to improve transient response. The ADJUST terminal can be bypassed to achieve very high ripple-rejection ratios, which are difficult to achieve with standard three-terminal regulators.

6.2 Functional Block Diagram

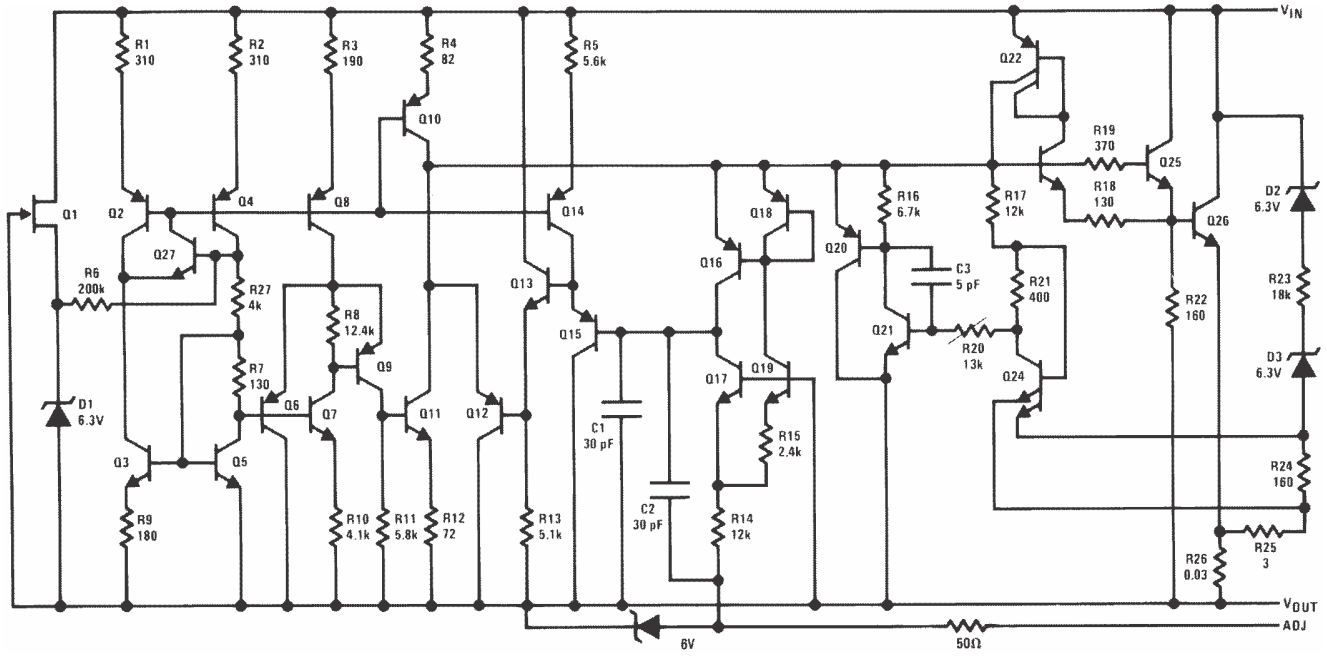

6.3 Feature Description

6.3.1 NPN Darlington Output Drive

NPN Darlington output topology provides naturally low output impedance and an output capacitor is optional. To support maximum current and lowest temperature, 3-V headroom is recommended ($V_I - V_O$).

6.3.2 Overload Block

Overcurrent and overtemperature shutdown protects the device against overload or damage from operating in excessive heat.

6.3.3 Programmable Feedback

Op amp with 1.25-V offset input at the ADJUST terminal provides easy output voltage or current (not both) programming. For current regulation applications, a single resistor whose resistance value is 1.25 V/IO and power rating is greater than 1.25 V^2/R must be used. For voltage regulation applications, two resistors set the output voltage.

Copyright © 2025 Texas Instruments Incorporated

6.4 Device Functional Modes

6.4.1 Normal Operation

The device OUTPUT pin sources current necessary to make OUTPUT pin 1.25 V greater than ADJUST terminal to provide output regulation.

6.4.2 Operation With Low Input Voltage

The device requires up to 3-V headroom ($V_I – V_O$) to operate in regulation. With less headroom, the device may drop out and OUTPUT voltage is INPUT voltage minus drop out voltage.

6.4.3 Operation at Light Loads

The device passes its bias current to the OUTPUT pin. The load or feedback must consume this minimum current for regulation or the output may be too high. A 250-Ω feedback resistor between OUTPUT and ADJUST consumes the worst case minimum load current of 5 mA.

6.4.4 Operation in Self Protection

When an overload occurs, the device shuts down Darlington NPN output stage or reduces the output current to prevent device damage. The device automatically resets from the overload. The output may be reduced or alternate between on and off until the overload is removed.

Copyright © 2025 Texas Instruments Incorporated

7 Application and Implementation

Note

Information in the following applications sections is not part of the TI component specification, and TI does not warrant its accuracy or completeness. TI's customers are responsible for determining suitability of components for their purposes, as well as validating and testing their design implementation to confirm system functionality.

7.1 Application Information

In operation, the LM138 develops a nominal 1.25-V reference voltage (V_{REF}) between the output and adjustment terminal. The reference voltage is impressed across program resistor R_1 and, since the voltage is constant, a constant current I_1 then flows through the output set resistor R_2, giving an output voltage calculated with Equation 1.

$$V_{OUT} = V_{REF}\left(1 + \frac{R2}{R1}\right) + I_{ADJ}R2 \quad (1)$$

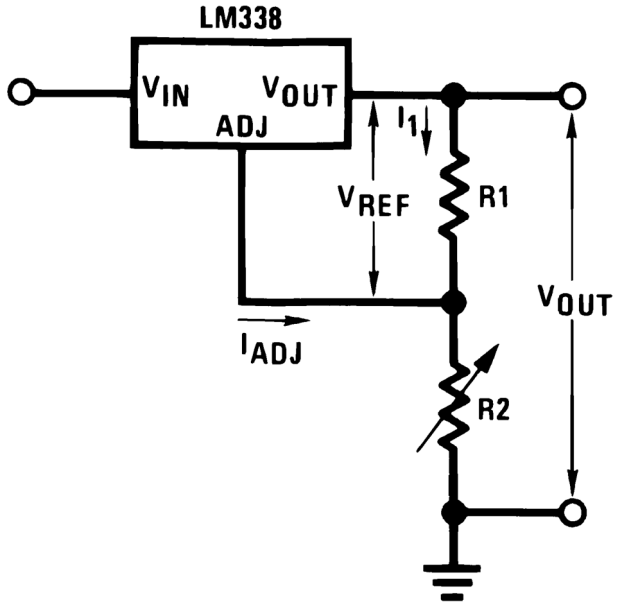

Figure 7-1. Typical Application Circuit

Because the 50-µA current from the adjustment terminal represents an error term, the LM138 was designed to minimize I_{ADJ} and make it very constant with line and load changes. To do this, all quiescent operating current is returned to the output establishing a minimum load current requirement. If there is insufficient load on the output, the output rises.

Copyright © 2025 Texas Instruments Incorporated

7.2 Typical Applications

7.2.1 Constant 5-V Regulator

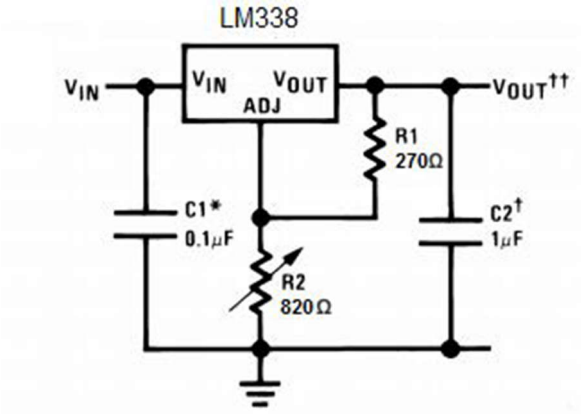

*Needed if device is more than 6 inches from filter capacitors.

†Optional—improves transient response

†† $V_{OUT} = 1.25\ V\left(1+\frac{R2}{R1}\right)+I_{ADJ}(R_2)$

Figure 7-2. Constant 5-V Regulator

7.2.1.1 Design Requirements

R1: Because the LM138 produces a typical 1.24 V potential between the OUTPUT and ADJUST pins, placing a 270-Ω resistor between them causes 4.6 mA to flow through R1 and R2.

R2: To achieve a 5-V output, the sum of the voltages across R1 and R2 must equal 5 V. Therefore, Vr2 must equal 3.76 V when 4.6 mA is flowing through it. R2 = Vr2 / I = 3.76 V / 4.6 mA = ~820 Ω.

C_{IN}: 0.1 μF of input capacitance helps filter out unwanted noise, especially if the regulator is located far from the power supply filter capacitors.

C_{OUT}: The regulator is stable without any output capacitance, but adding a 1-μF capacitor improves the transient response.

C_{ADJ}: A 10-μF capacitor bypassing the ADJUST pin to ground improves the regulators ripple rejection.

D1: Protection diode D1 is recommended if C_{OUT} is used. The diode provides a low-impedance discharge path to prevent the capacitor from discharging into the output of the regulator (see the *Protection Diodes* section).

D2: Protection diode D2 is recommended if C_{ADJ} is used. The diode provides a low-impedance discharge path to prevent the capacitor from discharging into the output of the regulator (see the *Protection Diodes* section).

Table 7-1 lists the design parameters for this typical application.

Copyright © 2025 Texas Instruments Incorporated

Table 7-1. Design Parameters

PARAMETER	VALUE
Feedback resistor 1 (R1)	270 Ω
Feedback resistor 2 (R2)	820 Ω
Input capacitor (C_{IN})	0.1 µF
Output capacitor (C_{OUT})	1 µF
Adjust capacitor(C_{ADJ})	10 µF

7.2.1.2 Detailed Design Procedure

7.2.1.2.1 External Capacitors

An input bypass capacitor is recommended. A 0.1-µF disc or 1-µF solid tantalum on the input is suitable input bypassing for almost all applications. The device is more sensitive to the absence of input bypassing when adjustment or output capacitors are used but the above values eliminate the possibility of problems.

The adjustment terminal can be bypassed to ground on the LM138 to improve ripple rejection. This bypass capacitor prevents ripple from being amplified as the output voltage is increased. With a 10-µF bypass capacitor, 75-dB ripple rejection is obtainable at any output level. Increases over 20 µF do not appreciably improve the ripple rejection at frequencies above 120 Hz. If the bypass capacitor is used, it is sometimes necessary to include protection diodes to prevent the capacitor from discharging through internal low current paths and damaging the device.

In general, the best type of capacitors to use are solid tantalum. Solid tantalum capacitors have low impedance even at high frequencies. Depending upon capacitor construction, it takes about 25 µF in aluminum electrolytic to equal 1-µF solid tantalum at high frequencies. Ceramic capacitors are also good at high frequencies; but some types have a large decrease in capacitance at frequencies around 0.5 MHz. For this reason, 0.01-µF disc may seem to work better than a 0.1-µF disc as a bypass.

Although the LM138 is stable with no output capacitors, like any feedback circuit, certain values of external capacitance can cause excessive ringing. This occurs with values between 500 pF and 5000 pF. A 1-µF solid tantalum (or 25-µF aluminum electrolytic) on the output swamps this effect and insures stability.

7.2.1.2.2 Load Regulation

The LM138 is capable of providing extremely good load regulation but a few precautions are needed to obtain maximum performance. The current set resistor connected between the adjustment terminal and the output terminal (usually 240 Ω) must be tied directly to the output of the regulator (case) rather than near the load. This eliminates line drops from appearing effectively in series with the reference and degrading regulation. For example, a 15-V regulator with 0.05-Ω resistance between the regulator and load has a load regulation due to line resistance of 0.05 Ω × I_L. If the set resistor is connected near the load, the effective line resistance is 0.05 Ω (1 + R2/R1) or in this case, 11.5 times worse.

Figure 7-3 shows the effect of resistance between the regulator and 240-Ω set resistor.

Copyright © 2025 Texas Instruments Incorporated

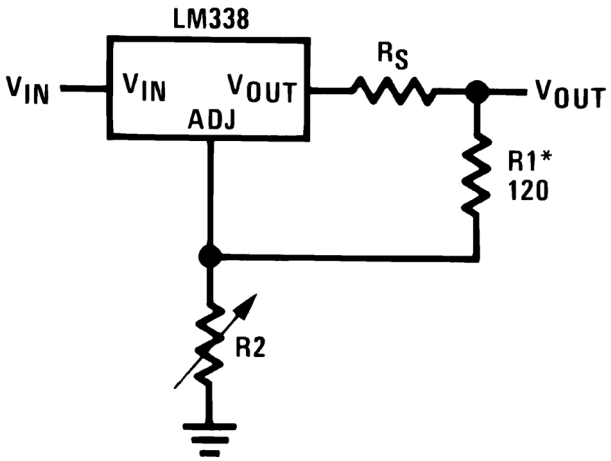

Figure 7-3. Regulator With Line Resistance in Output Lead

With the TO-3 package, it is easy to minimize the resistance from the case to the set resistor, by using 2 separate leads to the case. The ground of R2 can be returned near the ground of the load to provide remote ground sensing and improve load regulation.

7.2.1.2.3 Protection Diodes

When external capacitors are used with *any* IC regulator it is sometimes necessary to add protection diodes to prevent the capacitors from discharging through low current points into the regulator. Most 20-µF capacitors have low enough internal series resistance to deliver 20-A spikes when shorted. Although the surge is short, there is enough energy to damage parts of the IC.

When an output capacitor is connected to a regulator and the input is shorted, the output capacitor discharges into the output of the regulator. The discharge current depends on the value of the capacitor, the output voltage of the regulator, and the rate of decrease of V_{IN}. In the LM138 this discharge path is through a large junction that is able to sustain 25-A surge with no problem. This is not true of other types of positive regulators. For output capacitors of 100 µF or less at output of 15 V or less, there is no need to use diodes.

The bypass capacitor on the adjustment terminal can discharge through a low current junction. Discharge occurs when *either* the input or output is shorted. Internal to the LM138 is a 50-Ω resistor which limits the peak discharge current. No protection is needed for output voltages of 25-V or less and 10-µF capacitance. Figure 7-4 shows an LM138 with protection diodes included for use with outputs greater than 25 V and high values of output capacitance.

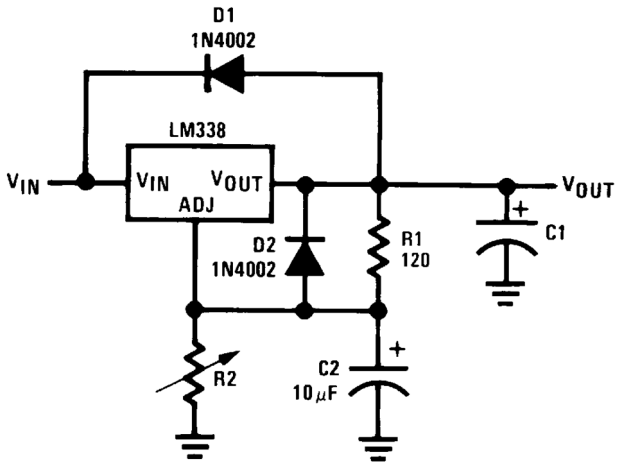

Copyright © 2025 Texas Instruments Incorporated

$$V_{OUT} = 1.25V \left(1 + \frac{R2}{R1}\right) + I_{ADJ}R2$$

D1 protects against C1, D2 protects against C2.

Figure 7-4. Regulator With Protection Diodes

7.2.1.3 Application Curves

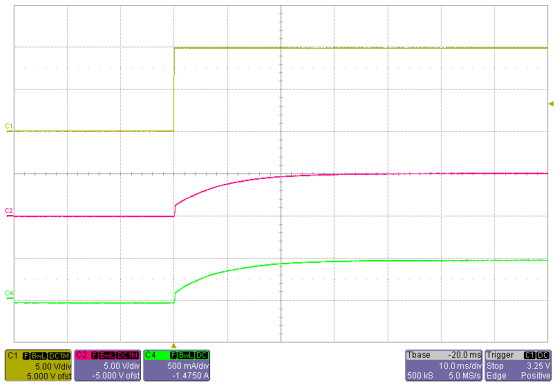

Figure 7-5. Regulator Start-Up

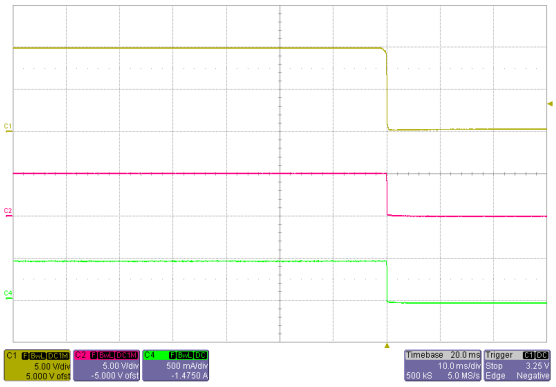

Figure 7-6. Regulator Shutdown

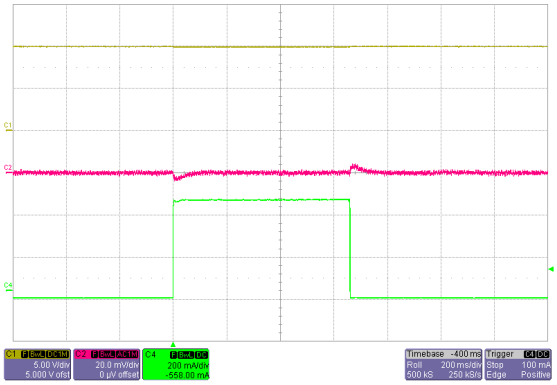

Figure 7-7. Regulator Response to Load Step

7.3 System Examples

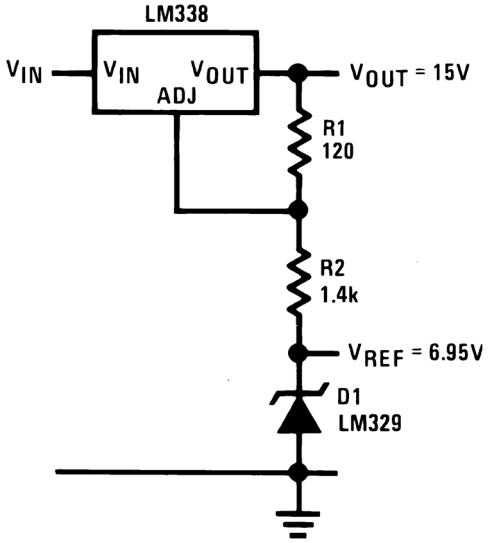

Figure 7-8. Regulator and Voltage Reference

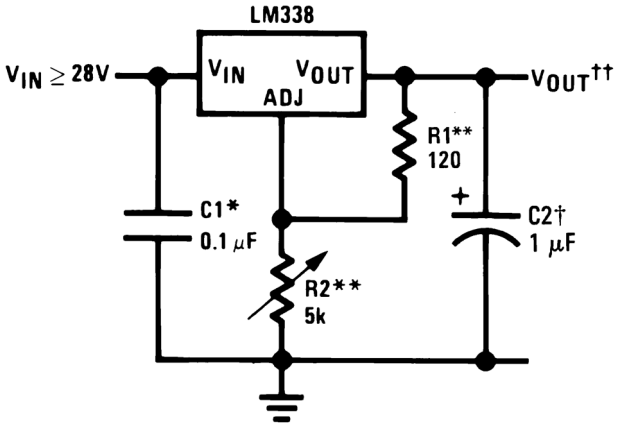

Figure 7-9. 1.2-V to 25-V Adjustable Regulator

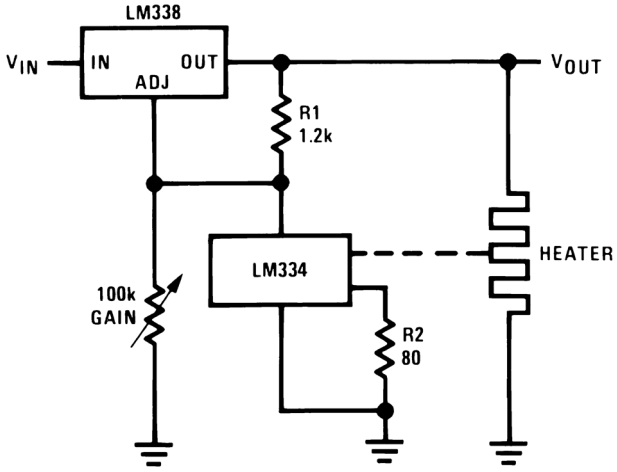

Full output current not available at high input-output voltages †Optional—improves transient response. Output capacitors in the range of 1 µF to 1000 µF of aluminum or tantalum electrolytic are commonly used to provide improved output impedance and rejection of transients. *Needed if device is more than 6 inches from filter capacitors.

Copyright © 2025 Texas Instruments Incorporated

$$\dagger\dagger V_{OUT} = 1.25V \left(1 + \frac{R2}{R1}\right) + I_{ADJ}(R_2)$$

**R1 = 240 Ω for LM138. R1, R2 as an assembly can be ordered from Bourns: MIL part no. 7105A-AT2-502 COMM part no. 7105A-AT7-502

Figure 7-10. Temperature Controller

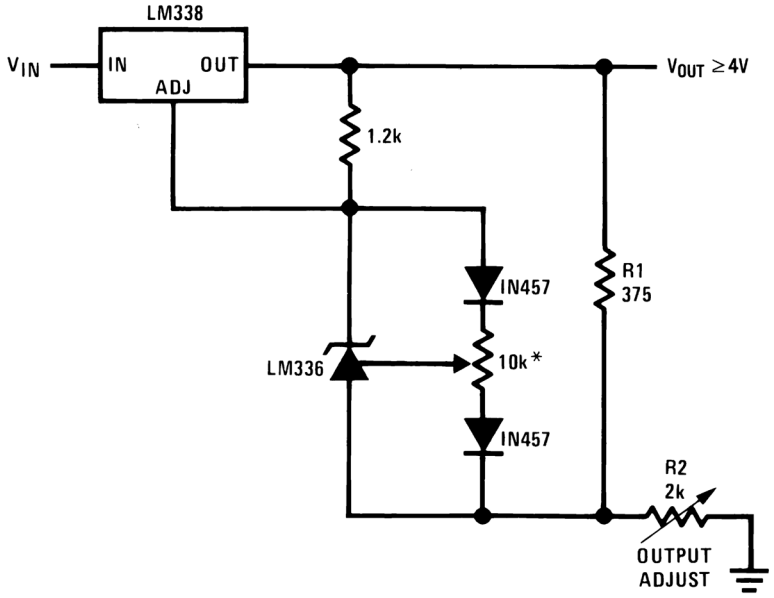

* Adjust for 3.75 across R1

Figure 7-11. Precision Power Regulator With Low Temperature Coefficient

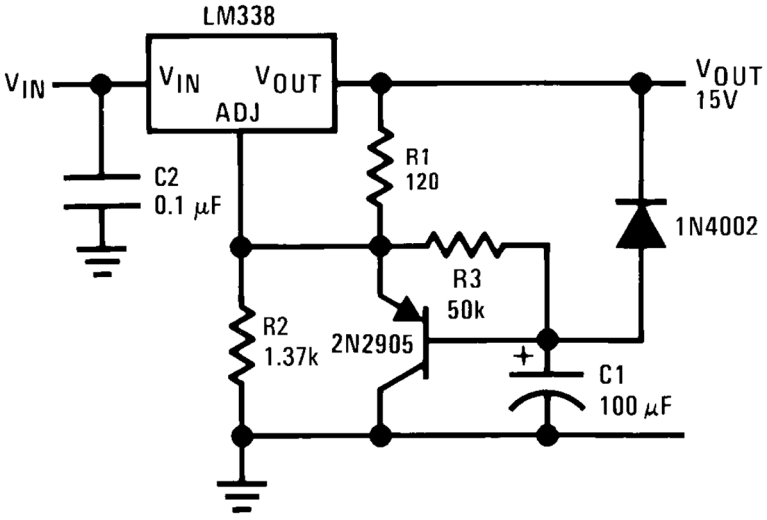

Figure 7-12. Slow Turnon 15-V Regulator

Copyright © 2025 Texas Instruments Incorporated

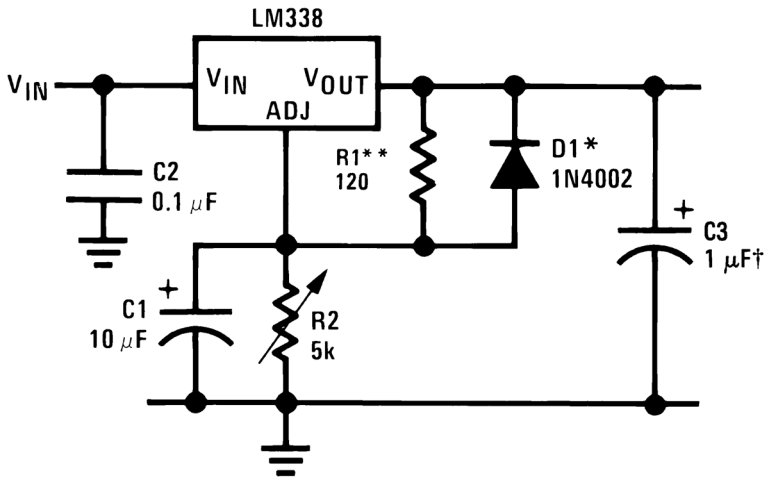

†Solid tantalum *Discharges C1 if output is shorted to ground **R1 = 240 Ω for LM138

Figure 7-13. Adjustable Regulator With Improved Ripple Rejection

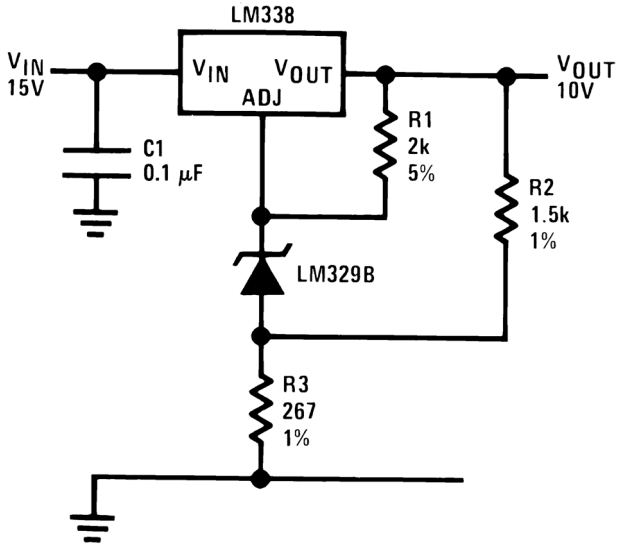

Figure 7-14. High Stability 10-V Regulator

Copyright © 2025 Texas Instruments Incorporated

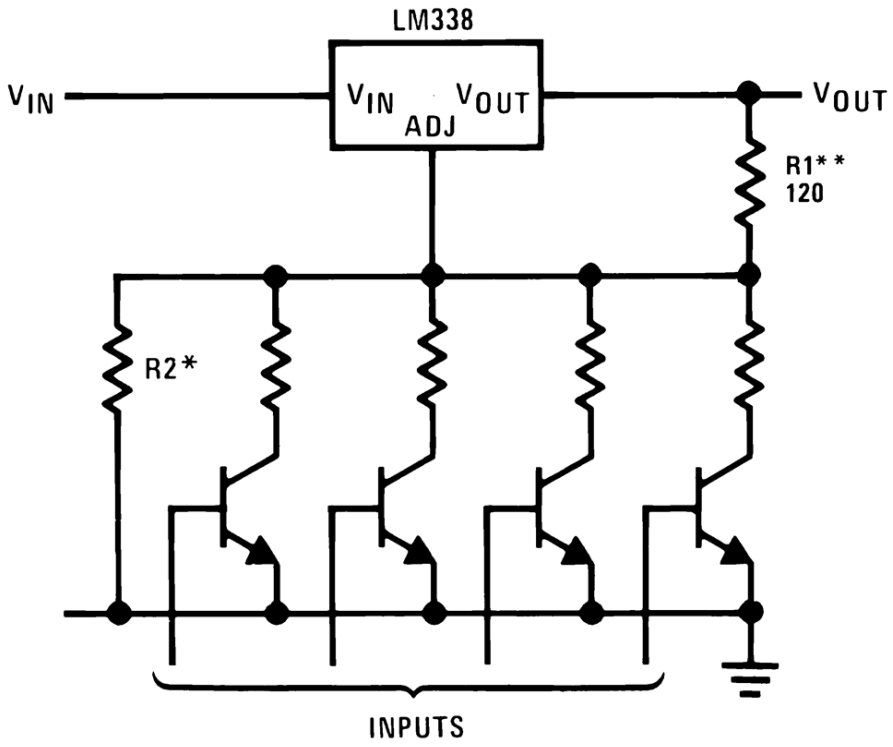

*Sets maximum V_{OUT} **R1 = 240 Ω for LM138

Figure 7-15. Digitally Selected Outputs

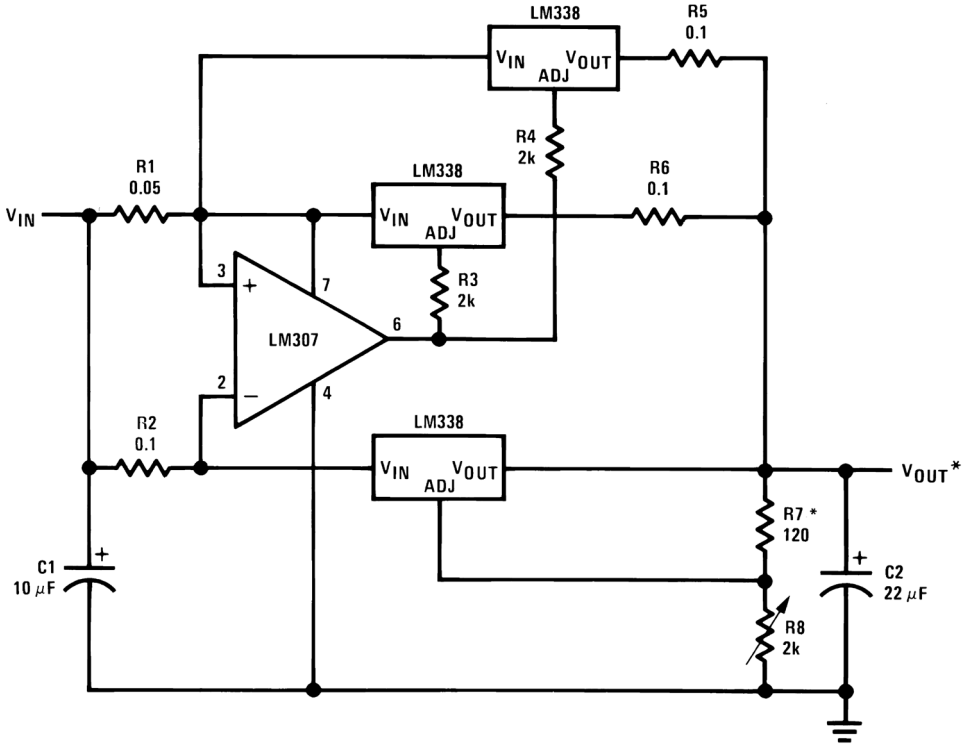

* Minimum load—100 mA

Figure 7-16. 15-A Regulator

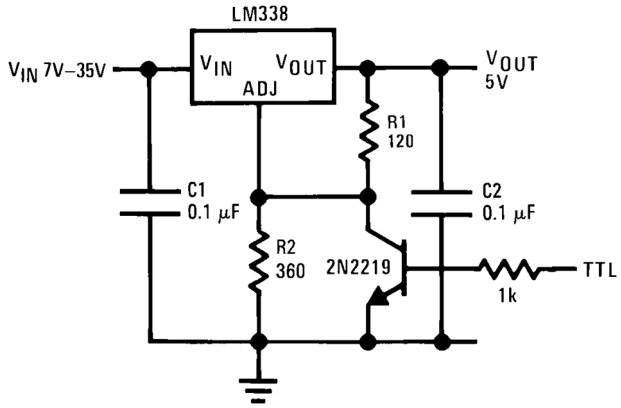

** Minimum output ≈ 1.2 V

Figure 7-17. 5-V Logic Regulator With Electronic Shutdown**

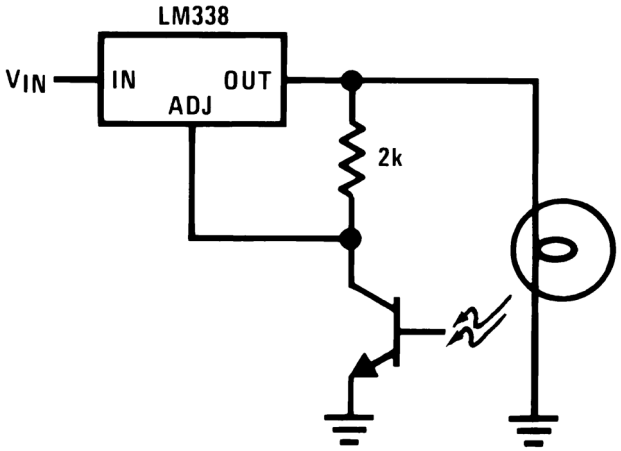

Figure 7-18. Light Controller

Copyright © 2025 Texas Instruments Incorporated

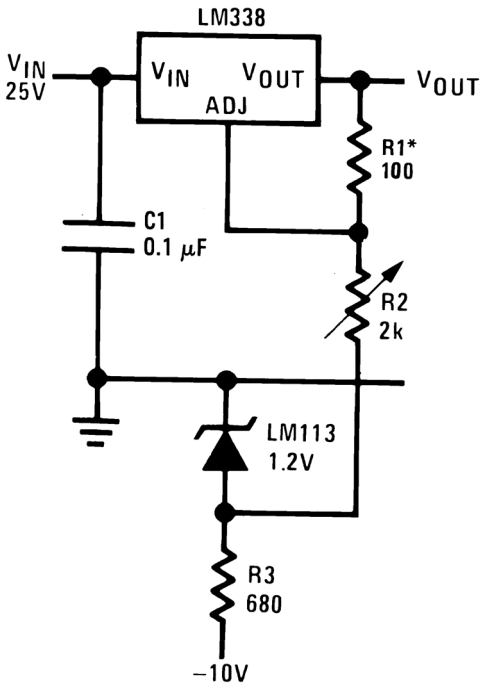

* R1 = 240 Ω, R2 = 5k for LM138 Full output current not available at high input-output voltages

Figure 7-19. 0 to 22-V Regulator

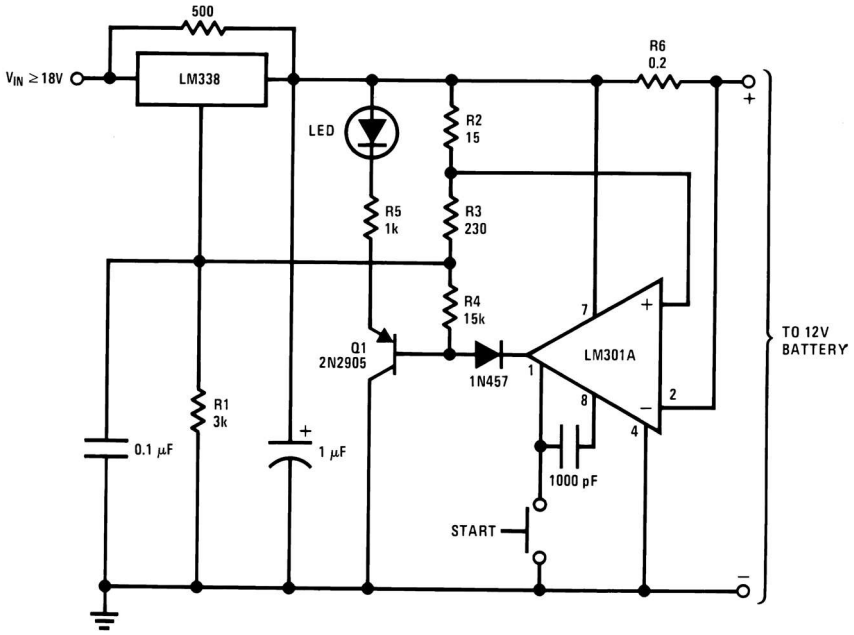

Figure 7-20. 12-V Battery Charger

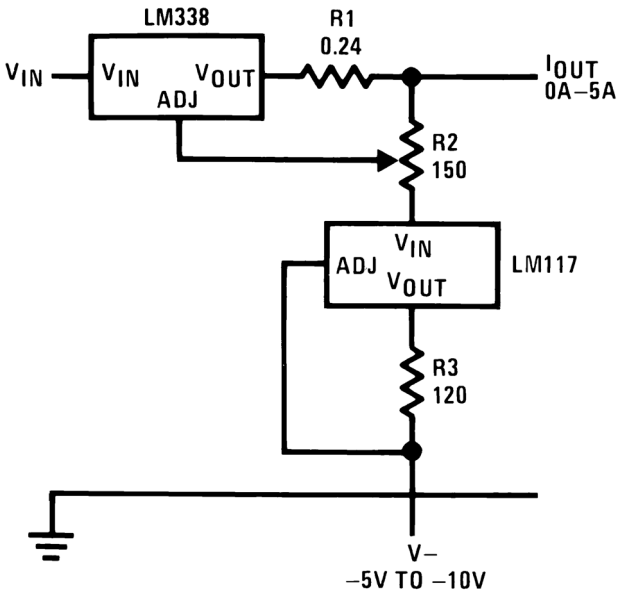

Figure 7-21. Adjustable Current Regulator

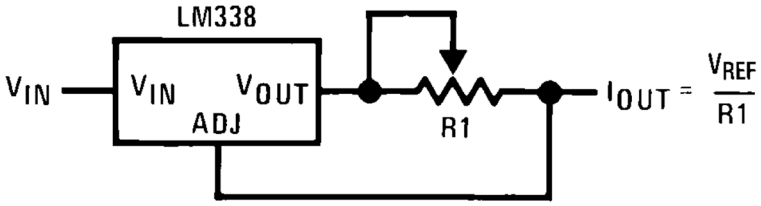

Figure 7-22. Precision Current Limiter

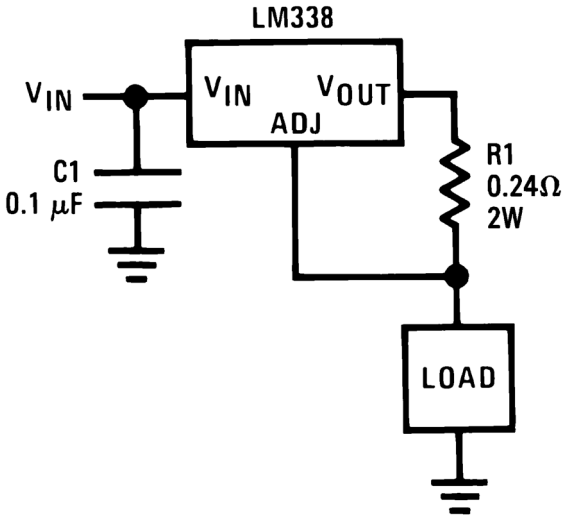

Figure 7-23. 5-A Current Regulator

Copyright © 2025 Texas Instruments Incorporated

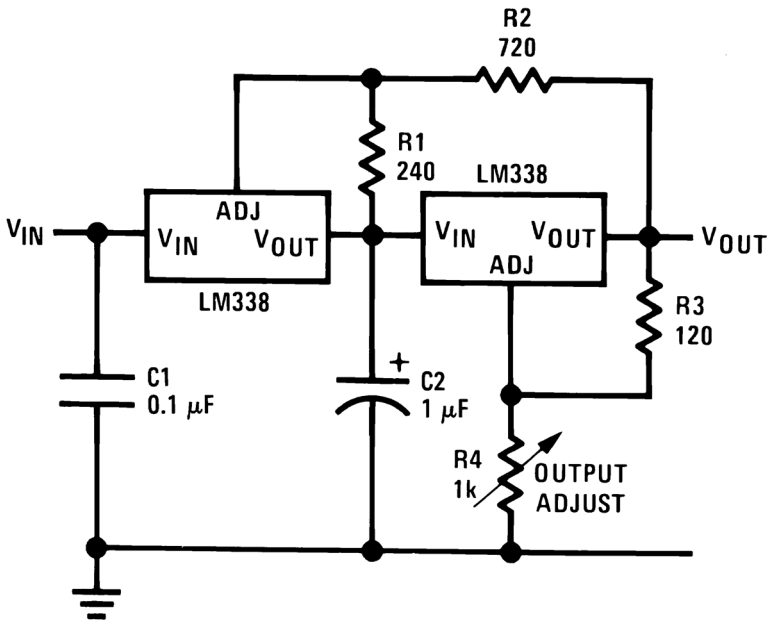

Figure 7-24. Tracking Preregulator

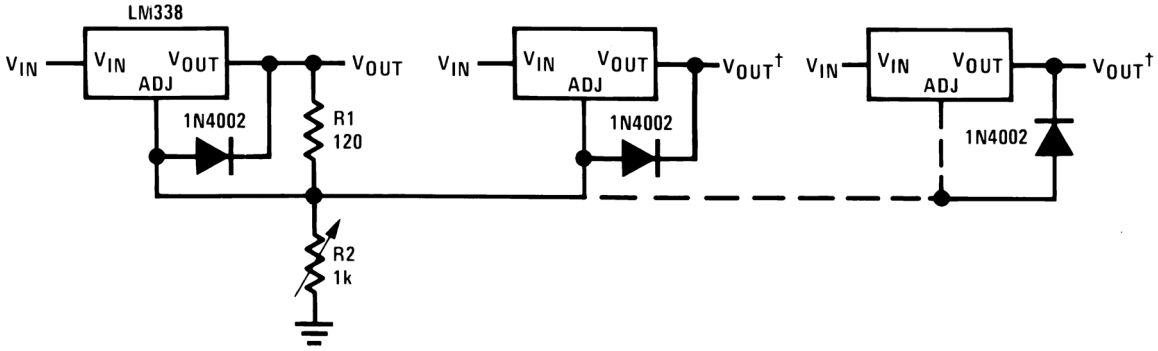

† Minimum load—10 mA * All outputs within ±100 mV

Figure 7-25. Adjusting Multiple On-Card Regulators With Single Control*

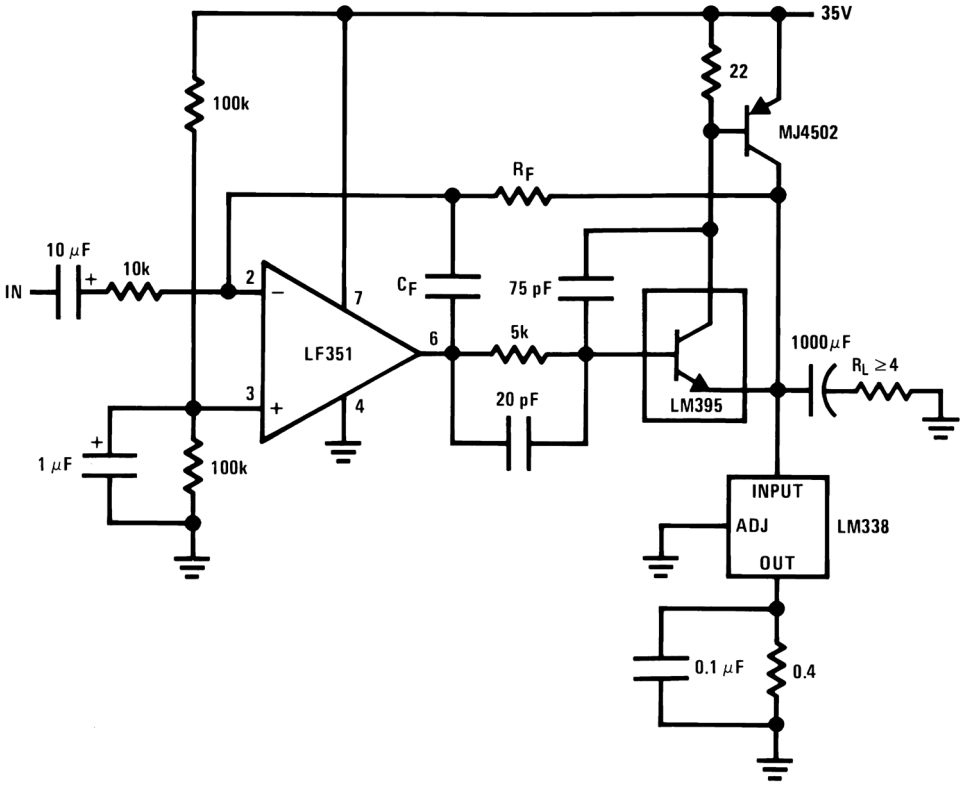

A_V = 1, R_F = 10k, C_F = 100 pF A_V = 10, R_F = 100k, C_F = 10 pF Bandwidth ≥ 100 kHz Distortion ≤ 0.1%

Figure 7-26. Power Amplifier

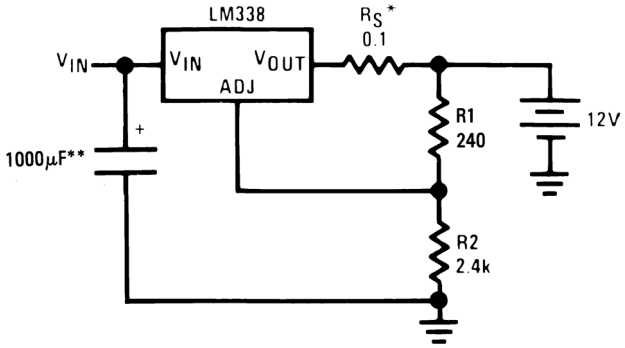

*R_S—sets output impedance of charger $Z_{OUT} = R_S \left(1 + \frac{R2}{R1}\right)$

Use of R_S allows low charging rates with fully charged battery. **The 1000 μF is recommended to filter out input transients

Copyright © 2025 Texas Instruments Incorporated

*R_S—sets output impedance of charger $Z_{OUT} = R_S \left(1 + \frac{R2}{R1}\right)$

Use of R_S allows low charging rates with fully charged battery. **The 1000 µF is recommended to filter out input transients

Figure 7-27. Simple 12-V Battery Charger

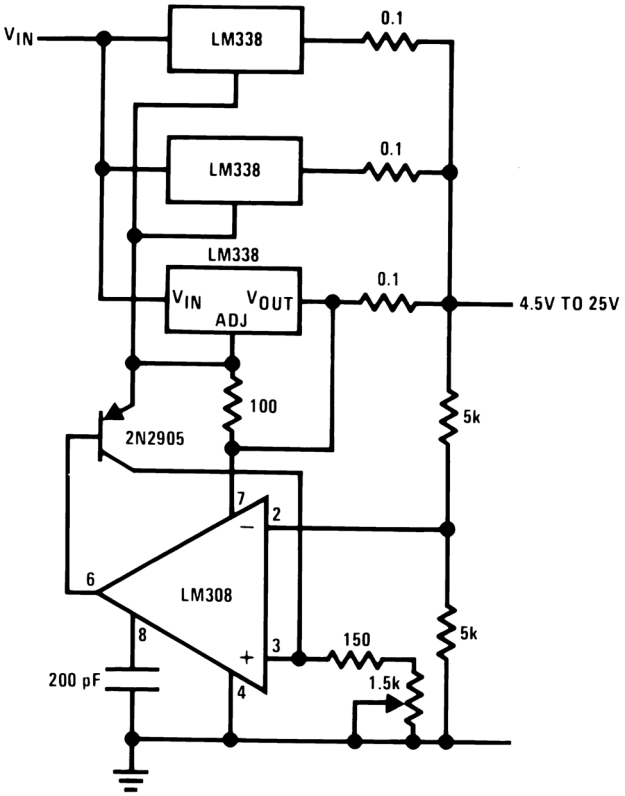

Figure 7-28. Adjustable 15-A Regulator

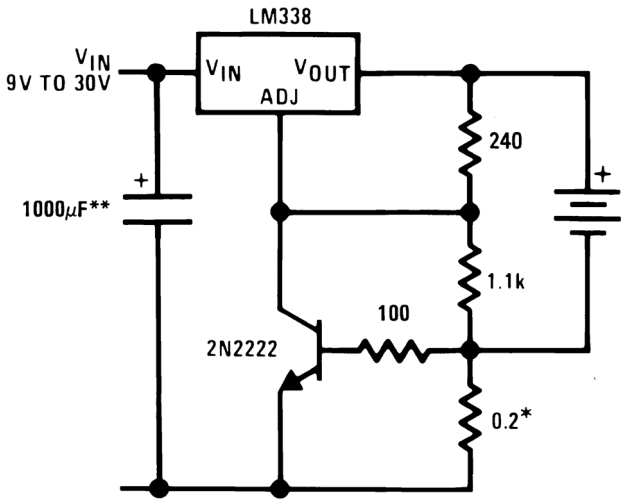

* Set max charge current to 3 A ** The 1000 μF is recommended to filter out input transients.

Figure 7-29. Current Limited 6-V Charger

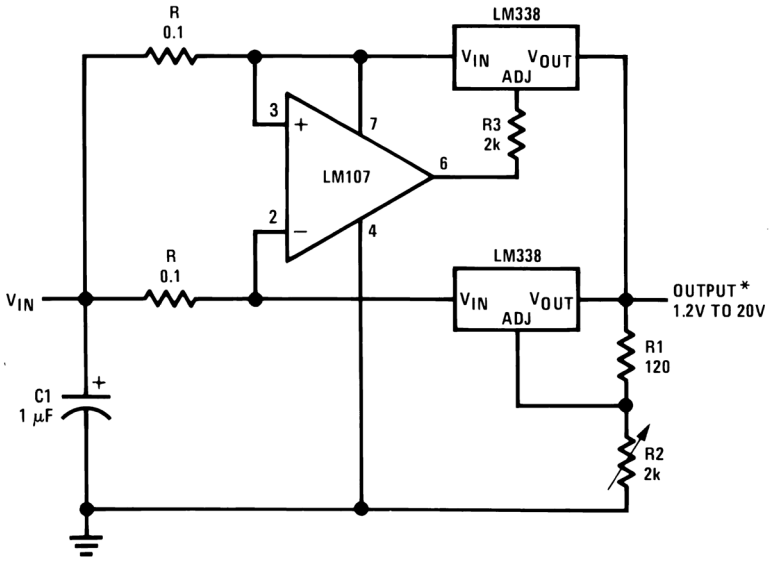

* Minimum load—100 mA

Figure 7-30. 10-A Regulator

7.4 Power Supply Recommendations

The input supply to LM138 and LM338 must be kept at a voltage level such that its maximum input to output differential voltage rating is not exceeded. The minimum dropout voltage must also be met with extra headroom when possible to keep the LM138 and LM338 in regulation. TI recommends a capacitor be placed at the input to bypass noise.

7.5 Layout

7.5.1 Layout Guidelines

Some layout guidelines must be followed to ensure proper regulation of the output voltage with minimum noise. Traces carrying the load current must be wide to reduce the amount of parasitic trace inductance and the feedback loop from V_{OUT} to ADJ must be kept as short as possible. To improve PSRR, a bypass capacitor can be placed at the ADJ pin and must be placed as close as possible to the IC. In cases when V_{IN} shorts to ground,

Copyright © 2025 Texas Instruments Incorporated

an external diode must be placed from V_{OUT} to V_{IN} to divert the surge current from the output capacitor and protect the IC. Similarly, in cases when a large bypass capacitor is placed at the ADJ pin and VOUT shorts to ground, an external diode must be placed from ADJ to V_{OUT} to provide a path for the bypass capacitor to discharge. These diodes must be placed close to the corresponding IC pins to increase their effectiveness.

7.5.2 Layout Example

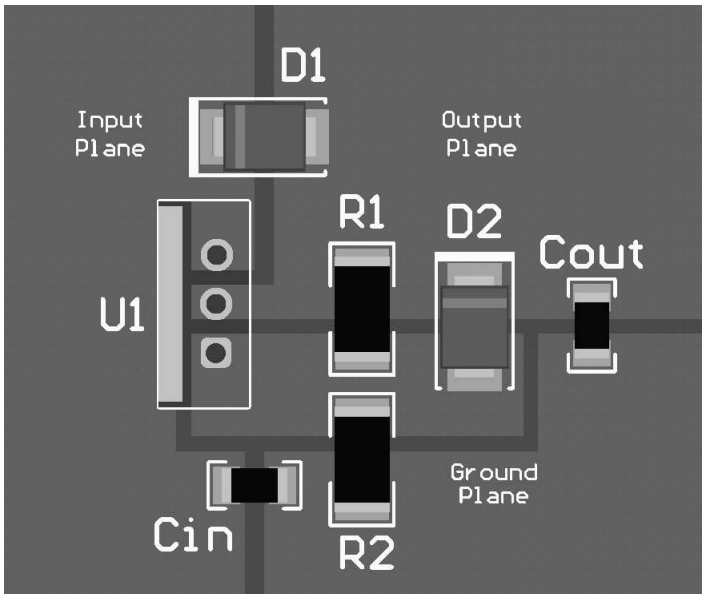

Figure 7-31. LMx38 Layout

8 Device and Documentation Support

8.1 Receiving Notification of Documentation Updates

To receive notification of documentation updates, navigate to the device product folder on ti.com. Click on *Notifications* to register and receive a weekly digest of any product information that has changed. For change details, review the revision history included in any revised document.

8.2 Support Resources

TI E2E™ support forums are an engineer's go-to source for fast, verified answers and design help — straight from the experts. Search existing answers or ask your own question to get the quick design help you need.

Linked content is provided "AS IS" by the respective contributors. They do not constitute TI specifications and do not necessarily reflect TI's views; see TI's Terms of Use.

8.3 Trademarks

TI E2E™ is a trademark of Texas Instruments.
All trademarks are the property of their respective owners.

8.4 Electrostatic Discharge Caution



This integrated circuit can be damaged by ESD. Texas Instruments recommends that all integrated circuits be handled with appropriate precautions. Failure to observe proper handling and installation procedures can cause damage.

ESD damage can range from subtle performance degradation to complete device failure. Precision integrated circuits may be more susceptible to damage because very small parametric changes could cause the device not to meet its published specifications.

8.5 Glossary

TI Glossary	This glossary lists and explains terms, acronyms, and definitions.

9 Revision History

NOTE: Page numbers for previous revisions may differ from page numbers in the current version.

Changes from Revision C (December 2016) to Revision D (May 2025)	Page
• Deleted *Available Packages* figure	1
• Changed denominator to R1 in Equation 1	13

Changes from Revision B (April 2013) to Revision C (December 2016)	Page
• Added *Device Information* table, *Pin Configuration and Functions* section, *Specifications* section, *Recommended Operating Conditions* table, *Thermal Information* table, *Detailed Description* section, *Application and Implementation* section, *Power Supply Recommendations* section, *Layout* section, *Device and Documentation Support* section, and *Mechanical, Packaging, and Orderable Information* section	1
• Deleted RETS138K military specification reference from *Absolute Maximum Ratings* table	5
• Changed Junction to Ambient, $R_{\theta JA}$, value in *Thermal Information* table From: 50°C/W To: 22.9°C/W (NDE)	5
• Changed Junction to Case, $R_{\theta JC(top)}$, value in *Thermal Information* table From: 4°C/W To: 15.7°C/W (NDE)	5

10 Mechanical, Packaging, and Orderable Information

The following pages include mechanical, packaging, and orderable information. This information is the most current data available for the designated devices. This data is subject to change without notice and revision of this document. For browser-based versions of this data sheet, refer to the left-hand navigation.

Copyright © 2025 Texas Instruments Incorporated

PACKAGING INFORMATION

Orderable part number	Status (1)	Material type (2)	Package | Pins	Package qty | Carrier	RoHS (3)	Lead finish/ Ball material (4)	MSL rating/ Peak reflow (5)	Op temp (°C)	Part marking (6)
LM138K STEEL	Active	Production	TO-3 (NDS) | 2	50 | TRAY NON-STD	No	Call TI	Call TI	-55 to 125	LM138K STEELP+
LM138K STEEL/NOPB	Active	Production	TO-3 (NDS) | 2	50 | TRAY NON-STD	Yes	Call TI	Level-1-NA-UNLIM	-55 to 125	LM138K STEELP+
LM338T/NOPB	Active	Production	TO-220 (NDE) | 3	45 | TUBE	Yes	SN	Level-1-NA-UNLIM	0 to 125	LM338T P+
LM338T/NOPB.B	Active	Production	TO-220 (NDE) | 3	45 | TUBE	Yes	SN	Level-1-NA-UNLIM	0 to 125	LM338T P+

(1) **Status:** For more details on status, see our product life cycle.

(2) **Material type:** When designated, preproduction parts are prototypes/experimental devices, and are not yet approved or released for full production. Testing and final process, including without limitation quality assurance, reliability performance testing, and/or process qualification, may not yet be complete, and this item is subject to further changes or possible discontinuation. If available for ordering, purchases will be subject to an additional waiver at checkout, and are intended for early internal evaluation purposes only. These items are sold without warranties of any kind.

(3) **RoHS values:** Yes, No, RoHS Exempt. See the TI RoHS Statement for additional information and value definition.

(4) **Lead finish/Ball material:** Parts may have multiple material finish options. Finish options are separated by a vertical ruled line. Lead finish/Ball material values may wrap to two lines if the finish value exceeds the maximum column width.

(5) **MSL rating/Peak reflow:** The moisture sensitivity level ratings and peak solder (reflow) temperatures. In the event that a part has multiple moisture sensitivity ratings, only the lowest level per JEDEC standards is shown. Refer to the shipping label for the actual reflow temperature that will be used to mount the part to the printed circuit board.

(6) **Part marking:** There may be an additional marking, which relates to the logo, the lot trace code information, or the environmental category of the part.

Multiple part markings will be inside parentheses. Only one part marking contained in parentheses and separated by a "~" will appear on a part. If a line is indented then it is a continuation of the previous line and the two combined represent the entire part marking for that device.

Important Information and Disclaimer: The information provided on this page represents TI's knowledge and belief as of the date that it is provided. TI bases its knowledge and belief on information provided by third parties, and makes no representation or warranty as to the accuracy of such information. Efforts are underway to better integrate information from third parties. TI has taken and continues to take reasonable steps to provide representative and accurate information but may not have conducted destructive testing or chemical analysis on incoming materials and chemicals. TI and TI suppliers consider certain information to be proprietary, and thus CAS numbers and other limited information may not be available for release.

In no event shall TI's liability arising out of such information exceed the total purchase price of the TI part(s) at issue in this document sold by TI to Customer on an annual basis.

TUBE

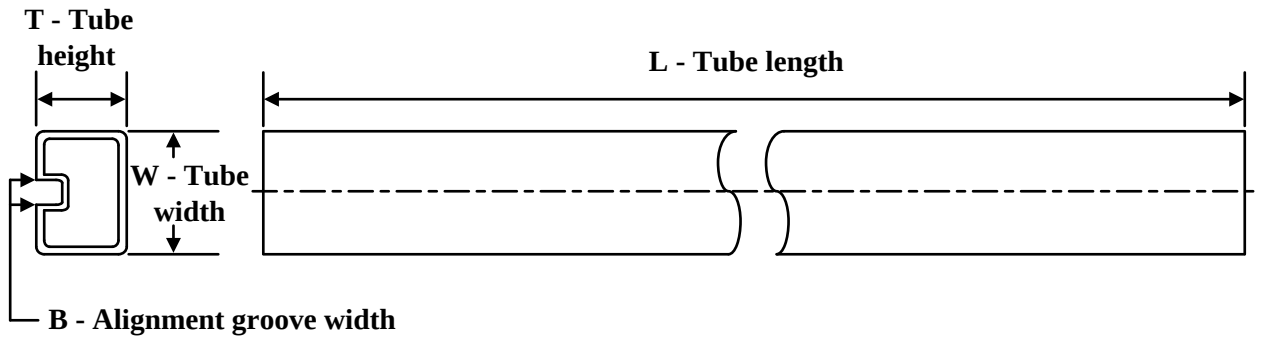

*All dimensions are nominal

Device	Package Name	Package Type	Pins	SPQ	L (mm)	W (mm)	T (µm)	B (mm)
LM338T/NOPB	NDE	TO-220	3	45	502	33	6985	4.06
LM338T/NOPB.B	NDE	TO-220	3	45	502	33	6985	4.06

NDE0003B

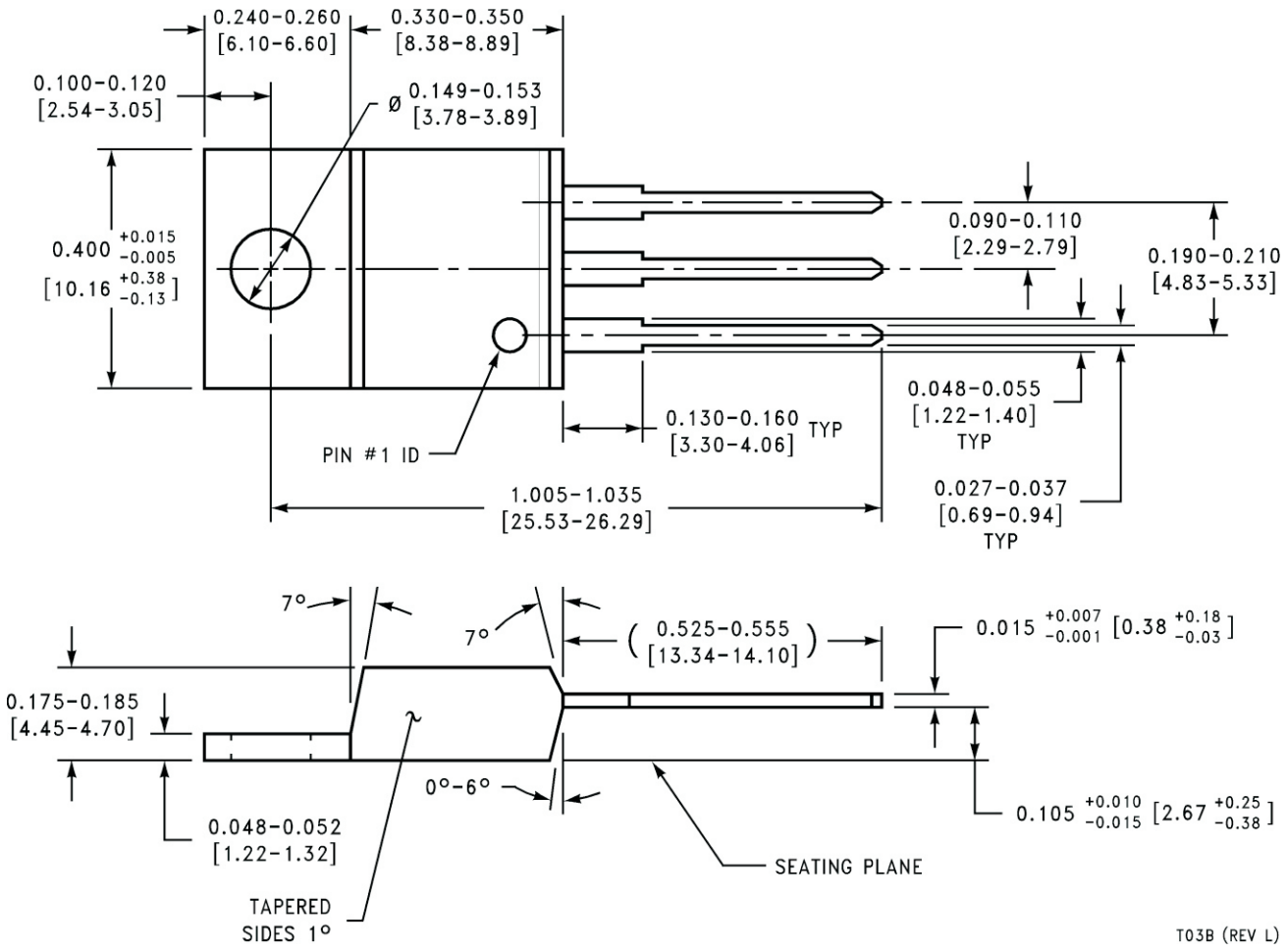
0.240-0.260
[6.10-6.60]
0.330-0.350
[8.38-8.89]
0.100-0.120
[2.54-3.05]
Ø 0.149-0.153
[3.78-3.89]
0.400 +0.015 -0.005
[10.16 +0.38 -0.13]
0.090-0.110
[2.29-2.79]
0.190-0.210
[4.83-5.33]
PIN #1 ID
0.130-0.160 TYP
[3.30-4.06]
0.048-0.055
[1.22-1.40]
TYP
1.005-1.035
[25.53-26.29]
0.027-0.037
[0.69-0.94]
TYP
7°
7°
(0.525-0.555
[13.34-14.10])
0.015 +0.007 -0.001 [0.38 +0.18 -0.03]
0.175-0.185
[4.45-4.70]
0°-6°
0.105 +0.010 -0.015 [2.67 +0.25 -0.38]
0.048-0.052
[1.22-1.32]
SEATING PLANE
TAPERED
SIDES 1°
T03B (REV L)

PACKAGE OUTLINE

NDS0002A



TO-CAN - 8.94 mm max height

TRANSISTOR OUTLINE

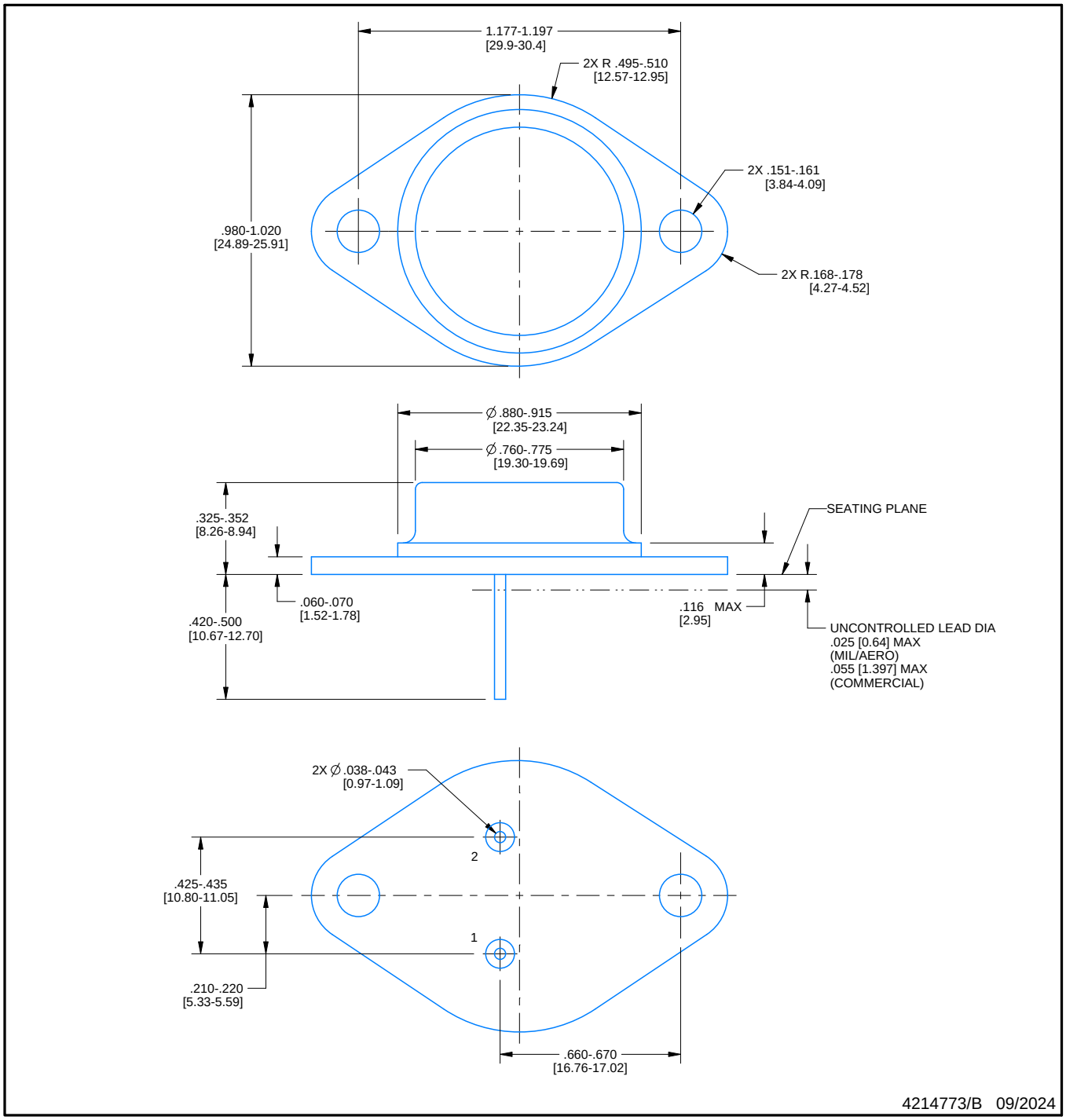

4214773/B 09/2024

NOTES:

1. Linear dimensions are in inches [millimeters]. Dimensions in parenthesis are for reference only. Controlling dimensions are in inches. Dimensioning and tolerancing per ASME Y14.5M.
2. This drawing is subject to change without notice.

IMPORTANT NOTICE AND DISCLAIMER

TI PROVIDES TECHNICAL AND RELIABILITY DATA (INCLUDING DATASHEETS), DESIGN RESOURCES (INCLUDING REFERENCE DESIGNS), APPLICATION OR OTHER DESIGN ADVICE, WEB TOOLS, SAFETY INFORMATION, AND OTHER RESOURCES “AS IS” AND WITH ALL FAULTS, AND DISCLAIMS ALL WARRANTIES, EXPRESS AND IMPLIED, INCLUDING WITHOUT LIMITATION ANY IMPLIED WARRANTIES OF MERCHANTABILITY, FITNESS FOR A PARTICULAR PURPOSE OR NON-INFRINGEMENT OF THIRD PARTY INTELLECTUAL PROPERTY RIGHTS.

These resources are intended for skilled developers designing with TI products. You are solely responsible for (1) selecting the appropriate TI products for your application, (2) designing, validating and testing your application, and (3) ensuring your application meets applicable standards, and any other safety, security, regulatory or other requirements.

These resources are subject to change without notice. TI grants you permission to use these resources only for development of an application that uses the TI products described in the resource. Other reproduction and display of these resources is prohibited. No license is granted to any other TI intellectual property right or to any third party intellectual property right. TI disclaims responsibility for, and you fully indemnify TI and its representatives against any claims, damages, costs, losses, and liabilities arising out of your use of these resources.

TI’s products are provided subject to TI’s Terms of Sale, TI’s General Quality Guidelines, or other applicable terms available either on ti.com or provided in conjunction with such TI products. TI’s provision of these resources does not expand or otherwise alter TI’s applicable warranties or warranty disclaimers for TI products. Unless TI explicitly designates a product as custom or customer-specified, TI products are standard, catalog, general purpose devices.

TI objects to and rejects any additional or different terms you may propose.

Copyright © 2026, Texas Instruments Incorporated

Last updated 10/2025