SQUARE BODY SEMICONDUCTOR FUSES

700/1300 VAC • Very Fast-Acting • 63-2500 A



Ordering Information

LA 070 URD 31 LI 350

Littelfuse

Voltage
070=700 V
130=1300 V

Class

Size

700 V	1300 V
30	70
31	71
32	72
33	73

Mounting Type

Straight-blade	KI	LI
Straight-blade	LI	LLI
Flat-type, one hole	TTI	TTI

Amp Rating

Description

Littelfuse North American style square body semiconductor fuses provide maximum flexibility in equipment design and ultimate protection for today's power conversion equipment. Available in different body sizes and multiple mounting styles, the broad range of ampere ratings allows great flexibility in equipment design.

Engineered to provide state-of-the-art protection for SCRs, diodes, thyristors, GTOs, and IGBT devices, Littelfuse square body fuses have pure die-cut elements embedded in solidified sand to control arcing and lower I^2t. All fuses are also equipped with a blown fuse trip indicator.

Features

- Choice of mounting styles provides a wide choice for equipment design.
- Broad range of ampere ratings in a given body size for design flexibility.
- Very low I^2t minimizes damage to protected components.
- Superior cycling ability for long, reliable life on high cyclic loading.
- Extremely fast-acting and current-limiting for improved protection to equipment.

Applications

Protection of rectifiers, inverters, DC drives, UPS systems, reduced voltage motor starters, and other equipment in globally accepted applications.

Specifications

Voltage Rating	AC:	700 V (LA070) 1300 V (LA130)
	DC:	Contact factory
Interrupting Rating	AC:	200 kA (LA070) 100 kA (LA130)
	DC:	Contact factory
Ampere Range	63 – 2500 A	
Approvals	UL Recognized Component	

Web Resources

For additional information, visit:
www.littelfuse.com/la070

© 2013 Littelfuse POWR-GARD® Products

SQUARE BODY SEMICONDUCTOR FUSES

700/1300 VAC • Very Fast-Acting • 63-2500 A

BODY SIZE	AMPERE RATING	RATED VOLTAGE	MELTING I^2T ($A^2S \times 10^3$)	TOTAL I^2T @ RATED VOLTAGE ($A^2S \times 10^3$)	*WATTS LOSS @ RATED CURRENT (W)	LONG BLADE CATALOG NUMBER TYPE LI	SHORT BLADE CATALOG NUMBER TYPE KI	TAPPED TERMINAL CATALOG NUMBER TYPE TTI
30	63	700	0.2	1.2	14	LA070URD30LI0063	LA070URD30KI0063	LA070URD30TTI0063
	80	700	0.33	1.9	19	LA070URD30LI0080	LA070URD30KI0080	LA070URD30TTI0080
	100	700	0.47	2.7	26	LA070URD30LI0100	LA070URD30KI0100	LA070URD30TTI0100
	125	700	0.85	4.9	30	LA070URD30LI0125	LA070URD30KI0125	LA070URD30TTI0125
	160	700	1.6	9.2	37	–	LA070URD30KI0160	LA070URD30TTI0160
	200	700	3	16.7	42/43	LA070URD30LI0200	LA070URD30KI0200	LA070URD30TTI0200
	250	700	5.8	32.4	48/50	LA070URD30LI0250	LA070URD30KI0250	LA070URD30TTI0250
	315	700	12	67	53/55	LA070URD30LI0315	LA070URD30KI0315	LA070URD30TTI0315
	350	700	15.5	86	57/60	LA070URD30LI0350	LA070URD30KI0350	LA070URD30TTI0350
	400	700	23	130	60/65	LA070URD30LI0400	LA070URD30KI0400	LA070URD30TTI0400
	450	700	26	165	80/88	LA070URD30LI0450	LA070URD30KI0450	LA070URD30TTI0450
	500	700	41	264	80/88	LA070URD30LI0500	LA070URD30KI0500	LA070URD30TTI0500
	550	700	52	330	80/90	LA070URD30LI0550	LA070URD30KI0550	LA070URD30TTI0550
31	200	700	2.5	14.6	45	LA070URD31LI0200	LA070URD31KI0200	LA070URD31TTI0200
	250	700	4.7	27	52	LA070URD31LI0250	LA070URD31KI0250	LA070URD31TTI0250
	315	700	7.5	43	65	LA070URD31LI0315	LA070URD31KI0315	LA070URD31TTI0315
	350	700	10.5	59	67	LA070URD31LI0350	LA070URD31KI0350	LA070URD31TTI0350
	400	700	19	110	68	LA070URD31LI0400	LA070URD31KI0400	LA070URD31TTI0400
	450	700	26.5	150	70	LA070URD31LI0450	LA070URD31KI0450	LA070URD31TTI0450
	500	700	37	210	70/72	LA070URD31LI0500	LA070URD31KI0500	LA070URD31TTI0500
	550	700	52	300	70/75	LA070URD31LI0550	LA070URD31KI0550	LA070URD31TTI0550
	630	700	75	421	75/85	LA070URD31LI0630	LA070URD31KI0630	LA070URD31TTI0630
	700	700	95	530	85/95	LA070URD31LI0700	LA070URD31KI0700	LA070URD31TTI0700
	800	700	140	880	105/120	LA070URD31LI0800	LA070URD31KI0800	LA070URD31TTI0800
32	400	700	15	86	72/75	LA070URD32LI0400	LA070URD32KI0400	LA070URD32TTI0400
	450	700	22	124	77/80	LA070URD32LI0450	LA070URD32KI0450	LA070URD32TTI0450
	500	700	28	157	85/90	LA070URD32LI0500	LA070URD32KI0500	LA070URD32TTI0500
	550	700	37	211	90/95	LA070URD32LI0550	LA070URD32KI0550	LA070URD32TTI0550
	630	700	54	302	95/105	LA070URD32LI0630	LA070URD32KI0630	LA070URD32TTI0630
	700	700	76	432	100/110	LA070URD32LI0700	LA070URD32KI0700	LA070URD32TTI0700
	800	700	115	648	110/120	LA070URD32LI0800	LA070URD32KI0800	LA070URD32TTI0800
	900	700	170	972	110/125	LA070URD32LI0900	LA070URD32KI0900	LA070URD32TTI0900
	1000	700	240	1350	115/135	LA070URD32LI1000	LA070URD32KI1000	LA070URD32TTI1000
	1100	650	270	1620	140/165	LA065URD32LI1100	–	LA065URD32TTI1100
	1250	600	410	2100	150/180	LA060URD32LI1250	–	LA060URD32TTI1250
	1400	550	555	2600	160/190	LA055URD32LI1400	–	LA055URD32TTI1400
	1600	550	870	4000	165/195	LA055URD32LI1600	–	LA055URD32TTI1600
	1800	500	1050	4400	195/330	LA050URD32LI1800	–	LA050URD32TTI1800
33	500	700	19	108	105	LA070URD33LI0500	LA070URD33KI0500	LA070URD33TTI0500
	550	700	27	151	105/110	LA070URD33LI0550	LA070URD33KI0550	LA070URD33TTI0550
	630	700	40	227	110/120	LA070URD33LI0630	LA070URD33KI0630	LA070URD33TTI0630
	700	700	55	324	115/125	LA070URD33LI0700	LA070URD33KI0700	LA070URD33TTI0700
	800	700	95	529	120/130	LA070URD33LI0800	LA070URD33KI0800	LA070URD33TTI0800
	900	700	135	760	120/135	LA070URD33LI0900	LA070URD33KI0900	LA070URD33TTI0900
	1000	700	170	970	135/155	LA070URD33LI1000	LA070URD33KI1000	LA070URD33TTI1000
	1100	700	240	1360	135/160	LA070URD33LI1100	LA070URD33KI1100	LA070URD33TTI1100
	1250	700	350	2000	150/180	LA070URD33LI1250	LA070URD33KI1250	LA070URD33TTI1250
	1400	700	480	2700	160/200	LA070URD33LI1400	LA070URD33KI1400	LA070URD33TTI1400
	1600	650	555	3250	210/240	LA065URD33LI1600	–	LA065URD33TTI1600
	1800	650	720	4330	225/260	LA065URD33LI1800	–	LA065URD33TTI1800
	2000	600	950	5000	250/290	LA060URD33LI2000	–	LA060URD33TTI2000
	2250	550	1250	5900	280/330	LA055URD33LI2250	–	LA055URD33TTI2250
	2500	500	1870	7600	280/330	LA050URD33LI2500	–	LA050URD33TTI2500

*Watts loss data is published for both blade and tapped style mounting configurations.
When two watts loss values are shown, this represents tapped/blade values respectively.
Contact Littelfuse for characteristic curves.

© 2013 Littelfuse POWR-GARD® Products

SQUARE BODY SEMICONDUCTOR FUSES

700/1300 VAC • Very Fast-Acting • 63-2500 A

TYPES KI AND LI

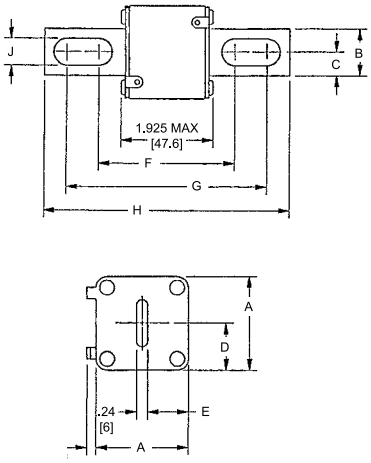

North American Straight Blade, Type KI

Dimensions

Dimensions for reference only.

CATALOG NUMBER	DIMENSIONS INCHES (mm)								
	A	B	C	D	E	F	G	H	J
LA070URD30KI (63-550)	1.57 (40)	0.98 (25)	0.49 (12.5)	0.83 (21)	0.71 (18)	2.68 (68)	4.21 (107)	5.08 (129)	0.41 (10.5)
LA070URD31KI (200-800)	2.01 (51)	0.98 (25)	0.49 (12.5)	1.0 (25.5)	0.89 (22.5)	2.66 (67.6)	4.22 (107.1)	5.07 (128.8)	0.56 (14.3)
LA070URD32KI (400-1000)	2.36 (60)	1.26 (32)	0.63 (16)	1.18 (30)	1.06 (27)	2.92 (74.2)	4.29 (109)	5.28 (134)	0.57 (14.6)
LA070URD33KI (500-1400)	2.93 (74.5)	1.57 (40)	0.79 (20)	1.46 (37.2)	1.35 (34.2)	2.97 (75.4)	4.24 (107.6)	5.28 (134)	0.63 (15.9)

North American Straight Blade, Type LI

Dimensions

Dimensions for reference only.

CATALOG NUMBER	DIMENSIONS INCHES (mm)								
	A	B	C	D	E	F	G	H	J
LA070URD30LI (63-550)	1.57 (40)	0.98 (25)	0.49 (12.5)	0.83 (21)	0.71 (18)	3.45 (87.6)	4.98 (126.6)	5.85 (148.6)	0.41 (10.5)
LA070URD31LI (200-800)	2.01 (51)	0.98 (25)	0.49 (12.5)	1.0 (25.5)	0.89 (22.5)	3.61 (91.6)	4.82 (122.4)	5.85 (148.6)	0.57 (14.6)
LA070URD32LI (400-1000) LA065URD32LI (1250) LA055URD32LI (1400-1600) LA050URD32LI (1800)	2.36 (60)	1.26 (32)	0.63 (16)	1.18 (30)	1.06 (27)	3.71 (94.2)	5.08 (129)	6.02 (153)	0.57 (14.6)
LA070URD33LI (500-1400) LA065URD33LI (1600-1800) LA060URD33LI (2000) LA055URD33LI (2250) LA050URD33LI (2500)	2.93 (74.5)	1.57 (40)	0.79 (20)	1.46 (37.2)	1.35 (34.2)	3.72 (94.4)	4.98 (126.6)	6.02 (153)	0.63 (15.9)

TYPE TTI

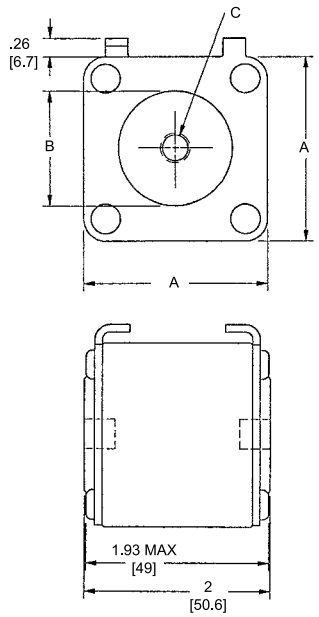

North American Flat Single Hole, Type TTI

Dimensions

Dimensions for reference only.

CATALOG NUMBER	DIMENSIONS INCHES (mm)		
	A	B	C
LA070URD30TTI (100-550)	1.57 (40)	1.00 (25)	5/16-18 x 0.35
LA070URD31TTI (200-800)	2.00 (50.8)	1.19 (30.2)	5/16-18 x 0.35
LA070URD32TTI (400-1000) LA065URD32TTI (1100) LA060URD32TTI (1250) LA055URD32TTI (1400-1600)	2.37 (60.3)	1.50 (38.1)	3/8-16 x 0.35
LA060URD33TTI (1800) LA070URD33TTI (500-1400) LA065URD33TTI (1600) LA060URD33TTI (2000) LA055URD33TTI (2250) LA050URD33TTI (2500)	2.94 (74.5)	1.81 (46)	1/2-18 x 0.35

© 2013 Littelfuse POWR-GARD® Products

SQUARE BODY SEMICONDUCTOR FUSES

700/1300 VAC • Very Fast-Acting • 63-2500 A

BODY SIZE	AMPERE RATING	RATED VOLTAGE	MELTING I^2T ($A^2S \times 10^3$)	TOTAL I^2T @ RATED VOLTAGE ($A^2S \times 10^3$)	*WATTS LOSS @ RATED CURRENT (W)	LONG BLADE CATALOG NUMBER TYPE LI/LLI	TAPPED TERMINAL CATALOG NUMBER TYPE TTI
70	63	1300	0.21	1.8	26	LA130URD70LI0063	LA130URD70TTI0063
	80	1300	0.47	4	27	LA130URD70LI0080	LA130URD70TTI0080
	100	1300	0.83	7.2	30	LA130URD70LI0100	LA130URD70TTI0100
	125	1300	1.3	11	38	LA130URD70LI0125	LA130URD70TTI0125
	160	1300	2.5	22	45	LA130URD70LI0160	LA130URD70TTI0160
	200	1300	4.7	40	54/56	LA130URD70LI0200	LA130URD70TTI0200
	250	1300	9.6	82	58/61	LA130URD70LI0250	LA130URD70TTI0250
	315	1300	20	172	66/72	LA130URD70LI0315	LA130URD70TTI0315
	350	1200	28	205	68/75	LA120URD70LI0350	LA120URD70TTI0350
71	160	1300	2.6	22	46	LA130URD71LLI0160	LA130URDT1TTI0160
	200	1300	4.7	40	54	LA130URD71LLI0200	LA130URD71TTI0200
	250	1300	8.9	76	61	LA130URD71LLI0250	LA130URD71TTI0250
	280	1300	12	102	68/70	LA130URD71IL0280	LA130URD71TTI0280
	315	1300	16	138	73/76	LA130URD71LLI0315	LA130URD71TTI0315
	350	1300	22	190	76/80	LA130URD71LLI0350	LA130URD71TTI0350
	400	1300	38	330	76/80	LA130URD71LLI0400	LA130URD71TTI0400
	450	1300	47	405	87/95	LA130URD71LLI0450	LA130URD71TTI0450
	500	1200	68	500	90/100	LA120URD71LLI0500	LA120URD71TTI0500
	550	1200	84	620	98/112	LA120URD71LLI0550	LA120URD71TTI0550
	630	1100	125	930	105	LA110URD71LLI0630	–
	630	1200	125	930	120	–	LA120URD71TTI0630
72	280	1300	10	90	72	LA130URD72LI0280	LA130URD72TTI0280
	315	1300	15	130	76	LA130URD72LI0315	LA130URD72TTI0315
	350	1300	21	180	77	LA130URD72LI0350	LA130URD72TTI0350
	400	1300	32	285	80	LA130URD72LI0400	LA130URD72TTI0400
	450	1300	44	380	87/89	LA130URD72LI0450	LA130URD72TTI0450
	500	1300	57	500	94/98	LA130URD72LI0500	LA130URD72TTI0500
	550	1300	68	590	110/120	LA130URD72LI0550	LA130URD72TTI0550
	630	1200	105	920	113	LA120URD72LI0630	–
	630	1300	105	920	125	–	LA130URD72TTI0630
	700	1100	145	1040	122	LA110URD72LI0700	–
	700	1200	145	1040	140	–	LA120URD72TTI0700
	800	1100	215	1590	125	LA110URD72LI0800	–
	800	1200	215	1590	146	–	LA120URD72TTI0800
73	315	1300	12	102	84	LA130URD73LI0315	LA130URD73TTI0315
	350	1300	17	150	86	LA130URD73LI0350	LA130URD73TTI0350
	400	1300	25	220	93	LA130URD73LI0400	LA130URD73TTI0400
	450	1300	35	310	99/100	LA130URD73LI0450	LA130URD73TTI0450
	500	1300	44	390	110/112	LA130URD73LI0500	LA130URD73TTI0500
	550	1300	57	500	116/120	LA130URD73LI0550	LA130URD73TTI0550
	630	1300	84	730	125/132	LA130URD73LI0630	LA130URD73TTI0630
	700	1300	110	960	135/146	LA130URD73LI0700	LA130URD73TTI0700
	800	1200	190	1630	136	LA120URD73LI0800	–
	800	1300	190	1630	148	–	LA130URD73TTI0800
	900	1100	250	2160	150	LA110URD73LI0900	–
	900	1000	250	2160	170	–	LA100URD73TTI0900
	1000	1000	370	2430	152/174	LA100URD73LI1000	LA100URD73TTI1000
	1100	1000	445	2580	168/208	LA100URD73LI1100	LA100URD73TTI1100
	1250	1000	585	3480	186/200	LA100URD73LI1250	LA100URD73TTI1250
	1400	900	755	3880	210/228	LA090URD73LI1400	LA090URD73TTI1400
	1600	700	1430	5630	203	LA070URD73LI1600	LA070URD73TTI1600
	1800	660	2040	7600	206	LA065URD73LI1800	LA065URD73TTI1800

*Watts loss data is published for both blade and tapped style mounting configurations.
When two watts loss values are shown, this represents tapped/blade values respectively.
Contact Littelfuse for characteristic curves.

© 2013 Littelfuse POWR-GARD® Products

SQUARE BODY SEMICONDUCTOR FUSES

700/1300 VAC • Very Fast-Acting • 63-2500 A

TYPES LI AND LLI

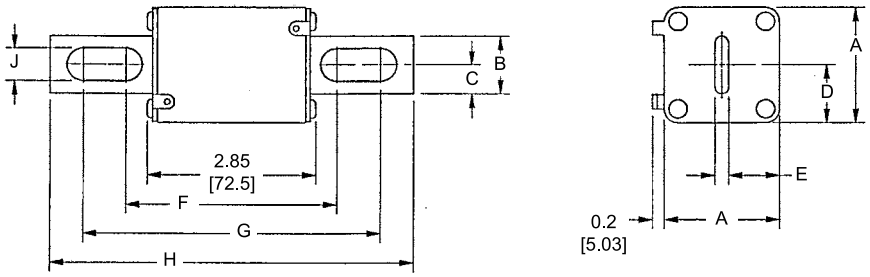

North American Straight Blade, Types LI and LLI

Dimensions

Dimensions for reference only.

CATALOG NUMBER	DIMENSIONS INCHES (mm)								
	A	B	C	D	E	F	G	H	J
LA130URD70LI (63-315) LA120URD70LI (350)	1.57 (40)	0.98 (25)	0.49 (12.5)	0.83 (21)	0.71 (18)	3.60 (91.4)	5.13 (130.4)	6.00 (152.4)	0.41 (10.5)
LA130URD71LLI (160-450) LA120URD71LLI (500-550) LA110URD71LLI (630)	2.01 (51)	0.98 (25)	0.49 (12.5)	1.0 (26.5)	0.89 (22.5)	3.60 (91.4)	5.13 (130.4)	6.00 (152.4)	0.57 (14.6)
LA130URD72LI (280-550) LA120URD72LI (800) LA110URD72LI (700-800)	2.36 (60)	1.26 (32)	0.63 (16)	1.18 (30)	1.06 (27)	3.84 (97.6)	5.2 (132.4)	6.20 (157.4)	0.57 (14.6)
LA130URD73LI (315-700) LA120URD73LI (800) LA110URD73LI (900-1000) LA090URD73LI (1400) LA070URD73LI (1600) LA065URD73LI (1800)	2.93 (74.5)	1.57 (40)	0.79 (20)	1.46 (37.2)	1.35 (34.2)	3.89 (98.8)	5.21 (132.4)	6.20 (157.4)	0.63 (15.9)

TYPE TTI

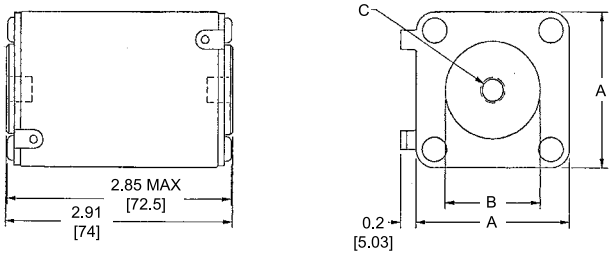

North American Flat Single Hole, Type TTI

Dimensions

CATALOG NUMBER	DIMENSIONS INCHES (mm)		
	A	B	C
LA130URD70TTI (63-315) LA120URD70TTI (350)	1.57 (40)	1.00 (26.4)	5/16-18 x 0.23 DP
LA130URD71TTI (160-450) LA120URD71TTI (550-630)	2.01 (51)	1.19 (30.2)	5/16-18 x 0.36 DP
LA130URD72TTI (280-630) LA120URD72TTI (700-800)	2.36 (60)	1.50 (38.1)	3/8-18 x 0.36 DP
LA130URD73TTI (315-900) LA120URD73TTI (1000) LA110URD73TTI (1250) LA090URD73TTI (1400) LA070URD73TTI (1600) LA065URD73TTI (1800)	2.93 (74.5)	1.81 (46)	½-18 x 0.36 DP

Dimensions for reference only.

© 2013 Littelfuse POWR-GARD® Products