Class CC/CD and Midget Fuse Blocks

600 Volt



Space saving 600 volt, 30 amp molded case fuse blocks with side barriers for isolation. Class CC blocks and Midget blocks are identical except Class CC blocks incorporate a rejection feature to assure proper fusing.

Safety

- Rejection feature — Class CC fuse blocks have a rejection feature which prevents the insertion of fuses with lower interrupting rating or voltage ratings. Class CC fuses are rated 600 volts and have an interrupting rating of 200,000 amperes. Midget fuse voltage ratings vary and their interrupting rating may be as low as 10,000 amperes. *Note that Class CC fuses may be used in Midget fuse blocks, but Midget fuses cannot be used in Class CC blocks.*

Long life

- High-strength materials — Class CC and Midget fuse blocks are molded of high-strength, high-temperature material to minimize block breakage during handling and installation, as well as damage caused by overheating.
- Reduced resistance, less heat — High conductivity, one-piece copper alloy fuse clips have lower resistance than traditional two-piece brass or phosphor bronze fuse clips, which minimizes heat rise and watts loss within the fuse block.

Reduced inventory

- Gangable — Interlocking fuse blocks allow ganging to produce a fuse block with any number of poles.
- Flexible terminal arrangements — 30A Class CC and Midget fuse blocks are available with type C box lug, type SQ screw, or type PQ pressure plate terminals. Type SQ terminals have binding-head screws, while type PQ terminals have captive pressure plates. Both terminal types can accommodate side or top mounted quick-connect terminals. This flexibility allows the accommodation of most needs and reduces part inventory requirements.
- 60A CD fuse blocks are available with type C box lug terminals.
- DIN rail mountable — FBDIN1 adapters permit snap-mounting Littelfuse Class CC and Midget 30 amp fuse blocks directly to standard or low profile 35mm symmetrical "hat" and 32mm asymmetrical DIN rails. Patented DIN rail adapters snap securely to Littelfuse fuse blocks and to DIN rails without tools. They can be readily removed from rails by lifting the disconnect tab.
- L60060C 60A fuse blocks have patented integral DIN rail adapters which allow direct mounting to 35mm "hat" type DIN rails.

Specifications

Voltage Rating: 600 Volts AC/600 Volts DC
Ampere ratings: L60030C: 30 amps
L60030M: 30 amps
L60060C: 60 amps
Dielectric strength: 1200 volts minimum
Clip/terminals: Tin-plated copper alloy
Box lug: Copper
Screw and captive pressure plate: Zinc-plated steel
Base: Thermoplastic. UL 94VO flammability rating.
Approvals: Class CC: UL Listed (File No. E14721)
Midget: UL Recognized (File No. E14721)
Class CC/Midget: CSA Certified (File No. LR7316)

Recommended Fuses

Class CC Blocks:

CCMR | KLDR | KLKR

Midget Blocks:

BLF BLN	BLS FLA	FLM FLQ	FLU KLK	KLKD KLQ	LA60Q-2

Class CD Blocks:

CCMR

Note: L60030M can be used up to 40A.

Class CC/CD and Midget Fuse Blocks

600 Volt

Class CC 30A Fuse Blocks

Amp Rating	No. of Poles	Catalog Number	Connector Type (Add Suffix Shown)	Maximum Wire Size
	1	L60030C-1C		
30	2	L60030C-2C	Box Lug	#6 CU
	3	L60030C-3C		
	1	L60030C-1PQ		
30	2	L60030C-2PQ	Pressure Plate/	#10 CU
	3	L60030C-3PQ	Q. C. Terminal	
	1	L60030C-1SQ		
30	2	L60030C-2SQ	Screw/ Q. C. Terminal	#10 CU
	3	L60030C-3SQ		

Note: Quick Connect Terminals are rated at 20 amperes.

Class CD 60A Fuse Blocks

Amp Rating	No. of Poles	Catalog Number	Connector Type (Add Suffix Shown)	Maximum Wire Size
	1	L60060C-1C		
60	2	L60060C-2C	Box Lug	#6 CU
	3	L60060C-3C		
60	Adder Block	L60060C-AC	Box Lug	#6 CU

Midget Fuse Blocks

Amp Rating	No. of Poles	Catalog Number	Connector Type (Add Suffix Shown)	Maximum Wire Size
	1	L60030M-1C		
30	2	L60030M-2C	Box Lug	#6 CU
	3	L60030M-3C		
	1	L60030M-1PQ		
30	2	L60030M-2PQ	Pressure Plate/	#10 CU
	3	L60030M-3PQ	Q. C. Terminal	
	1	L60030M-1SQ		
30	2	L60030M-2SQ	Screw/ Q. C. Terminal	#10 CU
	3	L60030M-3SQ		

Note: Quick Connect Terminals are rated at 20 amperes.

L60030

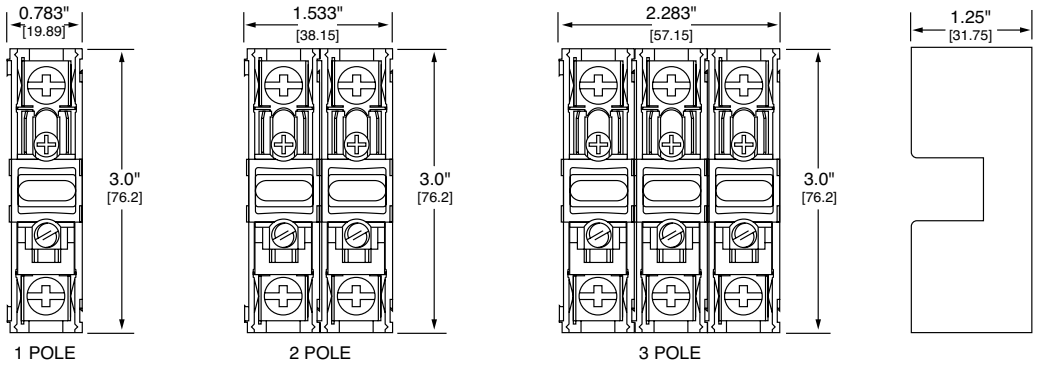

L60060

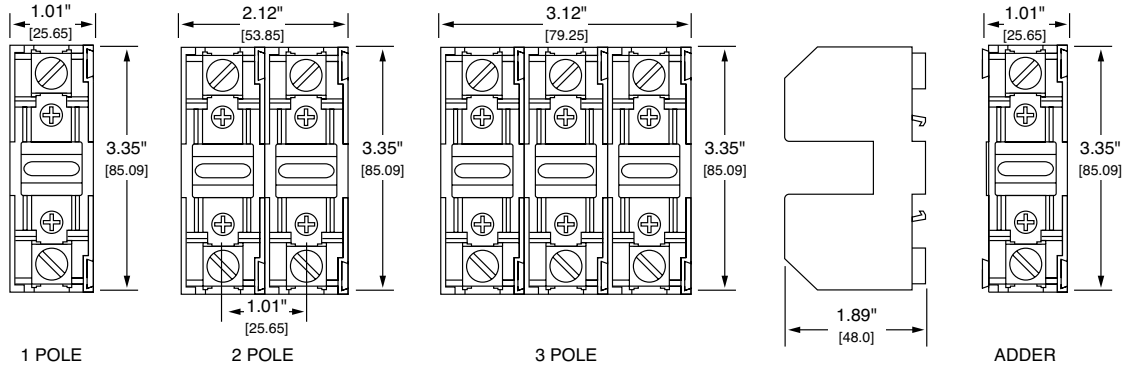

© 2005 Littelfuse • POWR-GARD™ Products Catalog