PART NAME	KEYBOARD ENCLOSURE	PART No.	KB-13200 THRU KB-13202

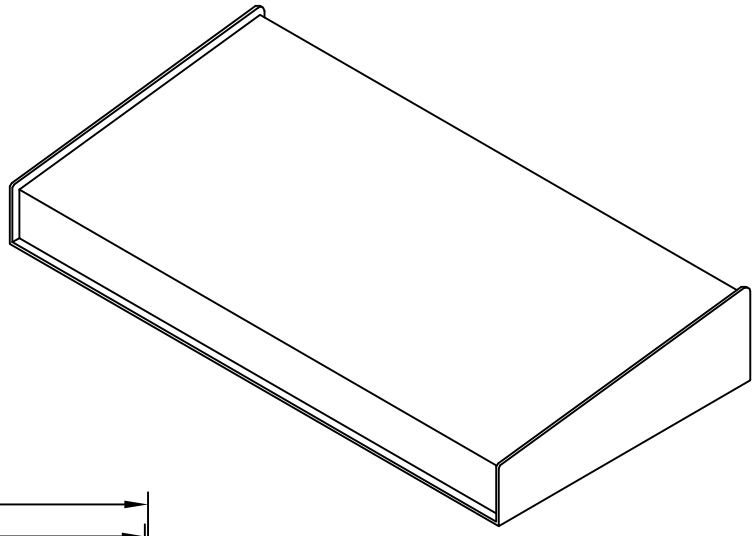

MATERIAL:
- BASE _____ 0.090 THK. ALUMINUM
- COVER _____ 0.050 THK. ALUMINUM

FINISH:
- BASE _____ GRAY TEXTURED
- COVER _____ WHITE (PREPAINTED)
- FEET _____ BLACK

SHIPPED UNASSEMBLED.

SUPPLIED WITH FOUR (4) #6-32 x 0.375 LONG SCREWS AND FOUR (4) SELF-ADHESIVE FEET.

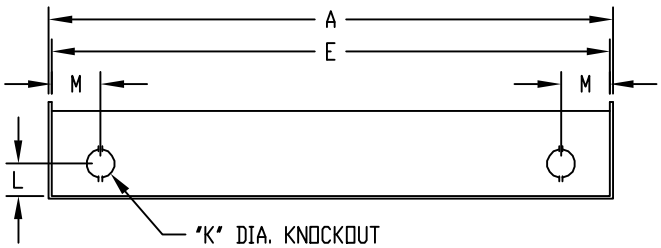

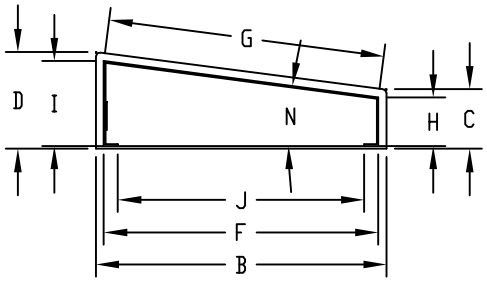

PART No.	A	B	C	D	E	F	G	H	I	J	K	L	M	N
KB-13200	7.218	5.750	1.718	2.468	7.000	5.500	5.547	1.500	2.250	4.625	0.500	0.750	0.750	7°46′
KB-13201	12.844	7.000	1.844	2.750	12.625	6.500	6.562	1.500	2.375	4.750	0.875	1.000	1.500	7°40′
KB-13202	17.468	9.000	1.844	3.000	17.250	8.500	8.578	1.500	2.625	6.750	0.875	1.000	1.500	7°32′