Part Number: JP-8783-***
Description: Large Angled Nose Telecom Clip with Ben of Nails and Single Spike
3107

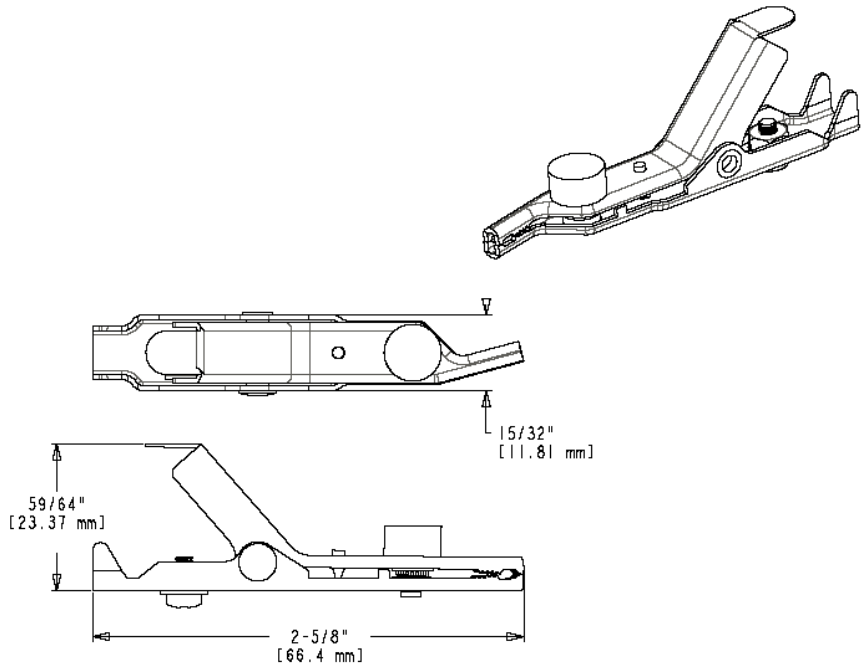

- Large Angled Nose Telecom Clip with Ben of Nails and Single Spike
- Mueller – J.S. Popper brand
- Jaw opens 1.0” (25.4 mm)
- Uses single spike and bed of nails to pierce insulation
- Material: nickel-silver jaws; includes brass screw, brass nut, brass washer, and bronze star washer
- Length: 2.61” (66.4 mm)
- Connection Options: -N Without Hardware, -L With Loose Hardware, -J Banana Jack, -TJ Threaded Banana Jack
- RoHS Compliant

Mueller Electric Company
1625 E. 31st Street
Cleveland, Ohio 44114
ISO 9001:2000
Over 95 Years Of Innovation
www.muellerelectric.com
TEL. 800-955-2629
TEL. 216-771-5225
FAX. 216-771-3068