T-Tron® Very Fast-Acting Fuses — JJS

Class T — 600 Volt, 1 to 800 Amps



Catalog Symbol: JJS
Current-Limiting
Very Fast-Acting
Ampere Rating: 1 to 800 Amperes
Voltage Rating: 600 Volts AC (or less)*
Interrupting Rating: 200,000A RMS Sym.
Agency Approval:
U.L. Listed, Std. 248-15, Class T, Guide JDDZ, File E4273
CSA Certified, C22.2 No. 248.15, Class 1422-02, File 53787

Catalog Numbers

JJS-1	JJS-45	JJS-200
JJS-2	JJS-50	JJS-225
JJS-3	JJS-60	JJS-250
JJS-6	JJS-70	JJS-300
JJS-10	JJS-80	JJS-350
JJS-15	JJS-90	JJS-400
JJS-20	JJS-100	JJS-450
JJS-25	JJS-110	JJS-500
JJS-30	JJS-125	JJS-600
JJS-35	JJS-150	JJS-800
JJS-40	JJS-175	—

Carton Quantity and Weight

Catalog Number	Carton Qty.	Weight** Lbs.	Weight** Kg.
1–30	10	0.33	0.149
35–60	10	0.82	0.371
70–100	5	0.51	0.231
110–200	1	0.192	0.087
225–400	1	0.46	0.208
450–600	1	0.85	0.385
800	1	1.65	0.748

*15-400A rated 300 Vdc and 10 KAIC.
**Weight per carton.

Dimensional Data

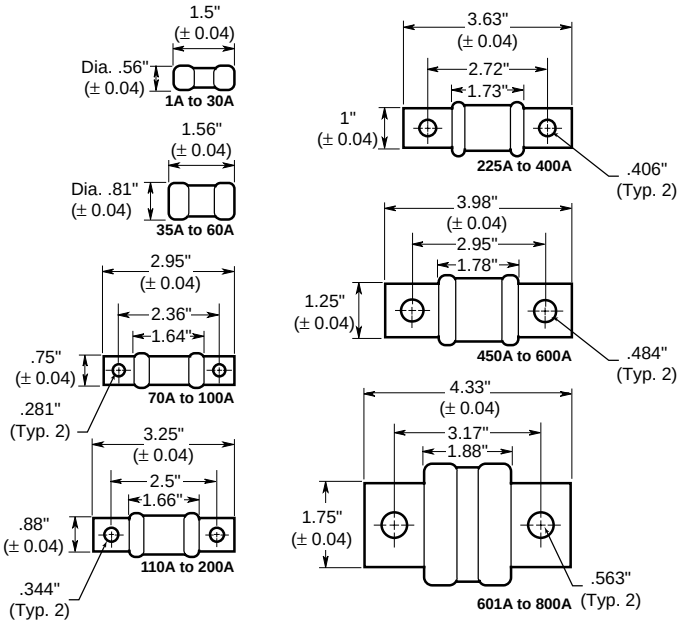

- Small, space-saving fuses provide a high degree of current-limitation on short-circuits for excellent component protection.
- Commonly applied in electric heat circuits, load center, disconnect switches, and meters.
- The small size of the T-Tron fuses permits installation in panelboards and control centers for system upgrading when existing circuit breakers cannot safely interrupt larger available short-circuit currents.
- High speed of response for semiconductor protection.

Standard T Fuseblocks (600V) Catalog Data

Amps	Poles	Catalog Numbers: Screw	Catalog Numbers: Box Lug
1	1	T60030-1SR	T60030-1CR
to	2	T60030-2SR	T60030-2CR
30	3	T60030-3SR	T60030-3CR
31	1	T60060-1SR	T60060-1CR
to	2	T60060-2SR	T60060-2CR
60	3	T60060-3SR	T60060-3CR
61	1	—	T60100-1CR
to	2	—	T60100-2CR
100	3	—	T60100-3CR
101-200	1	—	T60200-1C
	3	—	1B0089
201-400	1	—	T60400-1C
401-600	1	—	T60600-1C

CE CE logo denotes compliance with European Union Low Voltage Directive (50-1000 Vac, 75-1500 Vdc). Refer to BIF document #8002 or contact Bussmann Application Engineering at 636-527-1270 for more information.

T-Tron® Very Fast-Acting Fuses JJS

Class T — 600 Volt, 1 to 800 Amps

Current-Limitation Curves

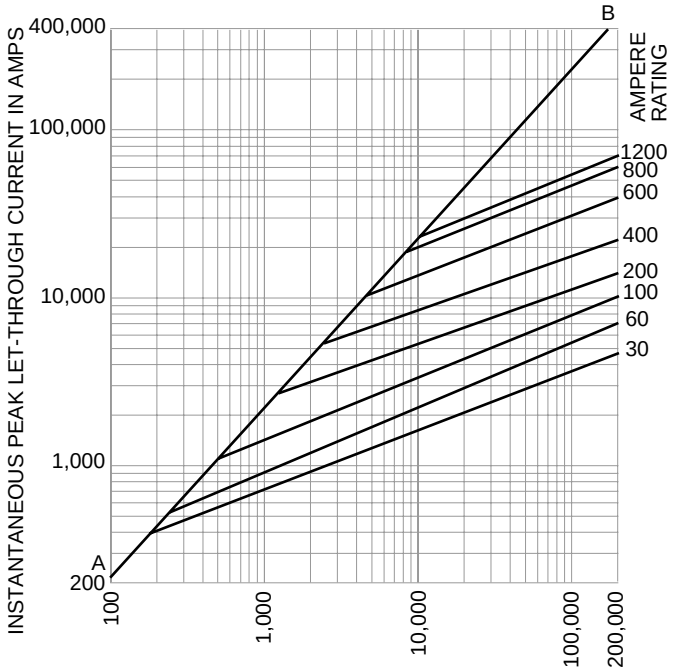

A–B=ASYMMETRICAL AVAILABLE PEAK (2.3 X SYMM RMS AMPS)

Time-Current Characteristic Curves–Average Melt

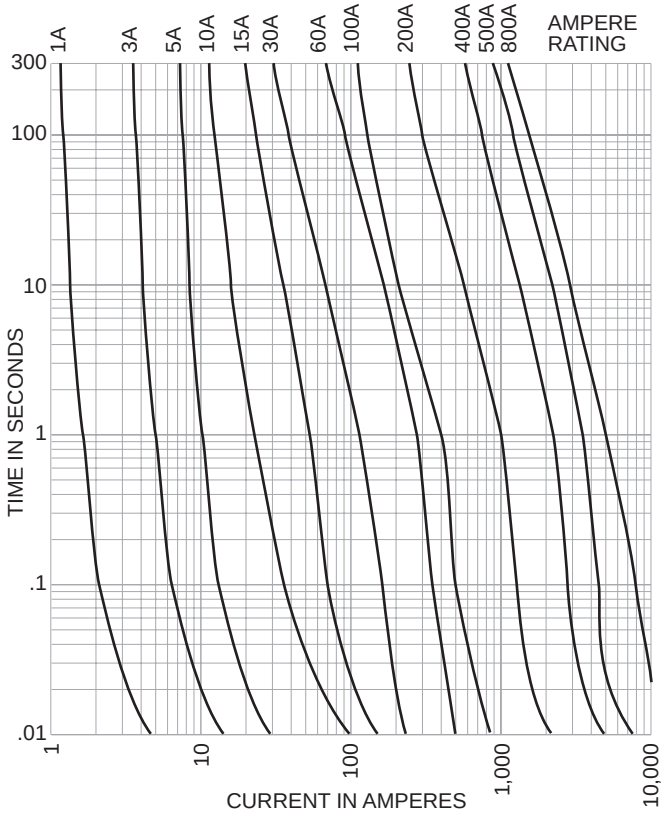

Custom Designs

- Printed circuit board variations available.

U.L. Component Recognized

File E56412, JFHR2, 600Vac, 200,000 Amp IR

JJS-1-30

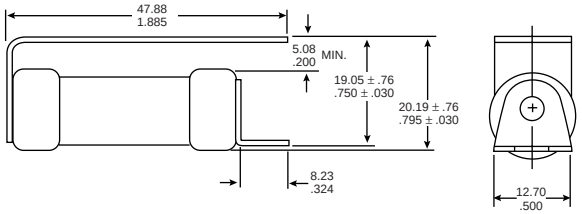

JJS-35-60

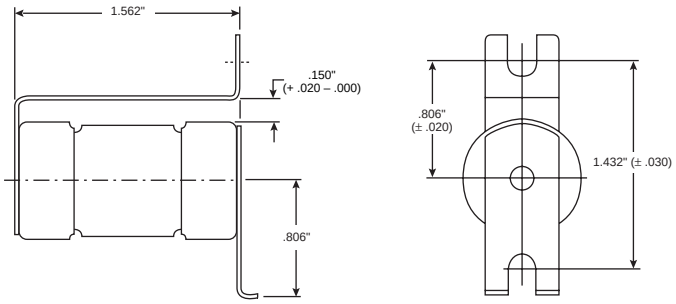

The only controlled copy of this BIF document is the electronic read-only version located on the Bussmann Network Drive. All other copies of this document are by definition uncontrolled. This bulletin is intended to clearly present comprehensive product data and provide technical information that will help the end user with design applications. Bussmann reserves the right, without notice, to change design or construction of any products and to discontinue or limit distribution of any products. Bussmann also reserves the right to change or update, without notice, any technical information contained in this bulletin. Once a product has been selected, it should be tested by the user in all possible applications.