Medium Voltage Fuses



Section Contents

Page

Introduction 72

E-Rated Fues
For transformers & feeders 75
CL-14 & bolt-in 76
CL-14 77
For potential & small power transformers 78-79

R-Rated fuses for motor circuit protection . . . 80-82

British IEC fuses for motor circuit protection . . . 83

DIN IEC fuses for transformer protection 84

Potential transformer fuses 85

British IEC fuses for oil-filled switchgear 86

Fast-acting fuses 87

EEI-NEMA Type K & T and Type H & N fuses . . . 88

BBU Boric acid fuses 89-90

Fuseclips for medium and high voltage fuses . . . 91

Medium Voltage Fuses

Worldwide Circuit Protection Solutions

Cooper Bussmann is a world-leading supplier of medium voltage fuses. Each product is backed by an efficient worldwide distribution network with unrivaled service and technical support. Cooper Bussmann circuit protection solutions comply with major international standards: ANSI, BS, DIN, IEC and UL.

Fuse Types

Medium voltage fuses generally fit into two categories – expulsion fuses and current limiting fuses. The definitions per ANSI C37.40 are:

Expulsion Fuse: "A vented fuse in which the expulsion effect of the gases produced by internal arcing, either alone or aided by other mechanisms results in current interruption." Expulsion fuses will limit the duration of an overcurrent event, but they will not limit the magnitude of fault current. Cooper Bussmann offers two types of expulsion fuses: replacement fuse links for fused cutouts and boric acid fuses.

Current Limiting Fuse: "A fuse unit that, when in its current-responsive element is melted by a current within the fuse's specified current-limiting range, abruptly introduces a high resistance to reduce current magnitude and duration, resulting in subsequent current interruption." A current limiting fuse will reduce the magnitude a fault current as well as limit the duration of the overcurrent event when operating in its current limiting range. Cooper Bussmann offers a broad range of current limiting fuses for protection of feeders, transformers and motor circuits designed to ANSI, BS, DIN and IEC standards.

Medium Voltage Current Limiting Fuses

Current limiting fuses are classified into three categories:

1. Full Range – defined by ANSI C37.40 as "a fuse capable of interrupting all currents from the maximum rated interrupting current down to the minimum continuous current that causes the melting of the fusible element(s), when the fuse is applied at the maximum ambient temperature specified by the manufacturer." It is able to interrupt any current that will melt its element.

2. General Purpose – defined by ANSI C37.40 as "a fuse capable of interrupting all currents from the maximum rated interrupting current down to the current that causes melting of the fusible element(s) in one hour." Not all currents fall within this range. It is possible for the fuse to be exposed to an overcurrent lower than the value given by the one hour criteria. In that case, a different overcurrent protection device would be required to interrupt the overcurrent.

3. Back-up – defined by ANSI C37.40 as "a fuse capable of interrupting all currents from the maximum interrupting rating current down to the minimum interrupting current."
The minimum interrupting current is the lowest current that the fuse will be able to clear properly. This creates a need to place a low current interrupting device, such as motor overloads, in series with the back-up rated fuse.

E- and R-Rated Fuses

In North America, current limiting fuses typically fall into the category of E-Rated fuses and R-Rated fuses. Cooper Bussmann also offers a wide range of current limiting fuses designed to BS, DIN and IEC standards.

E-Rated fuses are used to protect feeder circuits, power transformers and potential transformers. E-Rated fuses have defined current response times specified by ANSI C37.46. E-Rated fuses 100A and below must melt in 300sec at an rms current within the range of 200% to 240% of the continuous current rating. E-Rated fuses above 100A must melt in 600sec at an rms current within the range of 240% to 264% of the continuous current rating of the fuse. Cooper Bussmann offers a wide variety of full range and general purpose E-Rated fuses from 2.4kV up to 38kV.

R-Rated fuses are back-up fuses that provide short-circuit protection for motor circuits. They are applied with MV motor starters which provide the overload protection for the circuit. R-Rated fuses also have defined current response times specified by ANSI C37.46. R-Rated fuses will melt in a range of 15 – 35sec at a current equal to 100 times the "R" rating. Cooper Bussmann offers 2.4kV, 5.08kV, 7.2kV and 8.3kV R-Rated fuses for motor circuit protection.

E-rated Fuses for Transformers and Feeders

MV055 and MV155



Specifications

Description: E-rated medium, voltage current-limiting fuses: for transformer and feeder protection.

Dimensions: See Catalog Numbers table.

Construction: Silver ribbon element surrounded by silica filler housed in a fiberglass tube and plated endcaps. An epoxy paint protects the fuse tube from the surrounding environment.

Ratings:

Volts: — 5.5kV (5-450A)
— 15.5kV (5-200A)
Amps: — 5-450A (5.5kV)
— 5-200A (15.5kV)
IR: — 50kA Sym. Max

Agency Information: Meets E requirements per ANSI C37.46, Meets full range requirements per ANSI C37.40.

MV055 Features and Benefits

- Standard clip center distance of 12 inches with 2 and 3 inch barrel diameters for retrofitting in existing hardware
- Open fuse indicator for ease in troubleshooting
- Full range rating with 50,000 Interrupting Rating
- Double pulsed at 90% of minimum I^2t to establish manufacturing reliability

MV055 Typical Applications

- 5.0kV Transformer Primary Protection
- 5.0kV Feeder Circuit Protection
- 5.0kV Voltage Switches
- 5.0kV Metal-enclosed Switchgear

MV155 Features and Benefits

- Standard clip center distance of 15 and 18 inches with 2 and 3 inch barrel diameters for retrofitting in existing hardware
- Open fuse indicator for ease in troubleshooting
- Full range rating with 50,000 Interrupting Rating
- Double pulsed at 90% of minimum I2t to establish manufacturing reliability

MV155 Typical Applications

- 15.0kV Transformer Primary Protection
- 15.0kV Feeder Circuit Protection
- 15.0kV Voltage Switches
- 15.0kV Metal-enclosed Switchgear

5.5kV Catalog Numbers

Catalog Numbers	Amp Rating	Min Melt I²t	Max Clear I²t	Dimensions (in)* Length	Dia.	Clip Center	Barrels
MV055F1CAX5E	5	180	2,400	15.75	2	12	1
MV055F1CAX7E	7	850	8,000				
MV055F1CAX10E	10	850	8,000				
MV055F1CAX15E	15	2,070	11,000				
MV055F1CAX20E	20	2,370	23,000				
MV055F1CAX25E	25	4,650	31,000				
MV055F1CAX30E	30	9,490	45,000				
MV055F1CAX40E	40	9,490	45,000				
MV055F1CAX50E	50	13,600	90,000				
MV055F1CAX65E	65	30,700	181,000				
MV055F1DAX10E	10	850	8,000		3		
MV055F1DAX15E	15	2,070	12,000				
MV055F1DAX20E	20	2,370	23,000				
MV055F1DAX25E	25	4,650	31,000				
MV055F1DAX30E	30	9,490	45,000				
MV055F1DAX40E	40	9,490	45,000				
MV055F1DAX50E	50	13,600	90,000				
MV055F1DAX65E	65	30,700	181,000				
MV055F1DAX80E	80	54,600	270,000				
MV055F1DAX100E	100	116,200	580,000				
MV055F1DAX125E	125	167,400	600,000				
MV055F1DAX150E	150	218,700	786,000				
MV055F1DAX175E	175	227,900	1,100,000				
MV055F1DAX200E	200	297,600	1,520,000				
MV055F2DAX250E	250	669,600	2,400,000				2
MV055F2DAX300E	300	874,800	3,149,000				
MV055F2DAX350E	350	911,600	4,376,000				
MV055F2DAX400E	400	1,190,400	6,071,000				
MV055F2DAX450E	450	1,555,000	9,796,000				

1" = 25.4mm

Recommended Fuse Clips - see page 91

Data Sheet: 6700

15.5kV Catalog Numbers

Catalog Numbers	Amp Rating	Min Melt I²t	Max Clear I²t	Dimensions* Length	Dia.	Clip Center	Barrels
MV155F1CBX5E	5	180	2,900	18.75	2	15	1
MV155F1CBX7E	7	850	8,000				
MV155F1CBX10E	10	850	8,000				
MV155F1CBX15E	15	2,070	12,000				
MV155F1CBX20E	20	2,370	23,000				
MV155F1CBX25E	25	4,650	31,000				
MV155F1CBX30E	30	9,490	45,000				
MV155F1DBX10E	10	850	8,000		3		
MV155F1DBX15E	15	2,070	12,000				
MV155F1DBX20E	20	2,370	23,000				
MV155F1DBX25E	25	4,650	31,000				
MV155F1DBX30E	30	9,490	45,000				
MV155F1DBX40E	40	9,490	45,000				
MV155F1DBX50E	50	13,600	90,000				
MV155F1DBX65E	65	30,700	181,000				
MV155F1DBX80E	80	54,600	270,000				
MV155F1DBX100E	100	116,200	600,000				
MV155F2DBX125E	125	123,000	677,000				2
MV155F2DBX150E	150	218,700	1,287,000				
MV155F2DBX175E	175	314,700	1,689,000				
MV155F2DBX200E	200	465,100	2,405,000				
MV155F1DCX65E	65	30,700	181,000	21.75		18	1
MV155F1DCX80E	80	54,600	270,000				
MV155F1DCX100E	100	116,200	600,000				
MV155F2DCX125E	125	123,000	677,000				2
MV155F2DCX150E	150	218,700	1,287,000				
MV155F2DCX175E	175	314,700	1,689,000				
MV155F2DCX200E	200	465,100	2,405,000				

*1" = 25.4mm.

Recommended Fuse Clips - see page 91

Data Sheet: 6701 (MV155)

E-rated Fuses for Transformer & Feeders

JCX, JCY, JCU, JCZ and JDZ



Specifications

Description: Indoor/enclosure E-rated medium voltage, current-limiting fuses for feeders and power transformers with blown fuse indication.

Dimensions: See Catalog Numbers table.

Construction: plated ferrules.

Ratings:

Volts: — 2750-8300V (See Catalog Numbers table for details)

Amps: — ½-750A

IR: — 40-63kA Sym

— 60-100kA ASYM

— See Catalog Numbers table for details

Features and Benefits

- Physically dimensioned for retrofitting in existing hardware
- Open fuse indicator for ease in troubleshooting
- Full range ANSI classification

Typical Applications

- Medium Voltage Transformer Primary Protection
- Medium Voltage Feeder Circuit Protection
- Medium Voltage Switches
- Medium Voltage Metal-enclosed Switchgear

Catalog Numbers

Catalog Numbers	Amp Rating	Maximum Design Voltage	Construction	Maximum Interrupting Capacity		Dimensions - in (mm)	
				Amps (Asym.)	Amps (Sym.)	Length	Diameter
2400V; E-Rated; Indoor/Enclosure							
JCX-½E	0.5	2750	Single	60,000	40,000	9.19 (233.38)	2 (50.8)
JCX-1E	1	2750	Single	60,000	40,000	9.19 (233.38)	2 (50.8)
JCX-2E	2	2750	Single	60,000	40,000	9.19 (233.38)	2 (50.8)
JCX-3E	3	2750	Single	60,000	40,000	9.19 (233.38)	2 (50.8)
JCX-5E	5	2750	Single	60,000	40,000	9.19 (233.38)	2 (50.8)
JCX-7E	7	2750	Single	60,000	40,000	9.19 (233.38)	2 (50.8)
JCX-10E	10	2750	Single	60,000	40,000	9.19 (233.38)	2 (50.8)
JCX-15E	15	2750	Single	80,000	50,000	9.5 (241.3)	2.1 (53.34)
JCX-20E	20	2750	Single	80,000	50,000	9.5 (241.3)	2.1 (53.34)
JCX-25E	25	2750	Single	80,000	50,000	9.5 (241.3)	2.1 (53.34)
JCX-30E	30	2750	Single	80,000	50,000	10.81 (276.35)	3 (76.2)
JCX-40E	40	2750	Single	80,000	50,000	10.81 (276.35)	3 (76.2)
JCX-50E	50	2750	Single	80,000	50,000	10.81 (276.35)	3 (76.2)
JCX-65E	65	2750	Single	80,000	50,000	10.81 (276.35)	3 (76.2)
JCX-80E	80	2750	Single	80,000	50,000	10.81 (276.35)	3 (76.2)
JCX-100E	100	2750	Single	80,000	40,000	10.81 (276.35)	3 (76.2)
JCX-125E	125	2750	Single	80,000	50,000	10.81 (276.35)	3 (76.2)
JCX-150E	150	2750	Single	80,000	50,000	10.81 (276.35)	3 (76.2)
JCX-200E	200	2750	Single	80,000	50,000	10.81 (276.35)	3 (76.2)
JCX-225E	225	2750	Single	80,000	50,000	10.81 (276.35)	3 (76.2)
JCX-250E/280X	250/280	2750	Double	80,000	50,000	10.81 (276.35)	3 (76.2)
JCX-300E/325X	300/325	2750	Double	80,000	50,000	10.81 (276.35)	3 (76.2)
JCX-350X	350	2750	Double	80,000	50,000	10.81 (276.35)	3 (76.2)
JCX-400X	400	2750	Double	80,000	50,000	10.81 (276.35)	3 (76.2)
JCX-450X	450	2750	Double	80,000	50,000	10.81 (276.35)	3 (76.2)
5500V; E-Rated; Indoor/Enclosure							
JCY-½E	0.5	5500	Single	60,000	40,000	11.19 (284.18)	2 (50.8)
JCY-1E	1	5500	Single	60,000	40,000	11.19 (284.18)	2 (50.8)
JCY-2E	2	5500	Single	60,000	40,000	11.19 (284.18)	2 (50.8)
JCY-3E	3	5500	Single	60,000	40,000	11.19 (284.18)	2 (50.8)
JCY-5E	5	5500	Single	60,000	40,000	11.19 (284.18)	2 (50.8)
JCY-7E	7	5500	Single	60,000	40,000	11.19 (284.18)	2 (50.8)
JCY-10E	10	5500	Single	60,000	40,000	11.19 (284.18)	2 (50.8)
JCY-15E	15	5500	Single	60,000	40,000	11.19 (284.18)	2 (50.8)
JCY-20E	20	5500	Single	60,000	40,000	11.19 (284.18)	2 (50.8)
JCY-25E	25	5500	Single	60,000	40,000	11.19 (284.18)	2 (50.8)

Contact Cooper Bussmann for the latest product information on E-Rated fuses for transformer and feeder protection.
Recommended fuseclips: see page 91 - 1A0065, 9078A67G04, A3354730

COOPER Bussmann

E-rated Fuses for Transformer & Feeders

Catalog Numbers: E-Rated; Indoor/Enclosure

Catalog Numbers	Amp Rating	Maximum Design Voltage	Construction	Maximum Interrupting Capacity		Dimensions - in (mm)	
				Amps. (Asym.)	Amps. (Sym.)	Length	Diameter
5500V; E-Rated; Indoor/Enclosure							
JCU-10E	10	5500	Single	80,000	50,000	17.81 (452.4)	3 (76.2)
JCU-15E	15	5500	Single	80,000	50,000	12.88 (327.0)	2.1 (53.34)
JCU-20E	20	5500	Single	80,000	50,000	12.88 (327.0)	2.1 (53.34)
JCU-25E	25	5500	Single	80,000	50,000	12.88 (327.0)	2.1 (53.34)
JCU-30E	30	5500	Single	100,000	63,000	17.88 (454.15)	3 (76.20)
JCU-40E	40	5500	Single	100,000	63,000	17.88 (454.15)	3 (76.20)
JCU-50E	50	5500	Single	100,000	63,000	17.88 (454.15)	3 (76.20)
JCU-65E	60	5500	Single	100,000	63,000	17.88 (454.15)	3 (76.20)
JCU-80E	80	5500	Single	100,000	63,000	17.88 (454.15)	3 (76.20)
JCU-100E	100	5500	Single	100,000	63,000	17.88 (454.15)	3 (76.20)
JCU-125E	125	5500	Single	100,000	63,000	17.88 (454.15)	3 (76.20)
JCU-150E	150	5500	Single	100,000	63,000	17.88 (454.15)	3 (76.20)
JCU-175E	175	5500	Single	100,000	63,000	17.88 (454.15)	3 (76.20)
JCU-200E	200	5500	Single	100,000	63,000	17.88 (454.15)	3 (76.20)
JCU-250E	250	5500	Single	100,000	63,000	17.88 (454.15)	3 (76.20)
JCU-300E	300	5500	Double	100,000	63,000	17.88 (454.15)	3 (76.20)
JCU-350E	350	5500	Double	100,000	63,000	17.88 (454.15)	3 (76.20)
JCU-400E	400	5500	Double	100,000	63,000	17.88 (454.15)	3 (76.20)
JCU-450E	450	5500	Double	100,000	63,000	17.88 (454.15)	3 (76.20)
JCU-600E	600	5500	*	80,000	50,000	28.81 (731.77)	4 (101.60)
JCU-750E	750	5500	*	80,000	50,000	28.81 (731.77)	4 (101.60)
8300V; E-Rated; Indoor/Enclosure							
JCZ-15E	15	8300	Single	80,000	50,000	15.51 (393.95)	2.1 (53.34)
JCZ-20E	20	8300	Single	80,000	50,000	15.51 (393.95)	2.1 (53.34)
JCZ-25E	25	8300	Single	80,000	50,000	15.51 (393.95)	2.1 (53.34)
JCZ-30E	30	8300	Single	80,000	50,000	17.88 (454.15)	3 (76.2)
JCZ-40E	40	8300	Single	80,000	50,000	17.88 (454.15)	3 (76.2)
JCZ-50E	50	8300	Single	80,000	50,000	17.88 (454.15)	3 (76.2)
JCZ-65E	65	8300	Single	80,000	50,000	17.88 (454.15)	3 (76.2)
JCZ-80E	80	8300	Single	80,000	50,000	17.88 (454.15)	3 (76.2)
JCZ-100E	100	8300	Single	80,000	50,000	17.88 (454.15)	3 (76.2)
JCZ-125E	125	8300	Single	80,000	50,000	17.88 (454.15)	3 (76.2)
JCZ-150E	150	8300	Single	80,000	50,000	17.88 (454.15)	3 (76.2)
JCZ-200E	200	8300	Double	80,000	50,000	17.88 (454.15)	3 (76.2)
JDZ-20E	20	8300	Single	80,000	50,000	15.88 (403.2)	3 (76.2)
JDZ-25E	25	8300	Single	80,000	50,000	15.88 (403.2)	3 (76.2)
JDZ-30E	30	8300	Single	80,000	50,000	15.88 (403.2)	3 (76.2)
JDZ-40E	40	8300	Single	80,000	50,000	15.88 (403.2)	3 (76.2)
JDZ-50E	50	8300	Single	80,000	50,000	15.88 (403.2)	3 (76.2)
JDZ-65E	65	8300	Single	80,000	50,000	15.88 (403.2)	3 (76.2)
JDZ-80E	80	8300	Double	80,000	50,000	15.88 (403.2)	3 (76.2)
JDZ-100E	100	8300	Double	80,000	50,000	15.88 (403.2)	3 (76.2)
JDZ-125E	125	8300	Double	80,000	50,000	15.88 (403.2)	3 (76.2)

Recommended fuseclips: see page 91 - 1A0065, 9078A67G04, A3354730

General Notes:

1. All fuses are fitted with a striker pin which can be used for indication or tripping purposes.
2. The fuses are suitable for use either indoors or outdoors.
3. These fuses are interchangeable with corresponding fuses produced by most other leading North American manufacturers.

Contact Cooper Bussmann for the latest product information on E-Rated fuses for transformer and feeder protection.

*Bolt on mounting

E-rated Fuses: CL-14 & Bolt-In

ECL055

Specifications

Description: E-rated medium voltage, current-limiting fuses for transformer and feeder protection.

Construction: Filament wound, glass epoxy fuse tube, with silica filler, and silver-plated copper terminals and endcaps containing a silver element in a double concentric helical configuration.

Ratings:

Volts: — 5.5kV

Amps: — 10-900A

IR: — 63kA Sym. Max

Agency Information: Meets E requirements per ANSI C37.46, Meets General Purpose requirements per ANSI C37.40.

Features and Benefits

- Clip-lock and bolt-in style available in double and triple barrel fuse designs for application flexibility
- The filament wound, glass epoxy fuse tube provides UV and moisture protection, making these medium voltage fuses suitable for both indoor and outdoor applications
- Open fuse indication (indicator travel distance is 16mm) easily integrates into automation schemes
- 50/60Hz operating frequency make these fuses applicable world-wide

Typical Applications

- 5.0kV Transformer Primary Protection
- 5.0kV Feeder Circuit Protection
- 5.0kV Voltage Switches
- 5.0kV Metal-enclosed Switchgear



Catalog Numbers

Catalog Numbers	Amp Rating	Voltage	IR Max Sym.	# of Barrels	Style
ECL055-10E	10	5.5kV	63kA	1	Clip-Lock
ECL055-15E	15	–			
ECL055-20E	20	–			
ECL055-25E	25	–			
ECL055-30E	30	–			
ECL055-40E	40	–			
ECL055-50E	50	–			
ECL055-65E	65	–			
ECL055-80E	80	–			
ECL055-100E	100	–			
ECL055-125E	125	–			
ECL055-150E	150	–			
ECL055-200E	200	–			
ECL055-250E	250	–			
ECL055-300E	300	–		2	Clip-Lock
ECL055-400E	400	–			
ECL055-450E	450	–			
ECL055-500E	500	–			
ECL055-600E	600	–			
ECL055-750E	750	–		3	Bolt-In
ECL055-900E	900	–			

Catalog Number Construction (Example)

Catalog Number	Voltage Rating	Amp Rating
ECL	055 055 = 5.5 kV	500E

Catalog Number Cross Reference

Cooper Bussmann Catalog Numbers	Ferraz-Shawmut New Catalog #	Ferraz-Shawmut Old Catalog #
ECL055-10E	A055C1DORO-10E	225-007-937
ECL055-15E	A055C1DORO-15E	225-007-938
ECL055-20E	A055C1DORO-20E	225-007-939
ECL055-25E	A055C1DORO-25E	225-007-940
ECL055-30E	A055C1DORO-30E	225-007-941
ECL055-40E	A055C1DORO-40E	225-007-942
ECL055-50E	A055C1DORO-50E	225-007-943
ECL055-65E	A055C1DORO-65E	225-007-944
ECL055-80E	A055C1DORO-80E	225-007-945
ECL055-100E	A055C1DORO-100E	225-007-946
ECL055-125E	A055C1DORO-125E	225-007-947
ECL055-150E	A055C1DORO-150E	225-007-948
ECL055-200E	A055C1DORO-200E	225-007-949
ECL055-250E	A055C1DORO-250E	225-007-950
ECL055-300E	A055C1DORO-300E	225-007-951
ECL055-400E	A055C1DORO-400E	225-007-952
ECL055-450E	A055C2DORO-450E	225-007-953
ECL055-500E	A055C2DORO-500E	225-007-954
ECL055-600E	A055C2DORO-600E	225-007-955
ECL055-750E	A055B3DORO-750E	A055X750E-4
ECL055-900E	A055B3DORO-900E	A055X900E-4

Data Sheet: 9002

COOPER Bussmann

E-rated Fuses: CL-14

ECL155

Specifications

Description: E-rated medium voltage, current-limiting fuses for transformer and feeder protection.

Construction: Filament wound, glass epoxy fuse tube, with silica filler, and silver-plated copper terminals and endcaps containing a silver element in a double concentric helical configuration.

Ratings:

Volts: — 15.5kV

Amps: — 10-300A

IR: — 63kA Sym. (10-200A)

— 50kA Sym. (250-300A)

Agency Information: Meets E requirements per ANSI C37.46, Meets General Purpose requirements per ANSI C37.40.

Features and Benefits

- Clip-lock double barrel fuse design assures positive installation
- The filament wound, glass epoxy fuse tube provides UV and moisture protection, making these medium voltage fuses suitable for both indoor and outdoor applications
- Open fuse indication (indicator travel distance is 16mm) easily integrates into automation schemes
- 50/60 Hz operating frequency make these fuses applicable world-wide

Typical Applications

- 15.0kV Transformer Primary Protection
- 15.0kV Feeder Circuit Protection
- 15.0kV Voltage Switches
- 15.0kV Metal-enclosed Switchgear

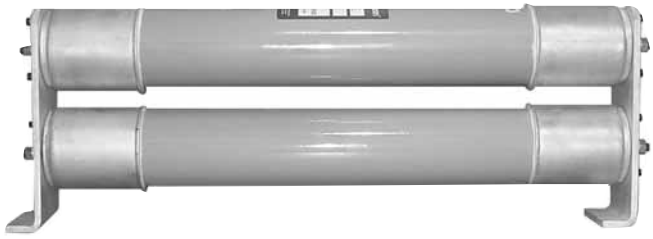

Catalog Numbers

Catalog Numbers	Amp Rating	Voltage	IR Voltage Max Sym.	# of Barrels	Style
ECL155-10E	10	15.5kV	63kA	1	Clip-Lock
ECL155-15E	15				
ECL155-20E	20				
ECL155-25E	25				
ECL155-30E	30				
ECL155-40E	40				
ECL155-50E	50				
ECL155-65E	65				
ECL155-80E	80				
ECL155-100E	100				
ECL155-125E	125				
ECL155-150E	150			2	
ECL155-200E	200				
ECL155-250E	250		50kA		
ECL155-300E	300				

Catalog Number Construction (Example)

Catalog Number	Voltage Rating	Amp Rating
ECL	155 155 = 15.5 kV	300E

Catalog Number Cross Reference

Cooper Bussmann Catalog Numbers	Ferraz-Shawmut New Catalog #	Ferraz-Shawmut Old Catalog #
ECL155-10E	A155C1DORO-10E	225-007-967
ECL155-15E	A155C1DORO-15E	225-007-968
ECL155-20E	A155C1DORO-20E	225-007-969
ECL155-25E	A155C1DORO-25E	225-007-970
ECL155-30E	A155C1DORO-30E	225-007-971
ECL155-40E	A155C1DORO-40E	225-007-972
ECL155-50E	A155C1DORO-50E	225-007-973
ECL155-65E	A155C1DORO-65E	225-007-974
ECL155-80E	A155C1DORO-80E	225-007-975
ECL155-100E	A155C1DORO-100E	225-007-976
ECL155-125E	A155C2DORO-125E	225-007-977
ECL155-150E	A155C3DORO-150E	225-007-978
ECL155-200E	A155C3DORO-200E	225-007-979
ECL155-250E	A155C3DORO-250E	225-007-980
ECL155-300E	A155C3DORO-300E	225-007-981

Data Sheet: 9004

E-rated Fuses for Potential & Small Power Transformers

JCD, JCW, JCQ, JCI & JCT



Specifications

Description: Indicating and non-indicating E-rated medium voltage, current-limiting fuses for potential and small power transformers.

Dimensions: See Catalog Numbers table.

Construction: Plated ferrules.

Ratings:

Volts: — 2.4-15.5kV (See Catalog Numbers table for details)
Amps: — ½-10A
IR: — 25-80kA Sym
— 40-130kA ASYM
— See Catalog Numbers table for details

Features and Benefits

- Sized for retrofitting in existing hardware
- Space saving size

Typical Applications

- Primary protection of medium voltage potential transformers
- Primary protection of small medium voltage service transformers
- Primary protection of small medium voltage control transformers

Catalog Numbers

Catalog Numbers	Amp Rating	Maximum Design Voltage	IR RMS Sym.	Dimensions - in (mm) Length	Diameter
2400V; E-Rated Fuse; Non-Indicating					
JCD-½E	0.5	2.75kV	63kA	4.50 (114)	0.80 (20.32)
JCD-1E	1	2.75kV	40kA	4.50 (114)	0.80 (20.32)
JCD-2E	2	2.75kV	40kA	4.50 (114)	0.80 (20.32)
JCD-5E	5	2.75kV	25kA	4.50 (114)	0.80 (20.32)
2450/5500V; E-Rated Fuse; Non-Indicating					
JCW-½E	0.5	2.75/5.5kV	40kA	7.312 (185.72)	1.563 (39.70)
JCW-1E	1	2.75/5.5kV	40kA	7.312 (185.72)	1.563 (39.70)
JCW-2E	2	2.75/5.5kV	40kA	7.312 (185.72)	1.563 (39.70)
JCW-3E	3	2.75/5.5kV	40kA	7.312 (185.72)	1.563 (39.70)
JCW-5E	5	2.75/5.5kV	40kA	7.312 (185.72)	1.563 (39.70)
5500V; E-Rated Fuse; Indicating					
JCQ-½E	0.5	5.5kV	80kA	9.5 (241.3)	1.6 (40.64)
JCQ-1E	1	5.5kV	80kA	9.5 (241.3)	1.6 (40.64)
JCQ-11⁄2E	1.5	5.5kV	80kA	9.5 (241.3)	1.6 (40.64)
JCQ-3E	3	5.5kV	80kA	9.5 (241.3)	1.6 (40.64)
JCQ-5E	5	5.5kV	80kA	9.5 (241.3)	1.6 (40.64)
JCQ-10E	10	5.5kV	80kA	9.5 (241.3)	1.6 (40.64)
8300V; E-Rated Fuse; Indicating					
JCI-½E	0.5	8.3kA	80kA	9.5 (241.3)	1.6 (40.64)
JCI-3E	3	8.3kA	80kA	12.88 (327.15)	1.6 (40.64)
JCI-5E	5	8.3kA	50kA	12.88 (327.15)	1.6 (40.64)
JCI-10E	10	8.3kA	50kA	12.88 (327.15)	1.6 (40.64)
15,500V; E-Rated Fuse; Indicating					
JCT-½E	0.5	15.5kV	80kA	12.93 (328.42)	1.6 (40.64)
JCT-1E	1	15.5kV	80kA	12.93 (328.42)	1.6 (40.64)
JCT-1-1⁄2E	1.5	15.5kV	80kA	12.93 (328.42)	1.6 (40.64)
JCT-3E	3	15.5kV	80kA	17.5 (444.5)	1.6 (40.64)
JCT-5E	5	15.5kV	80kA	17.5 (444.5)	1.6 (40.64)
JCT-10E	10	15.5kV	80kA	17.5 (444.5)	1.6 (40.64)

Fuse clip for 1.56 and 1.6 inch diameter fuses - 1A0835.
Fuse clip for 0.81 inch diameter fuses - 1A1837.

Data Sheet: 6002

COOPER Bussmann

E-rated Fuses for Potential & Small Power Transformers

AB, AD, AM and CAV



Specifications

Description: Indicating and non-indicating E-rated medium voltage, current-limiting fuses for potential and small power transformers.

Dimensions: See Catalog Numbers table.

Ratings:

Volts: — 5.5-38kV
Amps: — 0.5-15A
IR: — 40kA-80kA Sym.
— See Catalog Numbers table for details

Features and Benefits

- Sized for retrofitting in existing hardware
- Space saving size

Typical Applications

- Primary protection of medium voltage potential transformers
- Primary protection of small medium voltage service transformers
- Primary protection of small medium voltage control transformers

Catalog Numbers

Catalog Numbers	Amp Rating	Maximum Design Voltage	IR RMS Sym.	Dimensions - in (mm)	
				Length	Diameter
5.5ABWNA0.5E	0.5	5.5kV	50kA	5.6 (142.2)	1 (25.4)
5.5ABWNA1E	1	5.5kV	50kA	5.6 (142.2)	1 (25.4)
5.5ABWNA2E	2	5.5kV	50kA	5.6 (142.2)	1 (25.4)
5.5ABWNA3E	3	5.5kV	50kA	5.6 (142.2)	1 (25.4)
5.5ABWNA5E	5	5.5kV	50kA	5.6 (142.2)	1 (25.4)
5.5AMWNA0.5E	0.5	5.5kV	50kA	5.6 (142.2)	0.81 (20.6)
5.5AMWNA1.0E	1.5	5.5kV	50kA	5.6 (142.2)	0.81 (20.6)
5.5AMWNA2.0E	2.5	5.5kV	50kA	5.6 (142.2)	0.81 (20.6)
5.5AMWNA3.0E	3.5	5.5kV	50kA	5.6 (142.2)	0.81 (20.6)
5.5AMWNA4.0E	4.5	5.5kV	50kA	5.6 (142.2)	0.81 (20.6)
5.5AMWNA5.0E	5.5	5.5kV	50kA	5.6 (142.2)	0.81 (20.6)
5.5CAVH0.5E	0.5	5.5kV	63kA	7.375 (187.3)	1.63 (41.4)
5.5CAVH1E	1	5.5kV	63kA	7.375 (187.3)	1.63 (41.4)
5.5CAVH2E	2	5.5kV	63kA	7.375 (187.3)	1.63 (41.4)
5.5CAV15E	15	5.5kV	63kA	7.375 (187.3)	1.63 (41.4)
7.2AMWNA0.5E	0.5	7.2kV	50kA	5.6 (142.2)	0.81 (20.6)
7.2AMWNA1.0E	1	7.2kV	50kA	5.6 (142.2)	0.81 (20.6)
7.2AMWNA2.0E	2	7.2kV	50kA	5.6 (142.2)	0.81 (20.6)
7.2AMWNA3.0E	3	7.2kV	50kA	5.6 (142.2)	0.81 (20.6)
7.2AMWNA4.0E	4	7.2kV	50kA	5.6 (142.2)	0.81 (20.6)
7.2AMWNA5.0E	5	7.2kV	50kA	5.6 (142.2)	0.81 (20.6)
15.5CAV(H)0.5E*	0.5	15.5kV	80kA	12.87 (326.9)	1.63 (41.4)
15.5CAV(H)1E*	1	15.5kV	80kA	12.87 (326.9)	1.63 (41.4)
15.5CAV(H)2E*	2	15.5kV	80kA	12.87 (326.9)	1.63 (41.4)
15.5CAV3E	3	15.5kV	80kA	12.87 (326.9)	1.63 (41.4)
15.5CAV5E	5	15.5kV	80kA	12.87 (326.9)	1.63 (41.4)
15.5CAV7E	7	15.5kV	80kA	12.87 (326.9)	1.63 (41.4)
38ADMNA7E	7	38kV	40kA	17.4 (442)	2 (50.8)
38ADMNA10E	10	38kV	40kA	17.4 (442)	2 (50.8)
38CAV(H)0.5E*	0.5	38KV	40kA	17.32 (439.9)	1.63 (41.4)
38CAV(H)1E*	1	38KV	40kA	17.32 (439.9)	1.63 (41.4)
38CAV(H)2E*	2	38KV	40kA	17.32 (439.9)	1.63 (41.4)
38CAV4E	4	38KV	40kA	17.32 (439.9)	1.63 (41.4)

*Type CAVH fuses are fitted with a striker pin for indication. Omit 'H' for non-indicating fuses.
Fuseclip for 0.8 inch diameter fuses - 1A1837.
Fuseclip for 1 inch diameter fuses - A3354705.
Fuseclip for 1.6 inch diameter fuses - 1A0835.

R-rated Fuses for Motor Circuit Protection

JCG, JCH, JCK, JCK-A, JCK-B, JCL, JCL-A, JCL-B, JCR-A, & JCR-B



Specifications

Description: Indoor/enclosure R-rated medium voltage, current-limiting fuses for motor circuit protection.

Dimensions: See Dimensions illustrations.

Ratings:

Volts: — 2.4-7.2kV (See Catalog Numbers table for details)

Amps: — 25-450A (See Catalog Numbers table for details)

IR: — 50kA Sym

— 80kA ASYM

— See Catalog Numbers table for details

Agency Information: UL Recognized: 2540Vac — JCK, JCK-A, 5080Vac — JCL, JCL-A, UL Recognized (Guide #MSSS2, File #E96676).

Features and Benefits

- Physically dimensioned for retrofitting in existing hardware
- Open fuse indicator for ease in troubleshooting
- Available with optional Cutler Hammer® hookeye for ease of insertion and removal
- Classified as back-up fuses for current-limited protection of medium voltage motor controllers

Typical Applications

- Medium Voltage Motor Controllers

Dimensions - mm (in)

Figure 1

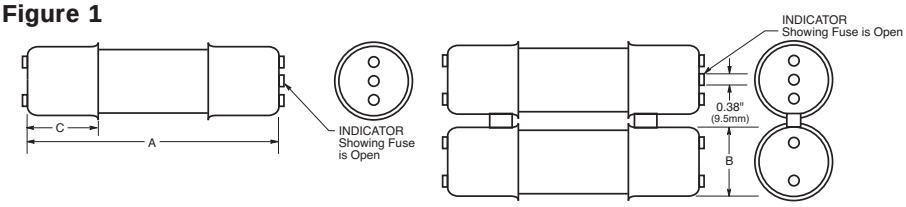

Figure 2

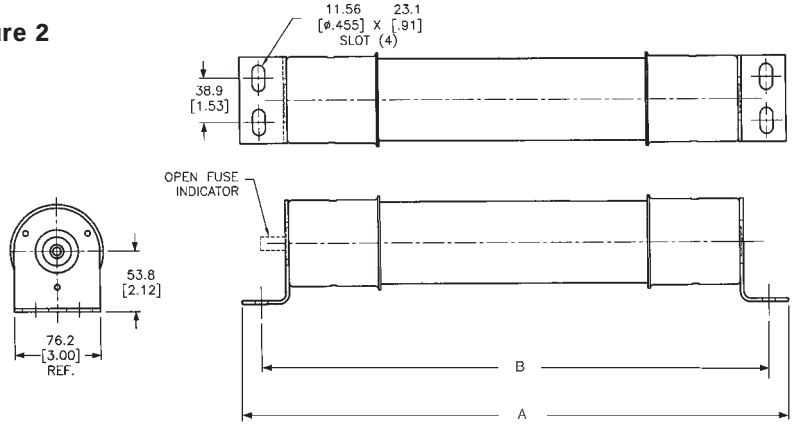

Figure 3

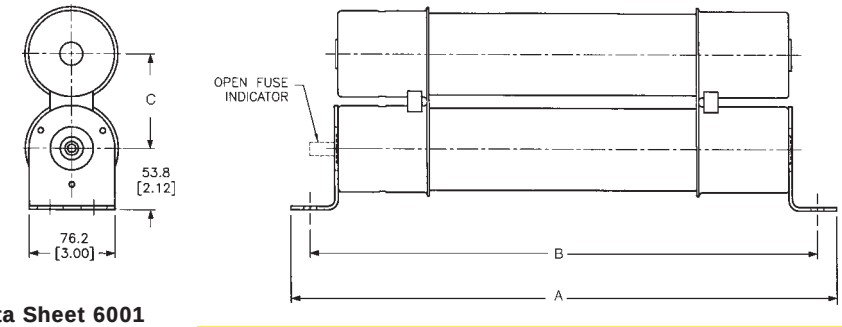

R-rated Fuses for Motor Circuit Protection

Catalog Numbers: R-Rated; Indoor/Enclosure

Catalog Numbers	Amp Ratings	Maximum Design Voltage	Dimensions - in (mm)* A	B	C	Construction	Max Int. Cap. Amps (Asym.)	Amps (Sym.)	Min Int. Cap. Amps (Sym.)
2400V (See Figure 1)									
JCK-2R	70	2540	11.24 (285.5)	3.0 (76.2)	3.0 (76.2)	Single	80,000	50,000	165
JCK-3R	100	2540	11.24 (285.5)	3.0 (76.2)	3.0 (76.2)	Single	80,000	50,000	220
JCK-4R	130	2540	11.24 (285.5)	3.0 (76.2)	3.0 (76.2)	Single	80,000	50,000	320
JCK-5R	150	2540	11.24 (285.5)	3.0 (76.2)	3.0 (76.2)	Single	80,000	50,000	410
JCK-6R	170	2540	11.24 (285.5)	3.0 (76.2)	3.0 (76.2)	Single	80,000	50,000	480
JCK-9R	200	2540	11.24 (285.5)	3.0 (76.2)	3.0 (76.2)	Single	80,000	50,000	720
JCK-12R	230	2540	11.24 (285.5)	3.0 (76.2)	3.0 (76.2)	Single	80,000	50,000	970
JCK-18R	390	2540	11.24 (285.5)	3.0 (76.2)	3.0 (76.2)	Double	80,000	50,000	1,430
JCK-24R	450	2540	11.24 (285.5)	3.0 (76.2)	3.0 (76.2)	Double	80,000	50,000	1,880
2400V — With Westinghouse Ampguard Hookeye (See Figure 1)									
JCK-A-2R	70	2540	11.24 (285.5)	3.0 (76.2)	3.0 (76.2)	Single	80,000	50,000	165
JCK-A-3R	100	2540	11.24 (285.5)	3.0 (76.2)	3.0 (76.2)	Single	80,000	50,000	220
JCK-A-4R	130	2540	11.24 (285.5)	3.0 (76.2)	3.0 (76.2)	Single	80,000	50,000	320
JCK-A-5R	150	2540	11.24 (285.5)	3.0 (76.2)	3.0 (76.2)	Single	80,000	50,000	410
JCK-A-6R	170	2540	11.24 (285.5)	3.0 (76.2)	3.0 (76.2)	Single	80,000	50,000	480
JCK-A-9R	200	2540	11.24 (285.5)	3.0 (76.2)	3.0 (76.2)	Single	80,000	50,000	720
JCK-A-12R	230	2540	11.24 (285.5)	3.0 (76.2)	3.0 (76.2)	Single	80,000	50,000	970
JCK-A-18R	390	2540	11.24 (285.5)	3.0 (76.2)	3.0 (76.2)	Double	80,000	50,000	1,430
JCK-A-24R	450	2540	11.24 (285.5)	3.0 (76.2)	3.0 (76.2)	Double	80,000	50,000	1,880
2400V — Bolt-On (See Figures 2 & 3)									
JCK-B-30	25	2540	14.18 (360.2)	12.81 (325.4)	-	Single	80,000	50,000	90
JCK-B-2R	70	2540	14.18 (360.2)	12.81 (325.4)	-	Single	80,000	50,000	170
JCK-B-3R	100	2540	14.18 (360.2)	12.81 (325.4)	-	Single	80,000	50,000	245
JCK-B-4R	130	2540	14.18 (360.2)	12.81 (325.4)	-	Single	80,000	50,000	340
JCK-B-5R	150	2540	14.18 (360.2)	12.81 (325.4)	-	Single	80,000	50,000	430
JCK-B-6R	170	2540	14.18 (360.2)	12.81 (325.4)	-	Single	80,000	50,000	500
JCK-B-9R	200	2540	14.18 (360.2)	12.81 (325.4)	-	Single	80,000	50,000	1,000
JCK-B-12R	230	2540	14.18 (360.2)	12.81 (325.4)	-	Single	80,000	50,000	1,250
JCK-B-18R	390	2540	14.18 (360.2)	12.81 (325.4)	3.56 (90.4)	Double	80,000	50,000	1,700
JCK-B-24R	450	2540	14.18 (360.2)	12.81 (325.4)	3.56 (90.4)	Double	80,000	50,000	1,210
2400V — Hermetically Sealed, For Use with Ampguard Motor Starters (See Figure 1)									
JCH-30	25	2540	10.81 (275.6)	3.0 (76.2)	3.0 (76.2)	Single	80,000	50,000	90
JCH-2R	70	2540	10.81 (275.6)	3.0 (76.2)	3.0 (76.2)	Single	80,000	50,000	170
JCH-3R	100	2540	10.81 (275.6)	3.0 (76.2)	3.0 (76.2)	Single	80,000	50,000	245
JCH-4R	130	2540	10.81 (275.6)	3.0 (76.2)	3.0 (76.2)	Single	80,000	50,000	340
JCH-5R	150	2540	10.81 (275.6)	3.0 (76.2)	3.0 (76.2)	Single	80,000	50,000	430
JCH-6R	170	2540	10.81 (275.6)	3.0 (76.2)	3.0 (76.2)	Single	80,000	50,000	500
JCH-9R	200	2540	10.81 (275.6)	3.0 (76.2)	3.0 (76.2)	Single	80,000	50,000	1,000
JCH-12R	230	2540	10.81 (275.6)	3.0 (76.2)	3.0 (76.2)	Single	80,000	50,000	1,250
JCH-18R	390	2540	10.81 (275.6)	3.0 (76.2)	3.0 (76.2)	Double	80,000	50,000	1,700
JCH-24R	450	2540	10.81 (275.6)	3.0 (76.2)	3.0 (76.2)	Double	80,000	50,000	2,100
4800V (See Figure 1)									
JCL-2R	70	5080	15.76 (400.3)	3.0 (76.2)	3.0 (76.2)	Single	80,000	50,000	165
JCL-3R	100	5080	15.76 (400.3)	3.0 (76.2)	3.0 (76.2)	Single	80,000	50,000	220
JCL-4R	130	5080	15.76 (400.3)	3.0 (76.2)	3.0 (76.2)	Single	80,000	50,000	320
JCL-5R	150	5080	15.76 (400.3)	3.0 (76.2)	3.0 (76.2)	Single	80,000	50,000	410
JCL-6R	170	5080	15.76 (400.3)	3.0 (76.2)	3.0 (76.2)	Single	80,000	50,000	480
JCL-9R	200	5080	15.76 (400.3)	3.0 (76.2)	3.0 (76.2)	Single	80,000	50,000	720
JCL-12R	230	5080	15.76 (400.3)	3.0 (76.2)	3.0 (76.2)	Single	80,000	50,000	970
JCL-18R	390	5080	15.76 (400.3)	3.0 (76.2)	3.0 (76.2)	Double	80,000	50,000	1,430
JCL-24R	450	5080	15.76 (400.3)	3.0 (76.2)	3.0 (76.2)	Double	80,000	50,000	1,880

• See previous page Figure 2 for single construction and Figure 3 for double construction information.
Recommended fuseclips: see page 91 - 1A0065, A3354730, 9078A67G04.

R-rated Fuses for Motor Circuit Protection

Catalog Numbers: R-Rated; Indoor/Enclosure

Catalog Numbers	Amp Ratings	Maximum Design Voltage	Dimensions - in (mm) A	B	C	Construction	Max Int. Cap. Amps (Asym.)	Amps (Sym.)	Min Int. Cap. Amps (Sym.)
4800V — With Westinghouse Ampguard Hookeye (See Figure 1)									
JCL-A-2R	70	5080	15.76 (400.3)	3.0 (76.2)	3.0 (76.2)	Single	80,000	50,000	165
JCL-A-3R	100	5080	15.76 (400.3)	3.0 (76.2)	3.0 (76.2)	Single	80,000	50,000	220
JCL-A-4R	130	5080	15.76 (400.3)	3.0 (76.2)	3.0 (76.2)	Single	80,000	50,000	320
JCL-A-5R	150	5080	15.76 (400.3)	3.0 (76.2)	3.0 (76.2)	Single	80,000	50,000	410
JCL-A-6R	170	5080	15.76 (400.3)	3.0 (76.2)	3.0 (76.2)	Single	80,000	50,000	480
JCL-A-9R	200	5080	15.76 (400.3)	3.0 (76.2)	3.0 (76.2)	Single	80,000	50,000	720
JCL-A-12R	230	5080	15.76 (400.3)	3.0 (76.2)	3.0 (76.2)	Single	80,000	50,000	970
JCL-A-18R	390	5080	15.76 (400.3)	3.0 (76.2)	3.0 (76.2)	Double	80,000	50,000	1,430
JCL-A-24R	450	5080	15.76 (400.3)	3.0 (76.2)	3.0 (76.2)	Double	80,000	50,000	1,880
4800V — Bolt-On (See Figures 2 & 3)									
JCL-B-30	30	5080	19.25 (488.9)	17.88 (454.1)	-	Single	80,000	50,000	95
JCL-B-2R	70	5080	19.25 (488.9)	17.88 (454.1)	-	Single	80,000	50,000	180
JCL-B-3R	100	5080	19.25 (488.9)	17.88 (454.1)	-	Single	80,000	50,000	270
JCL-B-4R	130	5080	19.25 (488.9)	17.88 (454.1)	-	Single	80,000	50,000	350
JCL-B-5R	150	5080	19.25 (488.9)	17.88 (454.1)	-	Single	80,000	50,000	450
JCL-B-6R	170	5080	19.25 (488.9)	17.88 (454.1)	-	Single	80,000	50,000	540
JCL-B-9R	200	5080	19.25 (488.9)	17.88 (454.1)	-	Single	80,000	50,000	700
JCL-B-12R	230	5080	19.25 (488.9)	17.88 (454.1)	-	Single	80,000	50,000	1,000
JCL-B-18R	390	5080	19.25 (488.9)	17.88 (454.1)	3.31 (84.1)	Double	80,000	50,000	1,450
JCL-B-24R	450	5080	19.25 (488.9)	17.88 (454.1)	3.31 (84.1)	Double	80,000	50,000	2,000
4800V — Hermetically Sealed, For Use with Ampguard Motor Starters (See Figure 1)									
JCG-30	30	5080	15.91 (404.1)	3.0 (76.2)	3.0 (76.2)	Single	80,000	50,000	95
JCG-2R	70	5080	15.91 (404.1)	3.0 (76.2)	3.0 (76.2)	Single	80,000	50,000	180
JCG-3R	100	5080	15.91 (404.1)	3.0 (76.2)	3.0 (76.2)	Single	80,000	50,000	270
JCG-4R	130	5080	15.91 (404.1)	3.0 (76.2)	3.0 (76.2)	Single	80,000	50,000	350
JCG-5R	150	5080	15.91 (404.1)	3.0 (76.2)	3.0 (76.2)	Single	80,000	50,000	450
JCG-6R	170	5080	15.91 (404.1)	3.0 (76.2)	3.0 (76.2)	Single	80,000	50,000	540
JCG-9R	200	5080	15.91 (404.1)	3.0 (76.2)	3.0 (76.2)	Single	80,000	50,000	700
JCG-12R	230	5080	15.91 (404.1)	3.0 (76.2)	3.0 (76.2)	Single	80,000	50,000	1,000
JCG-A-18R	390	5080	15.91 (404.1)	3.0 (76.2)	3.0 (76.2)	Double	80,000	50,000	1,450
JCG-A-24R	450	5080	15.91 (404.1)	3.0 (76.2)	3.0 (76.2)	Double	80,000	50,000	2,000
7200V — With Ampguard Hookeye (See Figure 1)									
JCR-A-2R	70	8300	15.85 (402.6)	3.0 (76.2)	3.0 (76.2)	Single	80,000	50,000	160
JCR-A-3R	100	8300	15.85 (402.6)	3.0 (76.2)	3.0 (76.2)	Single	80,000	50,000	250
JCR-A-4R	130	8300	15.85 (402.6)	3.0 (76.2)	3.0 (76.2)	Single	80,000	50,000	325
JCR-A-5R	150	8300	15.85 (402.6)	3.0 (76.2)	3.0 (76.2)	Single	80,000	50,000	390
JCR-A-6R	170	8300	15.85 (402.6)	3.0 (76.2)	3.0 (76.2)	Single	80,000	50,000	500
JCR-A-9R	200	7200	15.85 (402.6)	3.0 (76.2)	3.0 (76.2)	Single	80,000	50,000	750
JCR-A-12R	230	7200	15.85 (402.6)	3.0 (76.2)	3.0 (76.2)	Single	80,000	50,000	1,000
JCR-A-18R	390	7200	15.85 (402.6)	3.0 (76.2)	3.0 (76.2)	Double	80,000	50,000	1,450
JCR-A-24R	450	7200	15.85 (402.6)	3.0 (76.2)	3.0 (76.2)	Double	80,000	50,000	2,500
7200V — Bolt-On (See Figures 2 & 3)									
JCR-B-2R	70	8300	19.25 (488.9)	17.88 (454.1)	-	Single	80,000	50,000	160
JCR-B-3R	100	8300	19.25 (488.9)	17.88 (454.1)	-	Single	80,000	50,000	250
JCR-B-4R	130	8300	19.25 (488.9)	17.88 (454.1)	-	Single	80,000	50,000	325
JCR-B-5R	150	8300	19.25 (488.9)	17.88 (454.1)	-	Single	80,000	50,000	390
JCR-B-6R	170	8300	19.25 (488.9)	17.88 (454.1)	-	Single	80,000	50,000	500
JCR-B-9R	200	7200	19.25 (488.9)	17.88 (454.1)	-	Single	80,000	50,000	750
JCR-B-12R	230	7200	19.25 (488.9)	17.88 (454.1)	-	Single	80,000	50,000	1,000
JCR-B-18R	390	7200	19.25 (488.9)	17.88 (454.1)	3.31 (84.1)	Double	80,000	50,000	1,450
JCR-B-24R	450	7200	19.25 (488.9)	17.88 (454.1)	3.31 (84.1)	Double	80,000	50,000	2,500

Recommended fuseclips: see page 91 - 1A0065, A3354730, 9078A67G04.

Data Sheet: 6001

British Standard Dimensioned IEC Fuses for Motor Circuit Protection

The Cooper Bussmann range of motor fuses are designed to meet the specific requirements necessary for motor protection. During the starting cycle of direct on-line motors, the fuse elements will reach a considerably higher temperature than during normal operation; (this is due to the high amount of current the motor will draw as it starts, typically, six times its normal load current value). This results in expansion and contraction of the fuse elements and could cause premature operation of the fuse.

Cooper Bussmann motor fuses encompass an advanced design to minimize this effect. This therefore, negates the need to over specify the fuse rating due to high values of motor starting current.

Cooper Bussmann motor fuses operate extremely quickly under heavy fault currents, resulting from the time / current characteristic. Low power dissipation ensures low temperature rise, important in multi-tier starters for example. Switching (arc), voltages are lower than permitted values, therefore, 5.5kV fuses are also suitable for 4.8kV and 2.4kV circuits.



Table of Ratings

Basic Cat. Number	Volts	Breaking Capacity	Amp Ratings	Dimensions - in (mm)		Dimensional Standard
				Length	Diameter	
3.6WJON6	3.6kV	50kA	5, 6.3, 10, 16, 20, 25, 31.5, 40, 50	7.56 (192)	1.4 (35.6)	BS 2692 (TA1) Interchangeable with GEC type K2 PA
3.6WDOH6	3.6kV	50kA	50, 63, 80, 100, 125	7.56 (192)	2 (50.8)	BS 2692 (TA1) or DIN 43625
3.6WFOH6	3.6kV	50kA	160, 200	7.56 (192)	3 (76.2)	BS 2692 (TA1) or DIN 43625
3.6WDLSJ	3.6kV	50kA	50, 63, 80, 100, 125	11.5 (292.1)	2 (50.8)	DIN 43625
3.6WFLSJ	3.6kV	50kA	160, 200	11.5 (292.1)	3 (76.2)	DIN 43625
3.6WDFHO	3.6kV	50kA	50, 63, 80, 100, 125	10 (254)	2 (51)	BS 2692 (TA2)
3.6WFFHO	3.6kV	50kA	160, 200	10 (254)	3 (76.2)	BS 2692 (TA2)
3.6WKFHO	3.6kV	50kA	250, 315, 355, 400	10 (254)	3 (76.2)	BS 2692 (TA2)
5.5VFNHA	5.5kV	60kA	2R-6R	15.86 (402.8)	3 (76.2)	ANSI R-rated
5.5VKNHA	5.5kV	60kA	9R-24R	15.86 (402.8)	3 (76.2)	ANSI R-rated
7.2WFNHO	7.2kV	40kA	25, 31.5, 40, 50, 63, 80, 100, 125, 160	15.86 (402.8)	3 (76.2)	BS 2692 (TA4)
7.2WKNHO	7.2kV	40kA	200, 224, 250, 315	15.86 (402.8)	3 (76.2)	BS 2692 (TA4)
7.2WFMSJ	7.2kV	63kA	25, 31.5, 40, 50, 63, 80, 125, 160	17.40 (442)	3 (76.2)	DIN 43625
7.2WKMSJ	7.2kV	63kA	200, 224, 250, 315, 355	17.40 (442)	3 (76.2)	DIN 43625

Catalog Number Build-A-Code

kV	Basic Catalog Number	Amps
_ _ _	_ _ _ _ _	_ _ _

DIN Dimensioned IEC Fuses for Transformer Protection

DIN Dimension Fuses
To Spec. DIN 43625



Specifications
Catalog Symbol: See Basic Catalog Numbers table.

Description: DIN dimension fuses to Specification DIN 43625 covering current-limiting fuses with performance in compliance with IEC 60282-1. These are in accordance with the R10 and, in some cases, the R20 series of preferred numbers.

Dimensions: See Catalog Numbers table.

Catalog Number Build-A-Code

kV	Basic Catalog Number	Amps
_ _ _	_ _ _ _ _	_ _ _

Volts: — See voltage associated with the Basic Catalog Numbers in the table.

Amps: — See amp rating associated with the Basic Catalog Numbers in the table.

IR: — See IR associated with the Basic Catalog Numbers in the table.

Agency Information: Comply with DIN dimensional standard DIN 43625, VDE 0670 part 4, VDE 0670 part 40Z and with IEC 60282-1 (2005).

Features and Benefits
- DIN dimensioned for retrofitting in existing hardware
- Open fuse indicator for ease in troubleshooting
- Designed for use in IEC equipment

Typical Applications
- Medium Voltage IEC designed equipment

Catalog Numbers

kV	Catalog Numbers	Amp Ratings	Dimensions - in (mm) Diameter x Length	IR RMS Sym
3.6	3.6ADOSJ(amp)	6.3, 10, 16, 20, 25, 31.5, 40	2.00 x 7.56 (51 x 192)	40kA
	3.6WDOSJ(amp)	50, 63, 80, 100, 125	2.00 x 7.56 (51 x 192)	50kA
	3.6WFOSJ(amp)	160, 200	3.00 x 7.56 (76 x 192	
	3.6ADLSJ(amp)	25, 40	2.00 x 11.50 (51 x 292)	
	3.6WDLSJ(amp)	50, 63, 80, 100, 125	2.00 x 11.50 (51 x 292)	
	3.6WFLSJ(amp)	160, 200	3.00 x 11.50 (76 X 292)	
	3.6WKLSJ(amp)	250, 315, 400	3.00 x 11.50 (76 X 292)	
7.2	7.2TDLSJ(amp)	6.3, 10, 16, 20, 25, 31.5, 40, 50, 63	2.00 x 11.50 (51 x 292)	40kA
	7.2TFLSJ(amp)	80, 100, 125, 160	3.00 x 11.50 (76 x 292)	
	7.2WKMSJ(amp)	200, 225, 250, 315, 355	3.00 x 17.41 (76 x 442)	
12	12TDLEJ(amp)	6.3, 10, 16, 20, 25, 31.5, 40, 50, 63	2.00 x 11.50 (51 x 292)	63kA
	12THLEJ(amp)	80, 100	2.52 x 11.50 (64 x 292)	
	12TKLEJ(amp)	125	3.00 x 11.50 (76 x 292)	
	12TXLEJ(amp)*	160, 200	3.50 x 11.50 (88 x 292)	
17.5	17.5TDLSJ(amp)*	6.3, 10, 16, 20, 25, 31.5, 40	2.00 x 11.50 (51 x 292)	35.5kA
	17.5TFLSJ(amp)*	50	3.00 x 11.50 (76 x 292)	
	17.5TDMEJ(amp)	6.3, 10, 16, 20, 25, 31.5, 40, 50, 63	2.00 x 17.41 (51 x 442)	50kA
	17.5THMEJ(amp)	80, 100	2.52 x 17.41 (64 x 442)	
	17.5TKMEJ(amp)	125	3.00 x 17.41 (76 x 442)	
24	24TDMEJ(amp)	6.3, 10, 16, 20, 25, 31.5, 40, 50	2.00 x 17.41 (51 x 442)	50kA
	24THMEJ(amp)	63	2.52 x 17.41 (64 x 442)	
	24TFMEJ(amp)	80, 100*[1]	3.00 x 17.41 (76 x 442)	
	24TXMEJ(amp)*	125[2], 160	3.46 x 17.41 (88 x 442)	31.5kA
36	36TDQSJ(amp)	3.15[3], 6.3, 10, 16, 20, 25	2.00 x 21.16 (51 x 537)	35.5kA
	36TFQSJ(amp)	31.5, 40, 50	3.00 x 21.16 (76 x 537)	
	36TXQEJ(amp)*	63	3.46 x 21.16 (88 x 537)	20kA

Recommended fuseclips for DIN style fuses – 270303, A3354745 see page 91.
*Not compliant with VDE 0670, part 402.
[1]-IR RMS Sym is 63kA
[2]-IR RMS Sym is 40kA
[3]-IR RMS Sym is 20kA

Dimensions - In (mm)

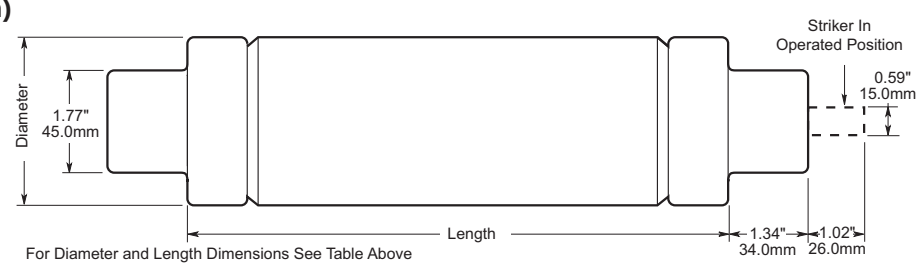

Potential Transformer Fuses

AB, AM and CAV



Specifications

Description: British Standard VT fuses with low current ratings for use in voltage transformers or operating transformers to provide isolation of the associated system in the event of faults in the transformer circuit.

Dimensions: See Basic Catalog Numbers table.

Ratings:

E-Rated: — See single asterisk in Basic Catalog Numbers table

Volts: — 3.6-38kV (See Basic Catalog Numbers table)

Amps: — 2-15A (See Basic Catalog Numbers table)

IR: — 25-80kA (See Basic Catalog Numbers table)

Agency Information: BS2692-1 and IEC60282-1

Features and Benefits

- Physically dimensioned for retrofitting in existing hardware.
- Space saving size.

Typical Applications

- Medium Voltage Potential Transformers
- Small Medium Voltage Service Transformers

Basic Catalog Numbers for "AB" & "AM" Series

Basic Cat. Numbers	Volts	Amp Ratings	Type	Dimensions - in (mm) Length	Diameter	IR
3.6ABWNA	3.6kV	3.15, 6.3	AB	5.6 (142.2)	1 (25.4)	50KA
3.6ABCNA	3.6kV	3.15, 6.3, 10	AB	7.69 (195.3)	1 (25.4)	50KA
5.5ABWNA*	5.5kV	0.5, 1, 2, 3, 5	AB	5.6 (142.2)	1 (25.4)	50KA
5.5AMWNA*	5.5kV	0.5, 1.0, 2.0, 3.0, 4.0, 5.0	AM	5.6 (142.2)	0.81 (20.6)	50KA
7.2ABWNA	7.2kV	3.15, 6.3	AB	5.6 (142.2)	1 (25.4)	45KA
7.2ABCNA	7.2kV	3.15, 6.3	AB	7.69 (195.3)	1 (25.4)	45KA
12ABCNA	12.0kV	3.15	AB	7.69 (195.3)	1 (25.4)	45KA
15.5ABFNA	15.5kV	3.15	AB	10.00 (254)	1 (25.4)	32KA
17.5ABGNA	17.5kV	3.15	AB	14.13 (358.9)	1 (25.4)	35KA
24ABGNA	24.0kV	3.15	AB	14.13 (358.9)	1 (25.4)	25KA
36ABGNA**	36.0kV	3.15	AB	14.13 (358.9)	1 (25.4)	31.5KA

Recommended fuse clip for 1 diameter fuses – A3354705.

Basic Catalog Numbers for "CAV" Series

Basic Cat. Number	Volts	Amp Ratings	Dimensions - in (mm) Length	Diameter	IR
3.6CAV	3.6kV	2	8.66 (220)	1.63 (41.4)	50KA
5.5CAV*	5.5kV	15	7.375 (187.3)	1.63 (41.4)	63KA
5.5CAVH*	5.5kV	0.5, 1, 2	7.375 (187.3)	1.63 (41.4)	63KA
7.2CAV	7.2kV	2, 4, 6, 10	8.66 (220)	1.63 (41.4)	63KA
12CAV	12kV	2	8.66 (220)	1.63 (41.4)	40KA
15.5CAV*	15.5kV	0.5, 1, 2, 3, 5, 7	12.87 (326.9)	1.63 (41.4)	80KA
15.5CAVH*	15.5kV	0.5, 1, 2	12.87 (326.9)	1.63 (41.4)	80KA
17.5CAV	17.5kV	2, 4, 6, 10	8.66 (220)	1.63 (41.4)	40KA
24CAV	24kV	2, 3, 4	13.39 (340.1)	1.63 (41.4)	40KA
36CAV	36kV	2, 4	17.32 (439.9)	1.63 (41.4)	40KA
36CAVH	36kV	2	17.32 (439.9)	1.63 (41.4)	40KA
38CAV*	38kV	4	17.32 (439.9)	1.63 (41.4)	40KA
38CAVH*	38kV	0.5, 1, 2	17.32 (439.9)	1.63 (41.4)	40KA

Type CAVH are fitted with a striker pin for indication.
* E-Rated fuses
**For clean indoor applications only.

Catalog Number Build-A-Code

kV	Basic Catalog Number	Amps
_ _ _	_ _ _ _ _	_ _ _

Recommended Fuse Clips: 1" dia. - A3354705, 1.63" dia. - 1A0835, .819 dia. - 1A1837
Contact Cooper Bussmann for complete specifications on potential transformer fuses

British Standard IEC Fuses for Use in Oil Filled Distribution Switchgear

OEFMA



Specifications

Description: BS 2692-1 medium voltage fuses for use on the primary circuit of three-phase 50Hz transformers in oil field switchgear. Fitted with powerful pyrotechnic striker pin.

Ratings:

Volts: — 3.6-24kV

Amps: — 6.3-200A

IR: — 25-50kA (See Catalog Number table below)

Agency Information: Fuses comply with IEC 60282-1, BS2692-1 and ESI Standard 12-8. 7.2 and 12kV fuses tested at highest system voltage and approved by the UK Electricity Association approvals panel.

Featues and Benefits

- Physically sized for replacement of British Standard fuse links

Typical Applications

- Medium Voltage BS Designed Equipment

Code Number Reference

O — M — A

Type

O = Oil tight

Diameter

E = 63.5mm

H = 63.5mm

L = 63.5mm

Length

F = 254mm

G = 359mm

Striker

M = As specified in BS 2692 table 11

Tags

A = None (plain caps)

Dimensions:

Current-limiting fuse for use in oil switchgear

Fuse types: OEF, OEG, OHF, OHG, OLG

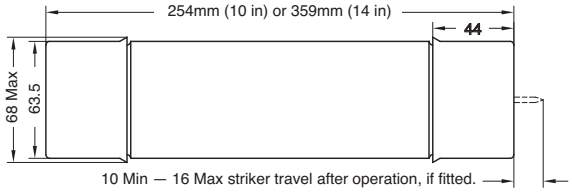

Catalog Numbers

Transformer	Catalog Numbers/Transformer Primary Voltage			
kVA	3.3kV	6.6kV	11kV/ESI 12-8 Ref.	13.8kV
200	3.6OEFMA63	12OEFMA31.5	12OEFMA25/01	15.5OEFMA16
250	3.6OEFMA80	12OEFMA40	12OEFMA25/—	15.5OEFMA20
300/315	3.6OEFMA100	12OEFMA50	12OEFMA31.5/02	15.5OEFMA25
400	3.6OEFMA125	12OEFMA63	12OEFMA40/—	15.5OEFMA31.5
500	3.6OEFMA160	12OHFMA71	12OEFMA50/03	15.5OEFMA40
630	3.6OEFMA200	7.2OEFMA100	12OEFMA63/—	15.5OEFMA50
750/800	3.6OLGMA250	7.2OHGMA125	12OHFMA80/04	15.5OEFMA63
1000	3.6OLGMA250*	7.2OHGMA140	12OHGMA90**/05	15.5OHGMA71
1250	—	7.2OHGMA160*	12OHGMA100/—	15.5OHGMA90
1600	—	—	12OLGMA125*/—	15.5OLGMA100*

This Catalog Number selection table is based upon the following criteria:

1. Withstand against magnetizing inrush current taken as 12 times full-load current for 0.1 second.
2. Withstand against 150% permissible overload current. Recommendations marked with asterisks have the following significance:-
   *Limited to permissible overloads of 130%.
   **Permits use of a 12kV OHFMA 80A fuse with a 100kVA transformer where permissible overload does not exceed 130%.
3. For 6.6kV systems, 12kV fuses are recommended where possible in the interests of standardization.
4. Wherever possible, 10 inch long FO1 fuses are offered rather than equivalent 14 inch FO2 types.
5. The above recommendations are not generally applicable to transformers feeding motor circuits with starting currents in excess of the transformer full load current. In this event, please consult Cooper Bussmann.

Catalog Numbers

Basic Cat. Number	Voltage	Dimensional Ref. BS 2692	Amp Ratings	Breaking Capacity (kA)
3.6OEFMA	3.6kV	FO1	6.3, 10, 16, 20, 25, 31.5, 40, 50, 63, 80, 100, 125, 160, 200	50
3.6OEGMA	3.6kV	FO2	100, 125, 160, 200	50
3.6OLGMA	3.6kV	FO2	250	50
7.2OEFMA	7.2kV	FO1	80, 100, 112	45
7.2OHGMA	7.2kV	FO2	125, 140, 160	45
12OEFMA	12.0kV	FO1	6.3, 10, 16, 20, 25, 31.5, 40, 50, 63	40
12OHFMA	12.0kV	FO1	71, 80	40
12OHGMA	12.0kV	FO2	6.3, 10, 16, 20, 25, 31.5, 40, 50, 63, 71, 80, 90, 100	40
12OLGMA	12.0kV	FO2	125	40
15.5OEFMA	15.5kV	FO1	6.3, 10, 16, 20, 25, 31.5, 40, 50, 63	40
15.5OHGMA	15.5kV	FO2	71, 80, 90	40
15.5OLGMA	15.5kV	FO2	100	40
17.5OHGMA	17.5kV	FO2	6.3, 10, 16, 20, 25, 31.5, 40, 50, 63, 80	35
24OEGMA	24.0kV	FO2	6.3, 10, 16, 20, 25, 31.5, 40, 50	25

Contact Cooper Bussmann for complete specifications on medium voltage fuses.

Catalog Number Build-A-Code

kV	Basic Catalog Number	Amps
_ _ _	_ _ _ _ _	_ _ _

Fast-acting Fuses

HVA, HVB, HVJ, HVL, HVR, HVT, HVU, HVW & HVX



Specifications

Description: Medium voltage, non-time delay, fast-acting fuses.

Dimensions: See Basic Catalog Numbers table.

Ratings:

Volts: — 1-10kV (See Basic Catalog Numbers table)

Amps: — 1/16-10A (See Basic Catalog Numbers table)

Features and Benefits

- Physical size varies with electrical rating of fuse to prevent over-fusing.
- Space saving size.

Typical Applications

- Medium Voltage Instrument Protection
- Medium Voltage Circuit Protection

Test Specifications

Basic Catalog Numbers	Load / Opening Time
HVA, HVB, HVJ, HVL	110% / 4 Hours (min) 135% / 1 Hour (max)
HVR, HVT, HVU, HVW, HVX	100% / 4 Hours (min) 150% / 1 Hour (max)



Fuse blocks: 4528, 4529, 4530 & 2960

Voltage Rating: 1000 to 10,000V

Basic Catalog Numbers	Fuse Block Catalog Number	Fuse Clip Catalog Number
HVA, HVR	4528	5960
HVB, HVT	4529	5960
HVJ, HVU	4530	4180
HVL, HVX	2960	4180

Use #8 screws on blocks 4528 and 4529.
Use #10 screws on blocks 4530 and 2960.

Basic Catalog Number	kV	Amp Ratings	Maximum S.C.	Dimensions - in (mm) Diameter	Length
HVA	1	1/16, 1/10, 1/8, 2/10, 1/4, 3/10, 3/8, 1/2, 3/4, 1, 1 1/2, 2, 3, 4, 6, 10	20kW dc/30kVA ac	0.41 (10.4)	3 (76.1)
HVB	2.5	1/2, 3/4, 1, 1 1/2, 2, 3	20kW dc/30kVA ac	0.41 (10.4)	4.5 (114.2)
HVJ	5	1/16, 1/8, 1/4, 1/2, 3/4, 1 1/2, 2, 4, 6, 10	20kW dc/30kVA ac	0.81 (20.6)	5 (126.9)
HVL	10	1/16, 1/8, 1/4, 1/2, 1, 1 1/2, 2, 3	20kW dc/30kVA ac	0.81 (20.6)	10 (254)
HVR	1	1/2, 1, 2, 3, 4, 5	kVA-500 ac only	0.41 (10.4)	3 (76.2)
HVW	1.2	1, 2, 3, 4, 5, 8	kVA-12,000 ac only	0.41 (10.4)	2.25 (57.1)
HVT	2.5	1/2, 1, 2, 3, 5	kVA-1250 ac only	0.41 (10.4)	4.5 (114.2)
HVU	5	1/2, 1, 2, 3, 4, 5	kVA-2500 ac only	0.81 (20.6)	5 (126.9)
HVX	10	1/2, 1, 3, 5	kVA-5,000 ac only	0.41 (10.4)	10.0 (253.8)

Catalog Number Build-A-Code

Basic Catalog Number _ _ _ _ _ Amps _ _ _

EEI-NEMA Type K & T and Type H & N

FL: Type H and EEI-NEMA Type K & T Fuses



Specifications

Description: Medium voltage fuses: Type H (high surge), EEI-NEMA Type K (fast-acting), EEI-NEMA Type T (slow-acting).

Ratings:

Amps: — 1-200A (See Catalog Numbers tables)

Features and Benefits

- Wide range of EEI-NEMA type fuse links for use in open fuse cutouts
- Voltage ratings up to 27kV.
- Can be coordinated with other overcurrent protective devices for sectionalizing to isolate feeder branches.

Typical Applications

- Medium Voltage Fused Cutouts

High-Surge Type H Fuses

High-surge, Type H fuses are manufactured in ratings of 1, 2, 3, 5, and 8A. They have been developed principally for primary fusing of small-sized transformers. Type H links are manufactured in the universal buttonhead design.

Type N Fuses

Type N fuses conform to previous NEMA standards and have been superseded by Type K and T links. Type N fuses are manufactured in the universal button design in ratings of 5 through 200A for use in NEMA standard dimensioned cutouts rated through 27kV.

Catalog Numbers

EEI-NEMA and High-Surge Universal Tin Element Fuses for Cutouts — Rated to 27kV

Non-Removable Button-Head For Standard Open or Enclosed Cutouts

Catalog Numbers

Type H (High Surge)	EEI-NEMA Type K (Fast)	EEI-NEMA Type T (Slow)	Amps
FL11H1	FL11K1	FL11T1	1
FL11H2	FL11K2	FL11T2	2
FL11H3	FL11K3	FL11T3	3
FL11H5	FL11K5	FL11T5	5
—	FL11K6	FL11T6	6
FL11H8	FL11K8	FL11T8	8
—	FL11K10	FL11T10	10
—	FL11K12	FL11T12	12
—	FL11K15	FL11T15	15
—	FL11K20	FL11T20	20
—	FL11K25	FL11T25	25
—	FL11K30	FL11T30	30
—	FL11K40	FL11T40	40
—	FL11K50	FL11T50	50
—	FL11K65	FL11T65	65
—	FL11K80	FL11T80	80
—	FL11K100	FL11T100	100
—	FL11K140	FL11T140	140
—	FL11K200	FL11T200	200

Removable Button-Head For Cutouts Requiring Removable-Button Links

Catalog Numbers

EEI-NEMA Type K (Fast)	EEI-NEMA Type T (Slow)	Amps
FL3K1	FL3T1	1
FL3K2	FL3T2	2
FL3K3	FL3T3	3
FL3K5	FL3T5	5
FL3K6	FL3T6	6
FL3K8	FL3T8	8
FL3K10	FL3T10	10
FL3K12	FL3T12	12
FL3K15	FL3T15	15
FL3K20	FL3T20	20
FL3K25	FL3T25	25
FL3K30	FL3T30	30
FL3K40	FL3T40	40
FL3K50	FL3T50	50
FL3K65	FL3T65	65
FL3K80	FL3T80	80
FL3K100	FL3T100	100
FL3K140	FL3T140	140
FL3K200	FL3T200	200

Adapter-type removable-button links with ferrule adapter to convert to double-leader links are available in K and T types. Order by description.

EEI-NEMA Type K Universal Silver-Element Fuses for Cutouts — Rated through 27kV

Non-Removable Button-Head For Standard Open or Enclosed Cutouts

Catalog Numbers

EEI-NEMA Type K	Amps
FL12K8	8
FL12K10	10
FL12K12	12
FL12K15	15
FL12K25	25
FL12K50	50

BBU Boric Acid Fuses

BBU



Specifications

Description: Boric acid fuses for power transformers, feeder circuits, distribution transformers, metal-enclosed and pad-mounted switchgear

Construction: Principle parts of the replaceable BBU fuse unit are shown in the cross section views. A glass epoxy tube encloses the assembly containing the silver fuse element, arcing rod, boric acid cylinder and spring. Using a pure silver element and nichrome wire strain element makes the BBU less susceptible to failure caused by vibration, corona corrosion and fuse element aging. The components are housed in a fiberglass reinforced resin tube with plated copper contacts. BBU fuses can directly replace competitive equivalent units.



Element Melts | **Rod withdraws, elongating arc and vaporizing Boric Acid** | **Vapor quenches arc at first current zero**

Operation: The BBU fuse uses boric acid to create the de-ionizing action to interrupt the arc. At high temperatures, boric acid decomposes to produce a blast of water vapor and inert boric anhydride. Fault interruption is achieved by an arcing rod and a charged spring that elongate the arc through a boric acid chamber upon release by the fuse element to interrupt short circuits within one-half cycle and prevent the arc from re-striking after a current zero.

BBU End Fittings: BBU end fittings complete the electrical connection between the fuse unit and the fuse mounting. Positioned on the top and bottom of the fuse, unit end fittings can be used over again if they remain undamaged. They are completely interchangeable with other manufacturers' equivalent fuse units and mountings.

Indoor Fittings: The indoor end fittings are made of high-impact plastic and high-conducting copper alloy. The blown fuse indicator, located on the top end fitting, provides visual indication of a faulted fuse unit. When engaged into the mounting, the spring-loaded plastic mounting handle actuates the latch mechanism and readily accepts a hookstick to install or remove the assembled fuse unit.

The bottom indoor fitting is threaded to accept a muffler constructed of a plated steel housing, containing copper mesh screening, that absorbs and contains the noise and exhaust materials during a fault condition, and prevents contamination of indoor components and mechanisms located within the switchgear. Containment also prevents accidental flash-over from phase-to-phase or phase-to-ground by limiting airborne particles and gases.

BBU Melt Curve Constructions: The BBU fuse is offered in three constructions to meet specific melt curves for an application. The construction is designated in the Catalog Number suffix as follows;

- E (Standard)
- K (Fast), and
- SE (Slow)

The curves for the SE construction are less inverse and allow for more of a time-delay at high currents. Consult Cooper Bussmann for application assistance.

Ratings:

Volts: — The maximum voltage rating of the BBU fuse is the highest RMS voltage at which the fuse is designed to operate. Its dielectric withstand level corresponds to insulation levels of power class equipment, thus the name "power fuse." Maximum voltage ratings for BBU fuses are: 17kV, 27kV and 38kV.

Amps:— The continuous amp rating of a BBU fuse should equal or exceed the maximum load current where the fuse is applied. They are designed to carry their rated continuous current without exceeding the temperature rise outlined in NEMA and ANSI standards. The BBU is available with continuous current ratings up to 200 amps The current ratings carry an "E" designation as defined by ANSI and NEMA. For example, the current responsive element rated 100E amps or below will melt in 300 seconds at an RMS current within the range of 200 to 240 percent of the continuous current ratings. Above 100E amps, melting takes place in 600 seconds at an RMS current within the range of 220 to 264 percent of the continuous current rating.

IR:— BBU fuses have interrupting capabilities from 10kA to 14kA symmetrical.

Features and Benefits

- Voltage ratings of up to 38kV coupled with ratings to 200A provide a wide range of circuit protection.
- Time-current characteristics allow for easier coordination with downstream devices.
- Provides replacement of a variety of existing systems.

Typical Applications

- Power and Distribution Transformer Protection
- Medium Voltage Feeder Circuit Protection
- Distribution Transformers
- Medium Voltage Metal-enclosed Switchgear
- Medium Voltage Pad-mounted Switches

BBU Boric Acid Fuses for Indoor Use

Catalog Numbers*	Amps	Fuse Type	Voltage kV	Max Int. kA Sym	Catalog Numbers*	Amps	Fuse Type	Voltage kV	Max Int. kA Sym.	Catalog Numbers	Amps	Fuse Type	Voltage kV	Max Int. kA Sym.
BBU17-3K	3				BBU27-3K	3				BBU38-3K	3			
BBU17-6K	6				BBU27-6K	6				BBU38-6K	6			
BBU17-8K	8				BBU27-8K	8				BBU38-8K	8			
BBU17-10K	10				BBU27-10K	10				BBU38-10K	10			
BBU17-12K	12				BBU27-12K	12				BBU38-12K	12			
BBU17-15K	15				BBU27-15K	15				BBU38-15K	15			
BBU17-20K	20				BBU27-20K	20				BBU38-20K	20			
BBU17-25K	25	K	17	14	BBU27-25K	25	K	27	12.5	BBU38-30K	30	K	38	10
BBU17-30K	30				BBU27-30K	30				BBU38-40K	40			
BBU17-40K	40				BBU27-40K	40				BBU38-50K	50			
BBU17-50K	50				BBU27-50K	50				BBU38-65K	65			
BBU17-65K	65				BBU27-65K	65				BBU38-80K	80			
BBU17-80K	80				BBU27-80K	80				BBU38-100K	100			
BBU17-100K	100				BBU27-100K	100				BBU38-140K	140			
BBU17-140K	140				BBU27-140K	140				BBU38-200K	200			
BBU17-200K	200				BBU27-200K	200				BBU38-5E	5			
BBU17-5E	5				BBU27-5E	5				BBU38-7E	7			
BBU17-7E	7				BBU27-7E	7				BBU38-10E	10			
BBU17-10E	10				BBU27-10E	10				BBU38-13E	13			
BBU17-13E	13				BBU27-13E	13				BBU38-15E	15			
BBU17-15E	15				BBU27-15E	15				BBU38-20E	20			
BBU17-20E	20				BBU27-20E	20				BBU38-25E	25			
BBU17-25E	25				BBU27-25E	25				BBU38-30E	30			
BBU17-30E	30				BBU27-30E	30				BBU38-40E	40	E	38	10
BBU17-40E	40	E	17	14	BBU27-40E	40	E	27	12.5	BBU38-50E	50			
BBU17-50E	50				BBU27-50E	50				BBU38-65E	65			
BBU17-65E	65				BBU27-65E	65				BBU38-80E	80			
BBU17-80E	80				BBU27-80E	80				BBU38-100E	100			
BBU17-100E	100				BBU27-100E	100				BBU38-125E	125			
BBU17-125E	125				BBU27-125E	125				BBU38-150E	150			
BBU17-150E	150				BBU27-150E	150				BBU38-175E	175			
BBU17-175E	175				BBU27-175E	175				BBU38-200E	200			
BBU17-200E	200				BBU27-200E	200				BBU38-15SE	15			
BBU17-15SE	15				BBU27-15SE	15				BBU38-20SE	20			
BBU17-20SE	20				BBU27-20SE	20				BBU38-25SE	25			
BBU17-25SE	25				BBU27-25SE	25				BBU38-30SE	30			
BBU17-30SE	30				BBU27-30SE	30				BBU38-40SE	40			
BBU17-40SE	40				BBU27-40SE	40				BBU38-50SE	50			
BBU17-50SE	50				BBU27-50SE	50				BBU38-65SE	65	SE	38	10
BBU17-65SE	65	SE	17	14	BBU27-65SE	65	SE	27	12.5	BBU38-80SE	80			
BBU17-80SE	80				BBU27-80SE	80				BBU38-100SE	100			
BBU17-100SE	100				BBU27-100SE	100				BBU38-125SE	125			
BBU17-125SE	125				BBU27-125SE	125				BBU38-150SE	150			
BBU17-150SE	150				BBU27-150SE	150				BBU38-175SE	175			
BBU17-175SE	175				BBU27-175SE	175				BBU38-200SE	200			
BBU17-200SE	200				BBU27-200SE	200								

*** BBU Melt Curve Constructions:** The BBU fuse is offered in three constructions to meet specific melt curves for an application. The construction is designated in the Catalog Number suffix: E (Standard), K (Fast) and SE (Slow). Contact Cooper Bussmann for application details.

Application Notes

Low currents, usually referred to as overload currents, must be considered as BBU fuses have a rather low thermal capacity. They cannot carry overloads of the same magnitude/duration as motors and transformers of equal continuous currents. For this reason, the BBU fuse must be sized with the full load current in mind so the fuse does not open on otherwise acceptable overloads and inrush conditions. Coordination should be considered to help determine what type of fuse is applied. The BBU fuse interrupts at a natural current zero in the current wave and allows a minimum of a half-cycle of fault current to flow before the fault is cleared. The time-current characteristics associated with a BBU fuse has a rather gradual slope making it easier to coordinate with downstream equipment. In addition, the BBU is ideal for higher voltage (up to 38kV) and high current applications (up to 200A). It is important to examine the minimum melting and total clearing time-current characteristics of this fuse.

End Fitting Detail

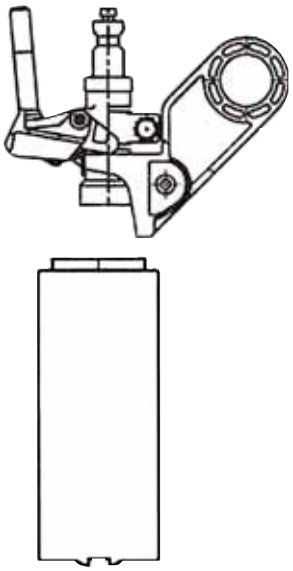

Note: Muffler can be ordered separately. Order Catalog number BBU-MFLR.

Data Sheet: 1123

Fuseclips for Medium & High Voltage Fuses

Recommended Fuseclips for Medium Voltage Fuses

Catalog Numbers	Fuse Diameter - in (mm)	Clip Dimensions (in)						
		A	B	C	D	E	F	G
A3354710	2 (50.8)	3.749	1.979	2.009	1.189	4.539	1.509	0.399
A3354730	3 (76)	4.139	2.449	3.009	1.189	5.639	1.509	0.399
A3354745	1.77 (45)	3.50	2.50	1.77	1.19	4.50	1.50	0.38

Fuseclips are for single barrel applications only. Are not sold in pairs.

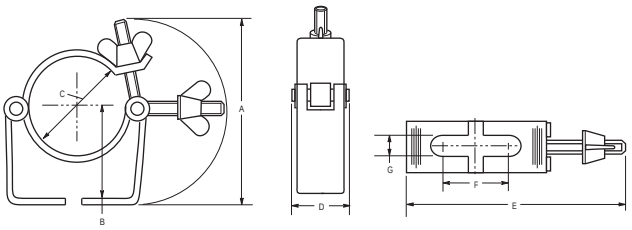

1A0065
3" Diameter Clip

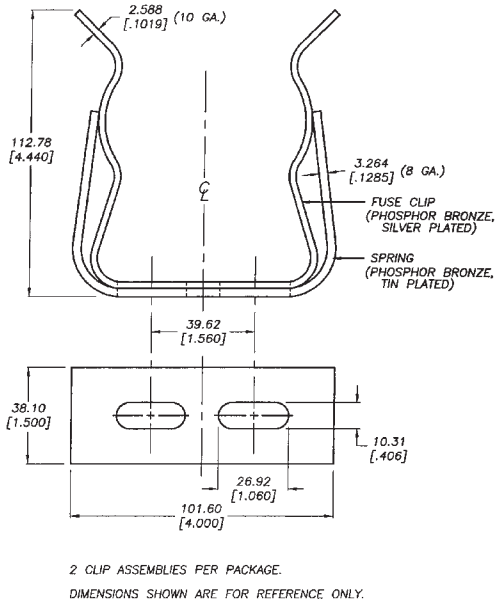

2 CLIP ASSEMBLIES PER PACKAGE.
DIMENSIONS SHOWN ARE FOR REFERENCE ONLY.

270303
DIN Fuseclip

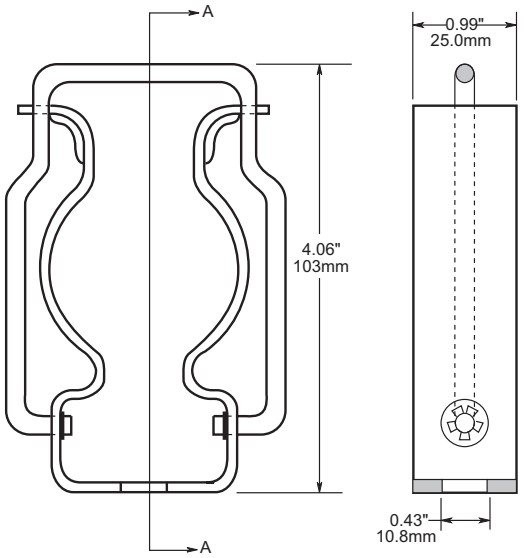

9078A67G04
3" Diameter Clip

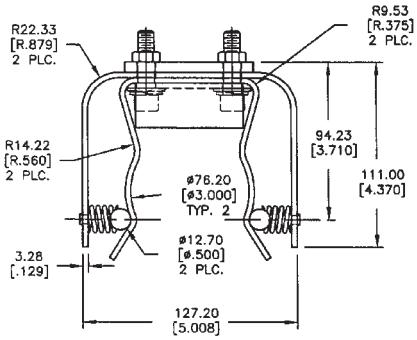

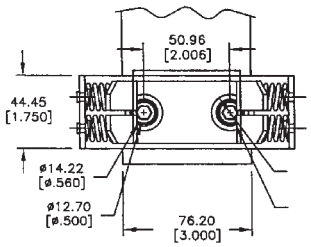

2 Cup assemblies per package.
Dimensions shown are for reference only.

COOPER Bussmann





High Speed Fuses

Extensive Selection to Deliver Precise Protection to Critical Loads

COOPER Bussmann

Mouser Electronics

Authorized Distributor

Click to View Pricing, Inventory, Delivery & Lifecycle Information:

Eaton:

JCU-750E JCY-80E JCX-100E JCX-50E JCU-400E JCU-175E JCX-20E JCX-3E JCY-7E JCZ-80E JCY-65E JCY-3E JCZ-30E JCX-200E JCZ-100E JDZ-200E JCU-200E JCZ-20E JCZ-150E JCU-450E JCX-1/2E JCY-200E JCU-65E JCX-30E JCX-15E JCX-350X JCZ-25E JDZ-125E JCY-25E JCU-350E JDZ-100E JCZ-200E JCU-50E JCZ-65E JCX-10E JCU-125E JCY-450E JCX-7E JCY-20E JCU-20E JCY-5E JCX-80E JCY-40E JCX-5E JCX-40E JCY-300E JCU-100E JCX-65E JCU-250E JCY-10E JCY-1E JCU-600E JCZ-15E JCU-300E JDZ-250E JDZ-175E JCX-400X JCY-250E JCU-40E JCX-125E JCU-30E JDZ-50E JDZ-300E JCY-50E JCY-350E JCY-30E JCU-10E JCX-1E JCU-80E JDZ-150E JCY-225E JCZ-40E JDZ-350E JCX-25E JCX-150E JCY-100E JCY-400E JCX-2E JCZ-125E JCU-150E JCY-15E JCX-450X JDZ-40E JCU-15E JCU-25E JCY-1/2E JCY-2E JCX-225E JCZ-50E JCY-125E JCY-150E