HPV single-pole, non-serviceable in-line PV fuse holder and fuse assembly: 1-20 A, 1000 Vdc / 4 A, 1500 Vdc



RoHS 2011/65/EU

Catalog symbols:

- HPV-DV-(amp)A (1-20 A, 1000 Vdc)
- HPV-D15V-4A (4 A, 1500 Vdc)

Description:

Eaton's Bussmann™ series of HPV single-pole, non-serviceable photovoltaic in-line fuse holders/ assemblies are available in an IP67 dust-tight and temporary water immersion resistant insulating boot for use in photovoltaic wire harnesses.

Final assembly of conductors (customer supplied), insulating boots and labeling to be performed by customer following the directions contained in assembly guide no. 3A1963.

Ratings

- Volts
  - 1000 Vdc
  - 1500 Vdc (HPV-D15V-4A only)
- Amps
  - 1-20 A
- IR 33 kA

Agency information

- UL® Listed to 4248-1 and 4248-19. File E348242,
- CSA® Component Acceptance, Class 6225 30, File 47235
- CE, RoHS compliant, IP20 finger-safe, IP67

Terminals/conductors

- Crimp connection for single, stranded 75°C/90°C Cu 12-10 AWG PV wire

Boot material

- UL 5VA flammability resistant rated elastomer. UV resistant to UL F1 suitable for outdoor use.

Operating and storage temperature range

- -40°C to +90°C

Recommended tools

- Sta-Kon™ terminal crimping tool, catalog #ERG4002
- Multi-Contact assembly tool, catalog #PV-RWZ with PV-KOI+II and PV-KOIII tapered spindles

Packing

Bulk packed in cartons, 180 fuse assemblies per carton. Carton weight 19.3 lbs (8.7 kg)

Fuse assemblies poly bagged with PV fuse element, two insulating boots (lineside and loadside), and one pressure sensitive label to be applied on outside after complete assembly to the wire harness.

Catalog numbers (amps) and fuse elements*

HPV catalog no.	Fuse element cat. no.	Amps
1000 Vdc		
HPV-DV-1A	PV-1A10F-CT	1
HPV-DV-2A	PV-2A10F-CT	2
HPV-DV-2.5A	PV-2.5A10F-CT	2.5
HPV-DV-3A	PV-3A10F-CT	3
HPV-DV-3.5A	PV-3.5A10F-CT	3.5
HPV-DV-4A	PV-4A10F-CT	4
HPV-DV-5A	PV-5A10F-CT	5
HPV-DV-6A	PV-6A10F-CT	6
HPV-DV-8A	PV-8A10F-CT	8
HPV-DV-10A	PV-10A10F-CT	10
HPV-DV-12A	PV-12A10F-CT	12
HPV-DV-15A	PV-15A10F-CT	15
HPV-DV-20A	PV-20A10F-CT	20
1500 Vdc		
HPV-D15V-4A	P15V-4A10F-CT	4

* For fuse specifications and derating curves see data sheet no. 10121 at Eaton.com/bussmannseries.

For assistance with design, installation or assembly related to this product, call Application Engineering at 855-287-7626, Monday-Friday, 7:00 a.m. to 5:00 p.m. Central Time, or email FuseTech@Eaton.com.

Powering Business Worldwide

HPV single-pole, non-serviceable in-line PV fuse holder and fuse assembly: 1-20 A, 1000 Vdc / 4 A, 1500 Vdc

Dimensions - mm:

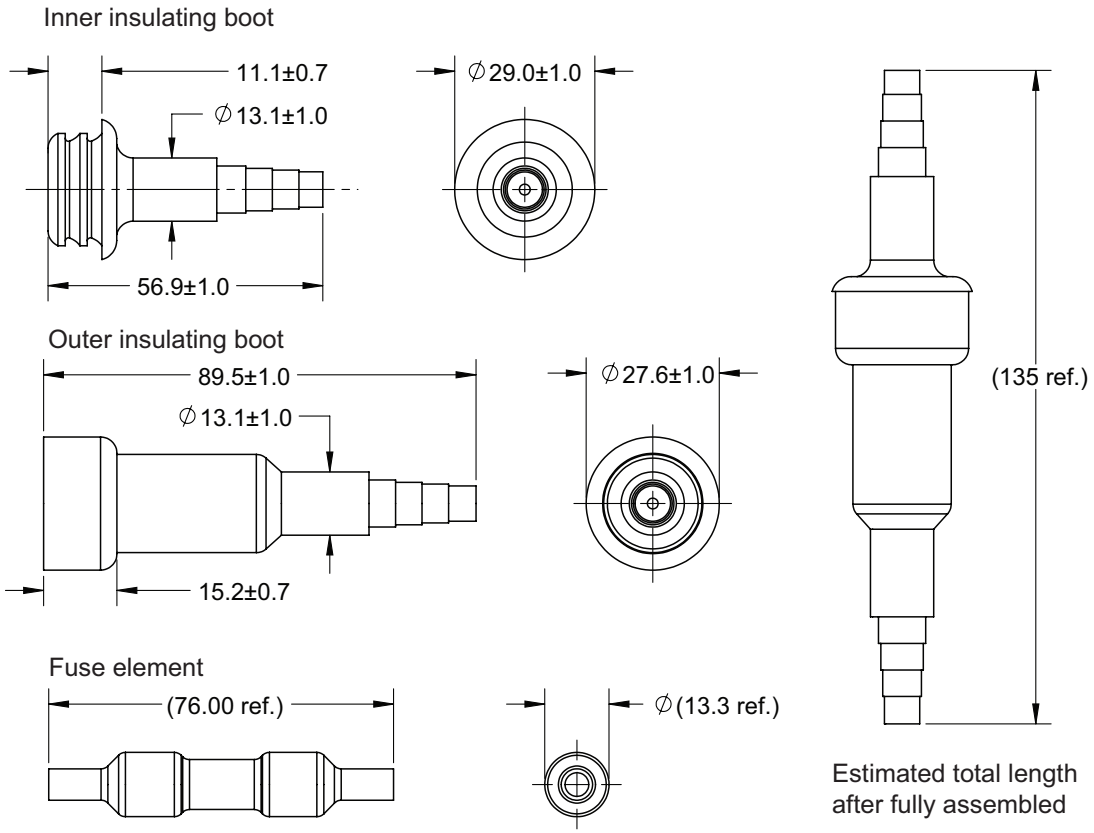

Catalog number system:

HPV - DV - XXA

Series	Voltage	Amps
HPV	**DV = 1000 DC volts 1- 20 A** **D15V = 1500 DC volts 4 A only)**	**XX** = 1, 2, 2.5, 3, 3.5, 4, 5, 6, 8, 10, 12, 15, 20

The only controlled copy of this data sheet is the electronic read-only version located on the Eaton network drive. All other copies of this document are by definition uncontrolled. This bulletin is intended to clearly present comprehensive product data and provide technical information that will help the end user with design applications. Eaton reserves the right, without notice, to change design or construction of any products and to discontinue or limit distribution of any products. Eaton also reserves the right to change or update, without notice, any technical information contained in this bulletin. Once a product has been selected, it should be tested by the user in all possible applications.

Eaton
1000 Eaton Boulevard
Cleveland, OH 44122
Eaton.com

Bussmann Division
114 Old State Road
Ellisville, MO 63021
United States
Eaton.com/bussmannseries

© 2018 Eaton
All Rights Reserved
Printed in USA
Publication No. 2157 — BU-SB14182
August 2018

Eaton, and Bussmann are valuable trademarks of Eaton in the U.S. and other countries. You are not permitted to use the Eaton trademarks without prior written consent of Eaton.

CSA is a registered trademark of the Canadian Standards Group.
Sta-Kon is a registered trademark of Thomas & Betts.
UL is a registered trademark of the Underwriters Laboratories, Inc.

For Eaton's Bussmann series product information, call **1-855-287-7626** or visit: **Eaton.com/bussmannseries**

Follow us on social media to get the latest product and support information.

Powering Business Worldwide