HAMMOND MANUFACTURING

Quality Products. Service Excellence.

Type 4, 12 Mild Steel Junction Box *HJ H Series*

Continuous Hinge Door with Clamps







Panel Sold Separately

Application

- Designed for use as instrument enclosures, electric, hydraulic or pneumatic control housings, electrical junction boxes or terminal wiring enclosures.
- Provides protection where equipment may be hosed down or otherwise be very wet, or in outdoor applications for full weather protection.

Standards

- UL 508 Type 3R, 4, 12 and 13
- CSA Type 3R, 4, 12 and 13
- Complies with
  - NEMA Type 3R, 4, 12 and 13
  - JIC EGP-1-1967 unless marked[1]
  - IEC 60529, IP66

Construction

- Body formed from 16 or 14 gauge steel. Covers are formed from 14 gauge steel.
- Smooth, continuously welded seams without knockouts, cutouts or holes.
- Welded brackets provide for enclosure mounting.
- Continuous hinged cover is secured with stainless steel clamps and screws.
- Stainless steel continuous hinge on door may be removed by pulling the stainless steel hinge pin.
- Seamless poured-in place gasket.
- Internal threaded weld studs are provided for mounting inner panels.
- A bonding stud is provided on the door and a grounding stud is provided in the enclosure.

Finish

- Cover and enclosure are phosphatized, finished in recoatable smooth ANSI 61 gray powder coating.

Accessories

- Inner Panels
- Door Clamping Hardware
- Heaters
- Terminal Kit Assemblies
- Swing Panel Kit
- Ventilation
- Filtered Fans
- Type 1 Louvered Ventilating Plates
- Temperature Controls

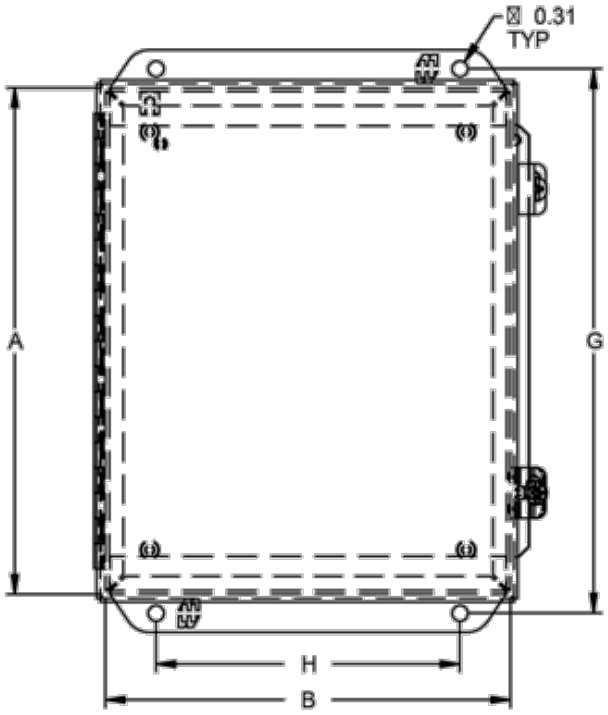

Front View

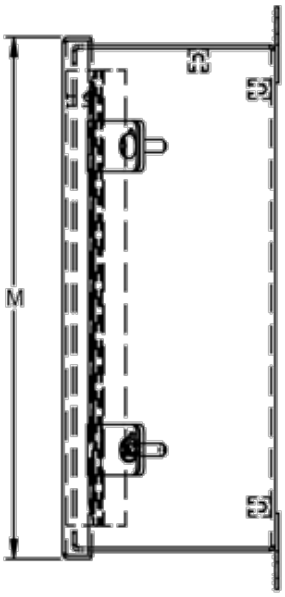

Side View

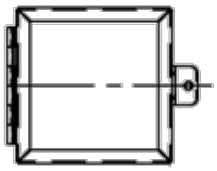

Clamp location when
A = 6.00" or less

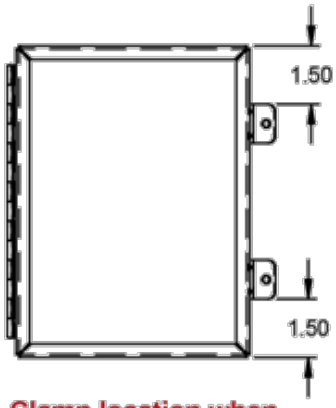

Clamp location when
A = 8.0" or 10.0"

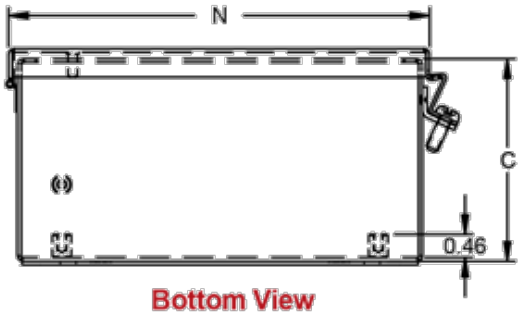

Bottom View

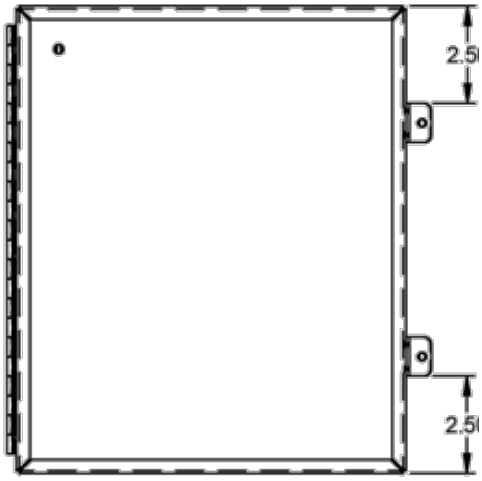

Clamp location when
A = 12.0" or greater

Part No.	A	B	C	Mounting Centers G	H	Cover Dimensions M	N	Gauge Body	Door	Opt. Panel Part No. ²	Opt. Panel Size		Ship Wt. (lbs)
HJ443HLP¹	4.00	4.00	3.00	4.75	2.00	4.31	4.31	16	14	-	-	-	2
HJ643HLP¹	6.00	4.00	3.00	6.75	2.00	6.31	4.31	16	14	**14R0503**	4.88	2.88	2
HJ863HLP	8.00	6.00	3.50	8.75	4.00	8.31	6.31	14	14	**14R0705**	6.75	4.88	5
HJ683HLP	6.00	8.00	3.50	6.75	6.00	6.31	8.31	14	14	**14R0705**	6.75	4.88	5
HJ444HLP¹	4.00	4.00	4.00	4.75	2.00	4.31	4.31	16	14	-	-	-	3
HJ644HLP¹	6.00	4.00	4.00	6.75	2.00	6.31	4.31	16	14	**14R0503**	4.88	2.88	3
HJ664HLP	6.00	6.00	4.00	6.75	4.00	6.31	6.31	16	14	**14R0505**	4.88	4.88	4
HJ884HLP	8.00	8.00	4.00	8.75	6.00	8.31	8.31	14	14	**14R0707**	6.75	6.88	7
HJ1084HLP	10.00	8.00	4.00	10.75	6.00	10.31	8.31	14	14	**14R0907**	8.75	6.88	8
HJ8104HLP	8.00	10.00	4.00	8.75	8.00	8.31	10.31	14	14	**14R0907**	8.75	6.88	8
HJ1264HLP	12.00	6.00	4.00	12.75	4.00	12.31	6.31	14	14	**14R1105**	10.75	4.88	8

				Mounting Centers		Cover Dimensions		Gauge		Opt. Panel			Ship Wt.
Part No.	A	B	C	G	H	M	N	Body	Door	Part No. [2]	Opt. Panel Size		(lbs)
HJ12105HLP	12.00	10.00	5.00	12.75	8.00	12.31	10.31	14	14	**14R1109**	10.75	8.88	10
HJ10125HLP	10.00	12.00	5.00	10.75	10.00	10.31	12.31	14	14	**14R1109**	10.75	8.88	12
HJ866HLP	8.00	6.00	6.00	8.75	4.00	8.31	6.31	14	14	**14R0705**	6.75	4.88	7
HJ1086HLP	10.00	8.00	6.00	10.75	6.00	10.31	8.31	14	14	**14R0907**	8.75	6.88	10
HJ10106HLP	10.00	10.00	6.00	10.75	8.00	10.31	10.31	14	14	**14R0909**	8.75	8.88	12
HJ12126HLP	12.00	12.00	6.00	12.75	10.00	12.31	12.31	14	14	**14R1111**	10.75	10.88	15
HJ1486HLP	14.00	8.00	6.00	14.75	6.00	14.31	8.31	14	14	**14R1307**	12.75	6.88	10
HJ14126HLP	14.00	12.00	6.00	14.75	10.00	14.31	12.31	14	14	**14R1311**	12.75	10.88	17
HJ12146HLP	12.00	14.00	6.00	12.75	12.00	12.31	14.31	14	14	**14R1311**	12.75	10.88	17
HJ16106HLP	16.00	10.00	6.00	16.75	8.00	16.31	10.31	14	14	**14R1509**	14.75	8.88	15
HJ16146HLP	16.00	14.00	6.00	16.75	12.00	16.31	14.31	14	14	**14R1513**	14.75	12.88	21
HJ14166HLP	14.00	16.00	6.00	14.75	14.00	14.31	16.31	14	14	**14R1513**	14.75	12.88	21
HJ12108HLP	12.00	10.00	8.00	12.75	8.00	12.31	10.31	14	14	**14R1109**	10.75	8.88	15
HJ14128HLP	14.00	12.00	8.00	14.75	10.00	14.31	12.31	14	14	**14R1311**	12.75	10.88	18
HJ16148HLP	16.00	14.00	8.00	16.75	12.00	16.31	14.31	14	14	**14R1513**	14.75	12.88	22
HJ161410HLP	16.00	14.00	10.00	16.75	12.00	16.31	14.31	14	14	**14R1513**	14.75	12.88	23

[1] Does not meet JIC requirements.

[2] Opt. panel part no. shown is painted white steel. For unpainted galvanized steel substitute "G" for "R" in the panel part no.

Data subject to change without notice

© 2015. Hammond Manufacturing Ltd. All rights reserved.