

SECTION A-A

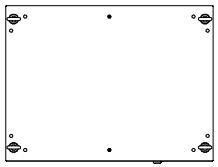

TOP VIEW

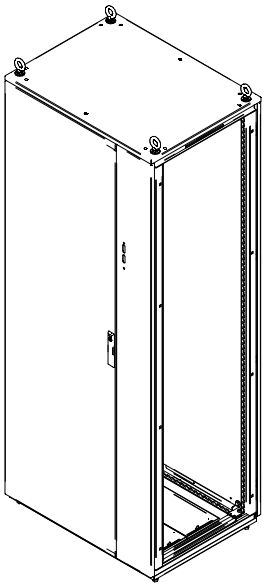

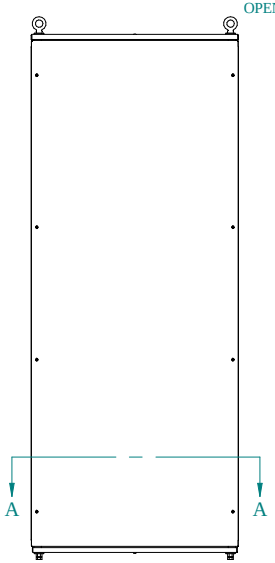

REAR VIEW

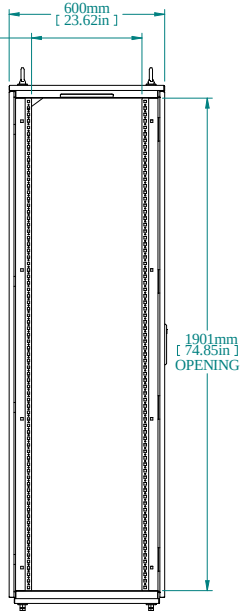

L.S. VIEW

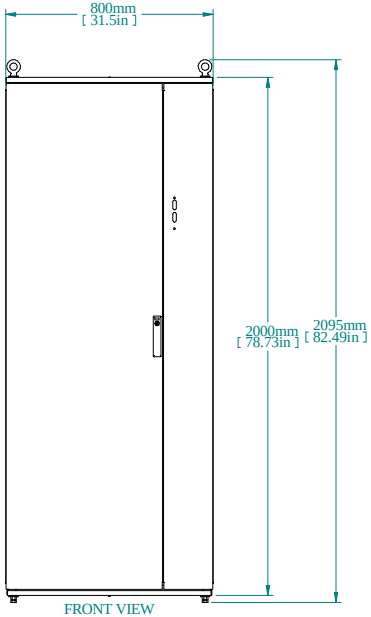

FRONT VIEW

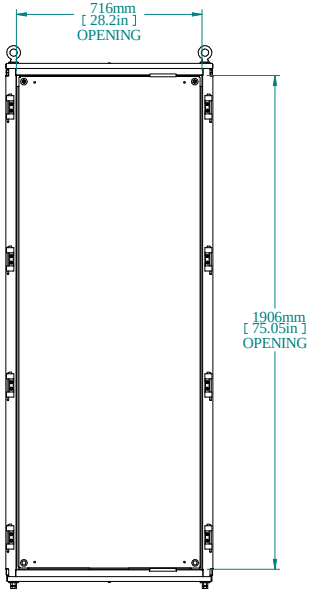

FRONT VIEW DOOR REMOVED

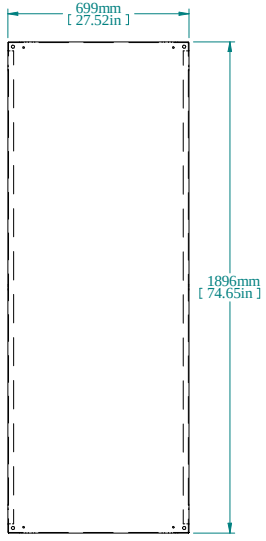

INNER PANEL

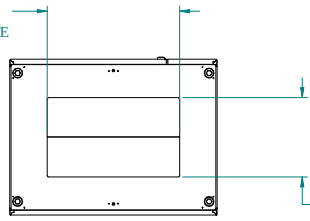

BOTTOM VIEW

PART NUMBERS	
HFMD2086	PAINTED TEXTURED GRAY RAL 7035

NOTES
Welded Assembly See Hammond Website for Additional Accessories

Data subject to change without notice. Isometric drawing not to scale.

HAMMOND MANUFACTURING™

www.hammondmfg.com

PART NO. HFMD2086