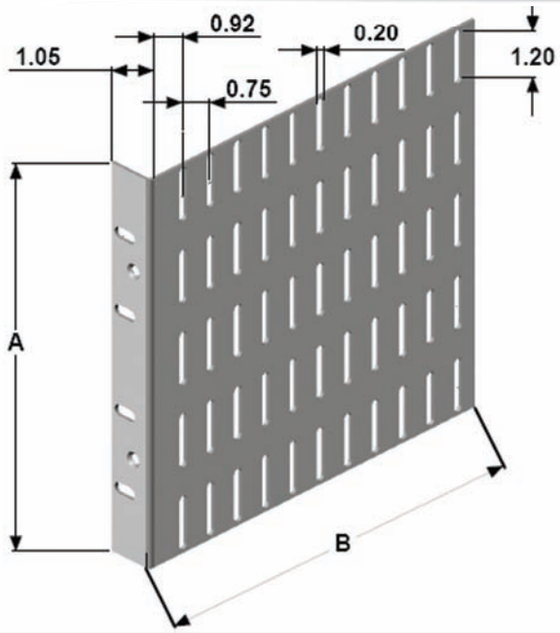

"P" Type Side Panel

Material: 0.080" aluminum with clear irridite finish

Part No.	Overall Height A	Depth B	Vector Handle	Accepts Max Card Height	Rack Units (H)
SW34P89/90	3.48"	9.0"	HA13	2.75"	2U
SW34P119/90	3.48"	12.0"	HA13	2.75"	2U
SW34P156/90	3.48"	15.75"	HA13	2.75"	2U
SW52P89/90	5.23"	9.0"	HA12	4.5"	3U
SW52P119/90	5.23"	12.0"	HA12	4.5"	3U
SW52P156/90	5.23"	15.75"	HA12	4.5"	3U
SW69P89/90	6.98"	9.0"	HA13	6.25"	4U
SW69P119/90	6.98"	12.0"	HA13	6.25"	4U
SW69P156/90	6.98"	15.75"	HA13	6.25"	4U
SW87P89/90	8.73"	9.0"	HA12	8.0"	5U
SW87P119/90	8.73"	12.0"	HA12	8.0"	5U
SW87P156/90	8.73"	15.75"	HA12	8.0"	5U
SW104P89/90	10.47"	9.0"	HA12	9.75"	6U
SW104P119/90	10.47"	12.0"	HA12	9.75"	6U
SW104P156/90	10.47"	15.75"	HA12	9.75"	6U
SW122P156/90	12.22"	15.75"	HA12	11.5"	7U
SW122P202/90	12.22"	20.25"	HA12	11.5"	7U
SW157P119/90	15.72"	12.0"	HA19-9U	15.0"	9U

Modules or Front Panel Mounting Hardware

SC 10-2A Thumb screws and SC10-3A jack screws (supplied with EFP modules, Cardmount modules and front assemblies to T-struts. SP09-2 spacers are used as standoffs for mounting modules to 1" T-struts (1.79" struts are standard with module subracks.)

Part No.	Description	Pkg Qty
SP09-2	Hex spacer for module mounting, includes hardware	12
SC10-2A	Thumb screw fully threaded for direct attachment of panels	12
SC10-3A	Jack screw for mounting modules to T-struts with jacking action	12

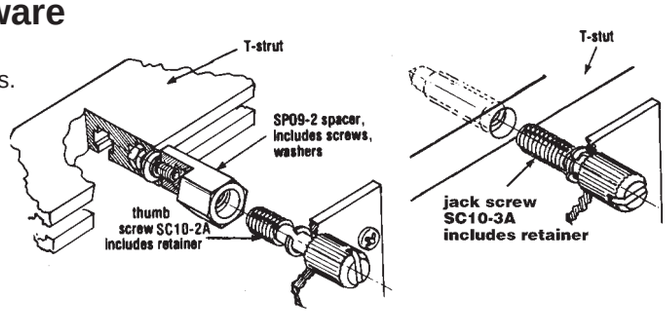

THE FOLLOWING ACCESSORIES ARE NOT COMPATIBLE WITH CCE-STYLE ENCLOSED RACKS ON THE PREVIOUS PAGE

Top and Bottom Card Rack Covers - CAC1, CAC2, CAC3

Two 1/16" thick aluminum covers with clear irridite finish provide protection over and under the card area, is designed to snap into opposing groves in the horizontal T-Strut rails. Rear panels CRK3, CRK5, CRK7 includes attachment hardware for mounting onto Vectorpak P-type sidepanels are easy to customize.


CAC1 and CRK3

Bottom Hinged Front Panels - HFP52-1

These are designed for use as a front "drop-down" panel with lanyard for holding the panel at 90º. Provides a work surface and prevents damage to equipment. Comes complete with hardware and full instructions. Panels are 1/8" thick brushed aluminum with clear irridite finish.


CCA13S with HFP52-1

Use With Rack Size Height (Actual wall height)	Width	Depth	Bottom Hinged Front Panels (w/L20 lanyard)	Rear Panels	Top / Bottom solid Covers	Rack Flange Dress Panels (3" wide)	Rack Handles (Sold as pair)
3U 5.23"	19.00"	9.00"	HFP52-1	CRK3	CAC1	FP52-2	HA12
3U 5.23"	19.00"	12.00"	HFP52-1	CRK3	CAC2	FP52-2	HA12
3U 5.23"	19.00"	15.75"	HFP52-1	CRK3	CAC3	FP52-2	HA12
4U 6.98"	19.00"	12.00"	HFP69-1	CRK5	CAC2	FP69-2	HA13
4U 6.98"	19.00"	15.75"	HFP69-1	CRK5	CAC3	FP69-2	HA13
5U 8.73"	19.00"	12.00"	HFP87-1	CRK7	CAC2	FP87-2	HA12
5U 8.73"	19.00"	15.75"	HFP87-1	CRK7	CAC3	FP87-2	HA12