COOPER Bussmann

250V Class H Fuse Blocks

H250 Series

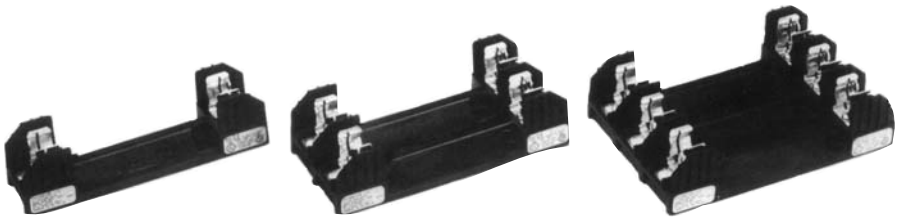

Catalog Symbol: H250 Series
Amp Rating: 1/10 to 600A
Voltage Rating: 250V
Agency Information:
CE, UL Listed, UL 4248, Guide IZLT, File 14853
CSA Certified, C22.2 No. 39, Class 6225-01, File 47235
Withstand Rating (SCCR): 10kA RMS Sym.
For use with Class H Fuses (NON and REN)
UL Flammability: 94V0
Materials: Thermoplastic

Class H Fuseblocks (250V) Catalog Data (for NON and REN Fuses)

Amps	Poles	Terminal Type (Suffix No.)									Figure Number	Wire Range
		Screw					Box Lug w/					
		Catalog Number	—	Clip with Reinforced Spring	Pressure Plate	Pressure Plate & Clip with Reinforced Spring	—	Clip with Reinforced Spring	Copper Only	0.25˝ Quick Connect		
1/10	1	H25030-1	S	SR	P	PR	C	CR	—	Q	1	C, CR #2-14 Cu, #2-12 Al P, PR #10-18 Cu ONLY Q N/A S, SR #10-18 Cu ONLY
to	2	H25030-2	S	SR	P	PR	C	CR	—	—	2	
30	3	H25030-3	S	SR	P	PR	C	CR	—	—	3	
31	1	H25060-1	—	—	—	—	C	CR	CO	—	4	C, CR #2-14 Cu, #2-8 Al CO, #2-14 Cu ONLY
to	2	H25060-2	—	—	—	—	C	CR	CO	—	5	
60	3	H25060-3	—	—	—	—	C	CR	CO	—	6	
61	1	H25100-1	—	SR	—	—	—	CR	—	—	7	CR #1/0-8 Cu/Al SR #8W/ Ring Terminal
to	2	H25100-2	—	SR	—	—	—	CR	—	—	8	
100	3	H25100-3	—	SR	—	—	—	CR	—	—	9	
101 to 200	1	H25200-1	—	—	—	—	—	CR	—	—	10	CR 250kcmil-6 Cu/Al
	3	H25200-3	—	—	—	—	—	CR	—	—	11	
201 to 400	1	H25400-1	—	—	—	—	—	CR*	—	—	12	CR 500kcmil-4 Cu/Al
	3	H25400-3	—	—	—	—	—	CR†	—	—	13	
401 to 600	1	H25600-1	—	—	—	—	—	CR	—	—	14	CR (2) 500kcmil-4/0 Cu/Al
	3	H25600-3	—	—	—	—	—	CR†	—	—	15	

*UL Recognized, No CSA Certification.
†No UL, No CSA Certification.

Dimensions – in
250V 1/10 to 30A

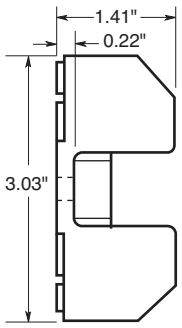

FIGURE 1.

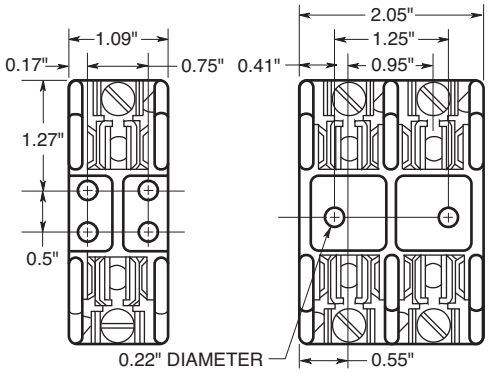

FIGURE 2.

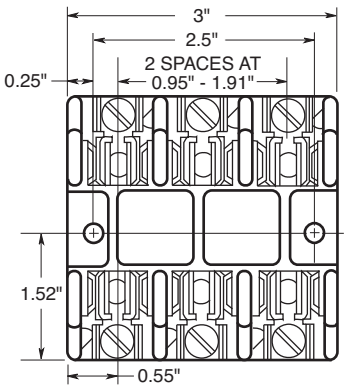

FIGURE 3.

250V, 31A to 60A

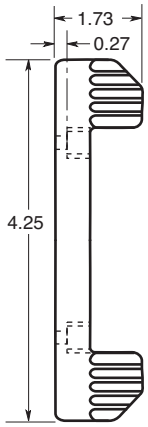

FIGURE 4.

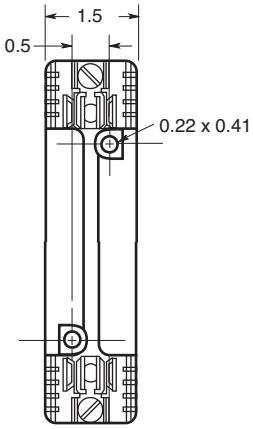

FIGURE 5.

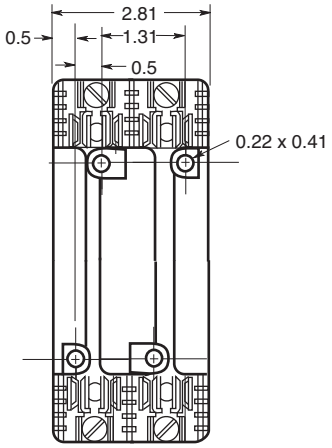

FIGURE 6.

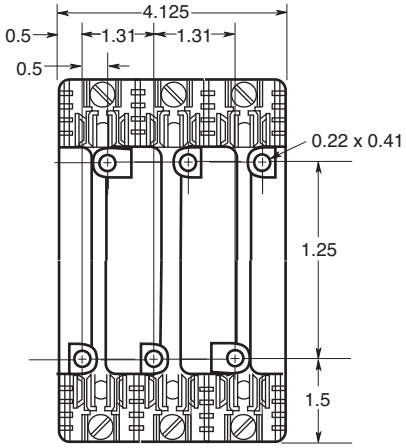

250V, 61A to 100A

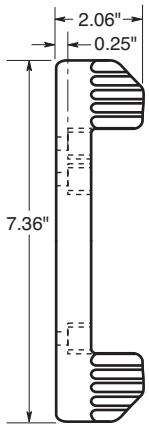

FIGURE 7.

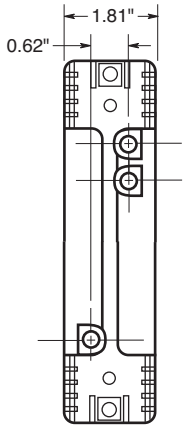

FIGURE 8.

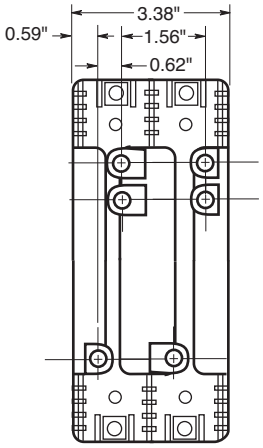

FIGURE 9.

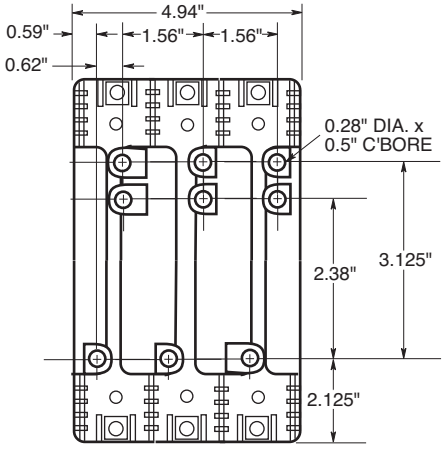

250V, 101A to 200A

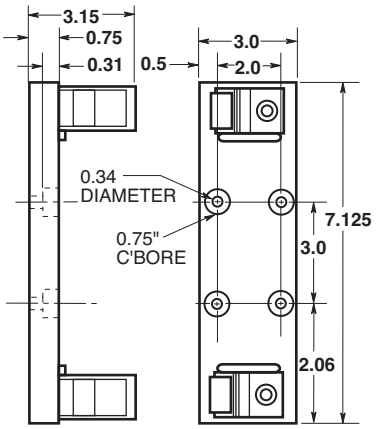

FIGURE 10.

250V, 101A to 200A

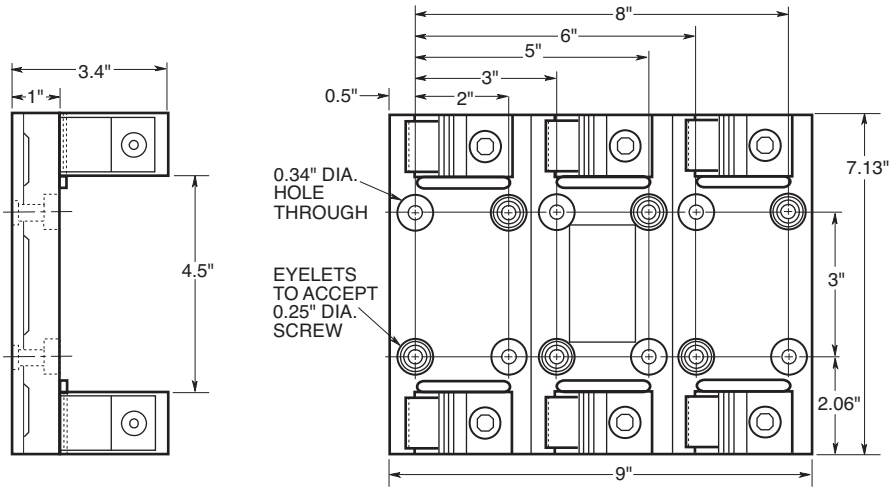

FIGURE 11.

250V, 201A to 400A

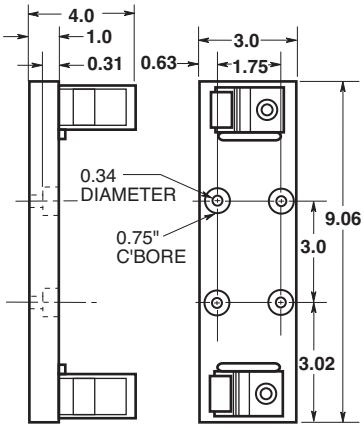

FIGURE 12.

250V, 201A to 400A

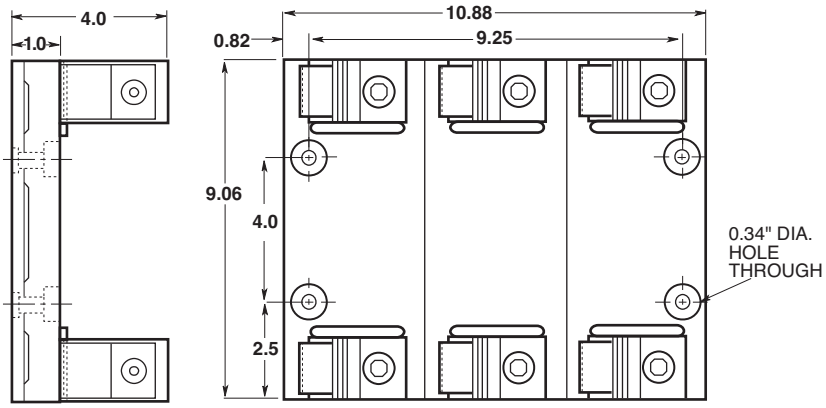

FIGURE 13.

250V, 401A to 600A

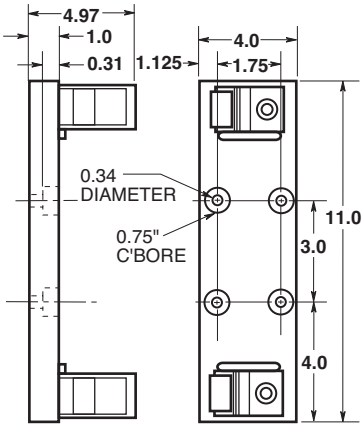

FIGURE 14.

250V, 401A to 600A

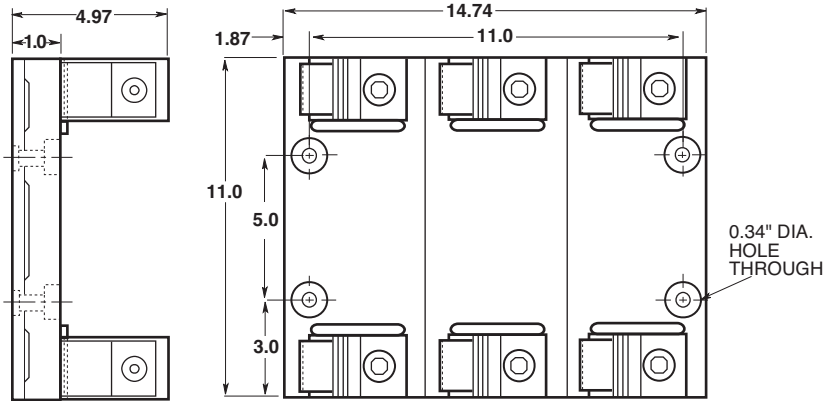

FIGURE 15.

The only controlled copy of this Data Sheet is the electronic read-only version located on the Cooper Bussmann Network Drive. All other copies of this document are by definition uncontrolled. This bulletin is intended to clearly present comprehensive product data and provide technical information that will help the end user with design applications. Cooper Bussmann reserves the right, without notice, to change design or construction of any products and to discontinue or limit distribution of any products. Cooper Bussmann also reserves the right to change or update, without notice, any technical information contained in this bulletin. Once a product has been selected, it should be tested by the user in all possible applications.