Class G Fuseblocks
For Bussmann SC Fuses
600 Volt, 0 - 20 Amp
480 Volt, 25 - 60 Amp

BG Series and G Series

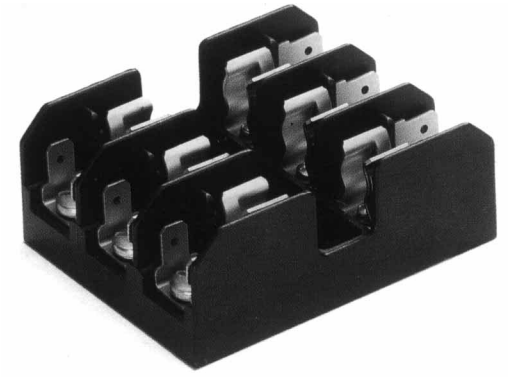

Catalog Symbol: BG Series and G Series

Class G Fuseblocks

For use with Class G Fuses (Bussmann SC)

Ampere Rating: 0-20A, 600V
25-60A, 480V

Withstand Rating: 100,000A RMS Sym.

Agency Information:

1-30A: UL Recognized, UL 512, Guide IZLT2, File E14853
35-60A: UL Listed, UL 512, Guide IZLT, File E14853
1-60A CSA Certified, C22.2 No. 39, Class 6225-01; File 47235

Material: (1-30) Thermoplastic
(35-60) Phenolic

DIN-RAIL Adapters: DRA-1 and DRA-2

Catalog Data

Amps	Poles	Terminal Type: Screw with Quick-Connect*	Pressure Plate w/Quick Connect*	Box Lug	Box Lug .w/Retaining Clip	Fig. No.
1	1	BG3011SQ	BG3011PQ	BG3011B	—	1
to	2	BG3012SQ	BG3012PQ	BG3012B	—	2
15	3	BG3013SQ	BG3013PQ	BG3013B	—	3
	1	BG3021SQ	BG3021PQ	BG3021B	—	1
20	2	BG3022SQ	BG3022PQ	BG3022B	—	2
	3	BG3023SQ	BG3023PQ	BG3023B	—	3
25	1	BG3031S	BG3031P	BG3031B	—	1
to	2	BG3032S	BG3032P	BG3032B	—	2
30	3	BG3033S	BG3033P	BG3033B	—	3
35	1	—	—	—	G30060-1CR	4
to	2	—	—	—	G30060-2CR	5
60	3	——		†G30060-3C	G30060-3CR	6
WIRE RANGE		#10 - #14CU	#10 - #14CU	#6 - #14CU Except 60A †#2 - #14CU #2 - #8AL	#2 - #14CU #2 - #8AL	

* QUICK CONNECT RATED FOR 20A MAXIMUM.

Dimensional Data — All dimensions (±0.015)

1 to 30A

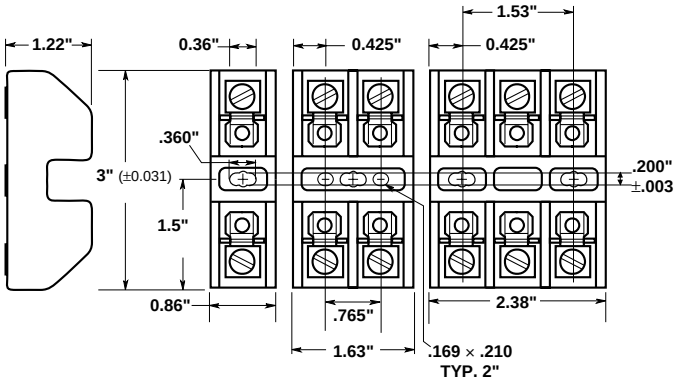

Figure 1. Figure 2. Figure 3.

35 to 60A

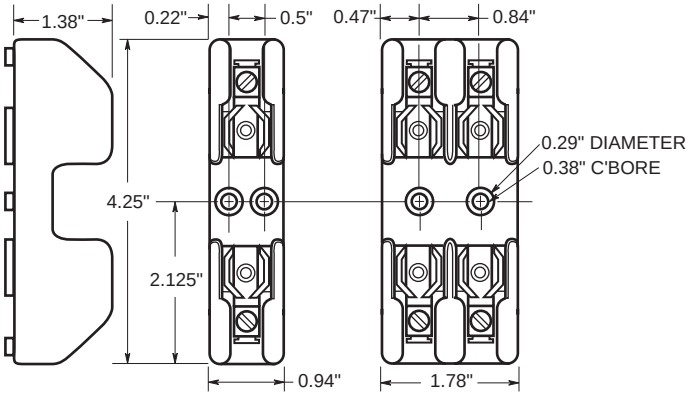

Figure 4. Figure 5.

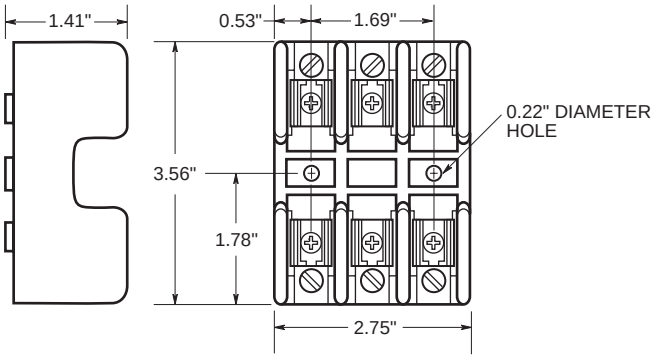

Figure 6.

CE logo denotes compliance with European Union Low Voltage Directive (50-1000Vac, 75-1500Vdc). Refer to Data Sheet: 8002 or contact Bussmann Application Engineering at 636-527-1270 for more information.

The only controlled copy of this Data Sheet is the electronic read-only version located on the Bussmann Network Drive. All other copies of this document are by definition uncontrolled. This bulletin is intended to clearly present comprehensive product data and provide technical information that will help the end user with design applications. Bussmann reserves the right, without notice, to change design or construction of any products and to discontinue or limit distribution of any products. Bussmann also reserves the right to change or update, without notice, any technical information contained in this bulletin. Once a product has been selected, it should be tested by the user in all possible applications.