Panel Mounting and Snap Fit Touchproof, PC2

PANEL MOUNT



- Protection Category PC2
- Fuse Size 5 x 20mm
- Screw Cap/Screwdriver Release
- Keyway Panel Cutout (FX0454)
- D Panel Cutout (FX0455)
- 10A, 250V (16A, 250V UL)

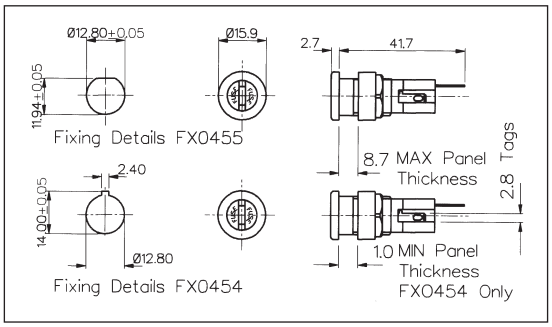

PANEL MOUNT



- Protection Category PC2
- Fuse Size 5 x 20mm
- Screw Cap/Screwdriver Release
- High Profile Bezel
- Keyway Panel Cutout (FX0454/S)
- D Panel Cutout (FX0455/S)
- 10A, 250V (16A, 250V UL)

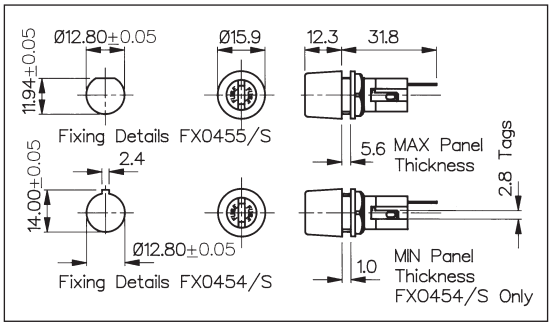

SNAP FIT TO PANEL



- Protection Category PC2
- Fuse Size 5 x 20mm
- Panel Sizes 1.0 & 1.5 and 2.0 & 3.0mm
- Screw Cap/Screwdriver Release
- 10A, 250V (16A, 250V UL)

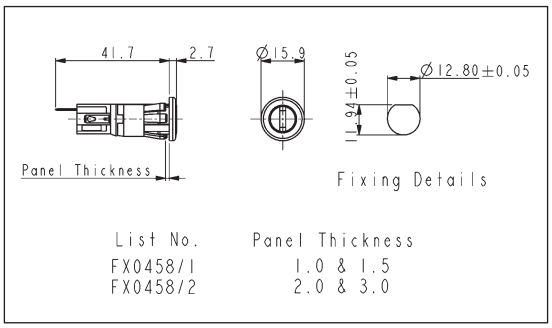

Specification	FX0454, FX0455	FX0454/S, FX0455/S	FX0458/Panel
Fuse Size:	5 x 20mm	5 x 20mm	5 x 20mm
Panel Size:	-	-	/1 (1.0-1.5mm panel, black sleeve) /2 (2.0-3.0mm panel, grey sleeve)
Fuse Carrier:	Screw cap/Screwdriver release	Screw cap/Screwdriver release	Screw cap/Screwdriver release
Terminations:	Solder tags	Solder tags	Solder tags
Max. Rating:	10A, 250V (16A, 250V a.c. UL)	10A, 250V (16A, 250V a.c. UL)	10A, 250V (16A, 250V a.c. UL)
Max. Power Dissipation:	2.5W (@ 23°C)	2.5W (@ 23°C)	2.5W (@ 23°C)
Insulation Resistance:	$>10^2$MΩ @ 500V d.c.	$>10^2$MΩ @ 500V d.c.	$>10^2$MΩ @ 500V d.c.
A.C. Breakdown:	7kV @ 50Hz	7kV @ 50Hz	>7kV @ 50Hz
Contact Resistance:	<10mΩ	<10mΩ	<10mΩ
Operating Temp:	–20°C to +85°C (ambient air temp + fuse temp rise)	–20°C to +85°C (ambient air temp + fuse temp rise)	–20°C to +85°C (ambient air temp + fuse temp rise)
Mouldings:			
Body:	Polyester UL94V-0 rated	Polyester UL94V-0 rated	Polyester UL94V-0 rated
Cap:	Nylon UL94V-0 rated	Nylon UL94V-0 rated	Nylon UL94V-0 rated
Nut:	Glass Filled Nylon UL94V-0 rated	Glass Filled Nylon UL94V-0 rated	
Contacts:	Brass, Silver Plated	Brass, Silver Plated	Brass, Silver Plated
Approvals:			
Accessories:	P.Nos. 11327, 12297 & 12298 (See page 163)	P.Nos. 11327, 12297 & 12298 (See page 163)	P.No. 11327 (See page 163)
RoHS	Compliant	Compliant	Compliant