"FPF" SERIES FAN-FILTER UNITS

data sheet

Filter Code: **FPF13KRG-100**

Description: Filter Kit

MECHANICAL SPECIFICATIONS

Dimensions:	**204x204x28 mm**
Weight:	**0,275 Kg**
Type of material:	**PC/ABS UL94V-0**
Colour:	**RAL 7032**
Protection degree:	**IP54 (EN60529)**
Fastener:	**by elastic hooks**
Plate thickness:	**from 1,5 to 2,2 mm**
Storage temp.:	**-30°C to +75°C**
Electric connection:	**-**
Earth connection:	**-**

OPERATING FEATURES

Rated voltage:	**-**
Rated frequency:	**-**
Rated power:	**-**
Rated current:	**-**
Fan speed:	**-**
Noise:	**-**
Operating temp.:	**- 30°C to +75°C**
Relative humidity:	**100% max**
Life (L10) at 40°C:	-

PERFORMANCES and APPROVALS

Max air flow:	**-**
Max static pressure:	**-**
Type of media:	**P15/350S**
Flammability:	**F1 (DIN 53438)**
Filtering class:	**EU3 (DIN 24185)**
Degree of separation:	**85% (DIN 24185)**
Degree of efficacy:	**< 20% (DIN 24185)**
Dust storage capacity:	**600 g/m^2**
Approvals:	CE

Note: the media is washable

FILTER KIT DIMENSIONS [mm]

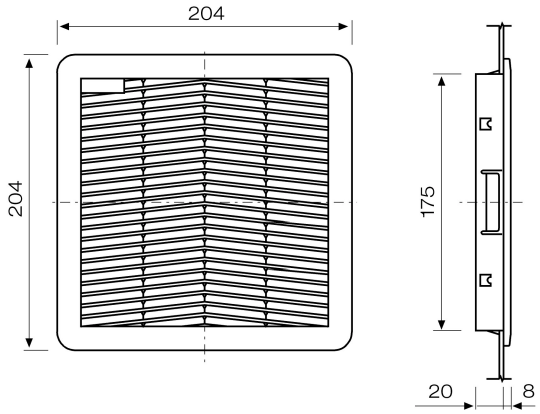

DIMENSIONS CUT-OUT [mm]

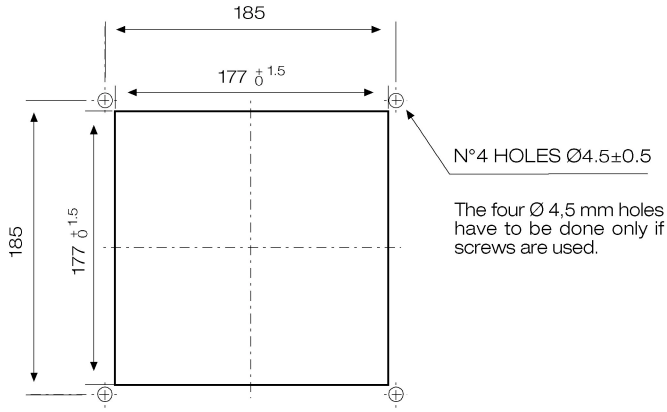

PERFORMANCE CURVES

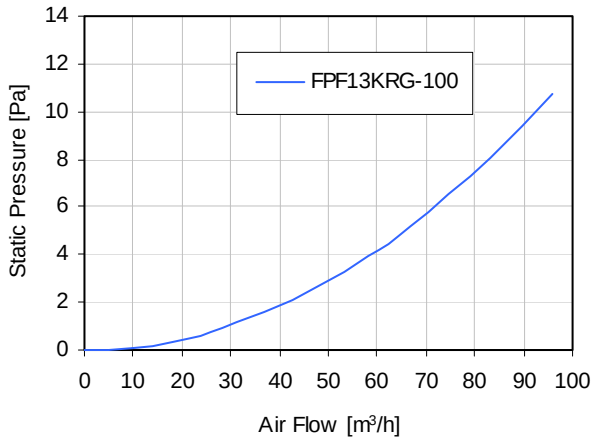

All specifications, data and drawings are subject to change without notice and are approximate.

CSF-E01/4

Please refer to out terms of sales including our warranty and limited liabilities clauses.

Fandis S.p.A. Via per Castelletto, 69
28040 Borgoticino (No) Italy
Tel. +39 0321 96.32.32 Fax +39 0321 96.32.96
info@fandis.it • www.fandis.it

COMPANY WITH QUALITY SYSTEM CERTIFIED BY DNV
=ISO 9001/2000=