## Front Panels

Screw-mounted front panel kits include handle and identification panel. Available in 3U, 6U and 9U heights and in three widths: 4HP (0.788”), 8HP (1.588”) and 12HP (2.388”). All mounting hardware, including board mounting support bracket and hardware also included. Brushed aluminum panel with clear irridite plating matches standard finish for Vector packaging products.

### Front Panels, Ejector Style, Type II

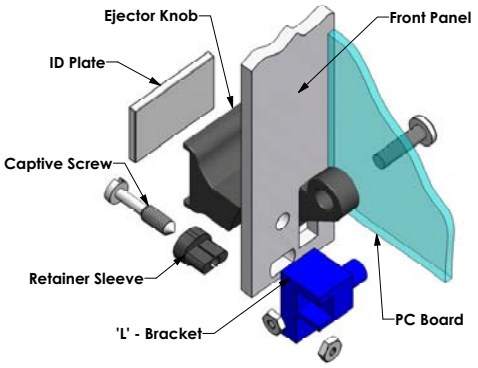




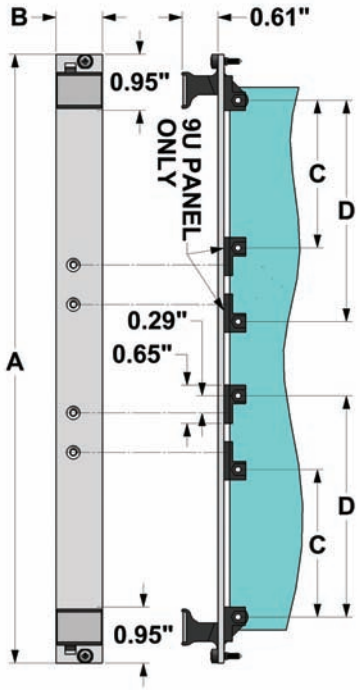


| Part # | DESCRIPTION | A | B | C | D |
|---|---|---|---|---|---|
| FPE04-3U | 3U X 4HP | 5.06” | 0.788” | N/A | N/A |
| FPE08-3U | 3U X 8HP | 5.06” | 1.588” | N/A | N/A |
| FPE12-3U | 3U X 12HP | 5.06” | 2.388” | N/A | N/A |
| FPE04-6U | 6U X 4HP | 10.31” | 0.788” | 3.50” | 5.25” |
| FPE08-6U | 6U X 8HP | 10.31” | 1.588” | 3.50” | 5.25” |
| FPE12-6U | 6U X 12HP | 10.31” | 2.388” | 3.50” | 5.25” |
| FPE04-9U | 9U X 4HP | 15.56” | 0.788” | 3.50” | 5.25” |
| FPE08-9U | 9U X 8HP | 15.56” | 1.588” | 3.50” | 5.25” |
| FPE12-9U | 9U X 12HP | 15.56” | 2.388” | 3.50” | 5.25” |

-Add suffix “B” to part # for panels without center brackets mounting, e.g. FPE04-6UB

### Front Panels, Fixed Handle Style, Type V

#### Type V, 3U Fixed Handle Style

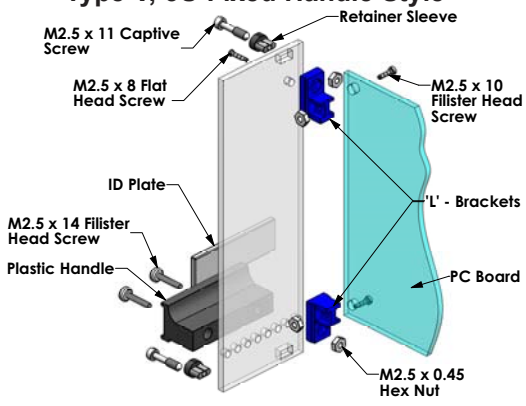




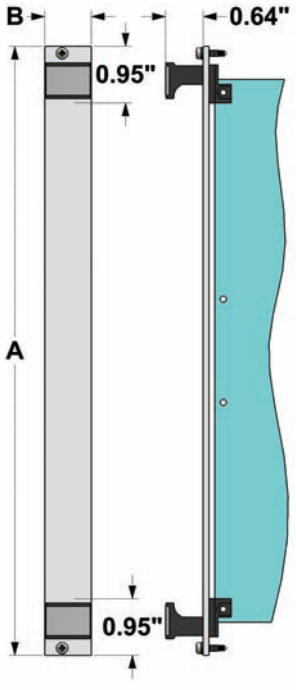


| Part # | DESCRIPTION | A | B |
|---|---|---|---|
| FP04-3U | 3U X 4HP | 5.06” | 0.788” |
| FP08-3U | 3U X 8HP | 5.06” | 1.588” |
| FP12-3U | 3U X 12HP | 5.06” | 2.388” |
| FP04-6U | 6U X 4HP | 10.31” | 0.788” |
| FP08-6U | 6U X 8HP | 10.31” | 1.588” |
| FP12-6U | 6U X 12HP | 10.31” | 2.388” |
| FP04-9U | 9U X 4HP | 15.56” | 0.788” |
| FP08-9U | 9U X 8HP | 15.56” | 1.588” |
| FP12-9U | 9U X 12HP | 15.56” | 2.388” |

-Fixed Handle Style front panel kit includes upper and lower handles (lower only on 3U versions) that extend across the full width of the panel

# Custom Front Panels

Whether you need standard panels, modified, or custom front panels, we have manufacturing capabilities to support your needs. Vector Electronics's custom aluminum front panels offer a wide range of design opportunities. Cost effective punching for volume production.

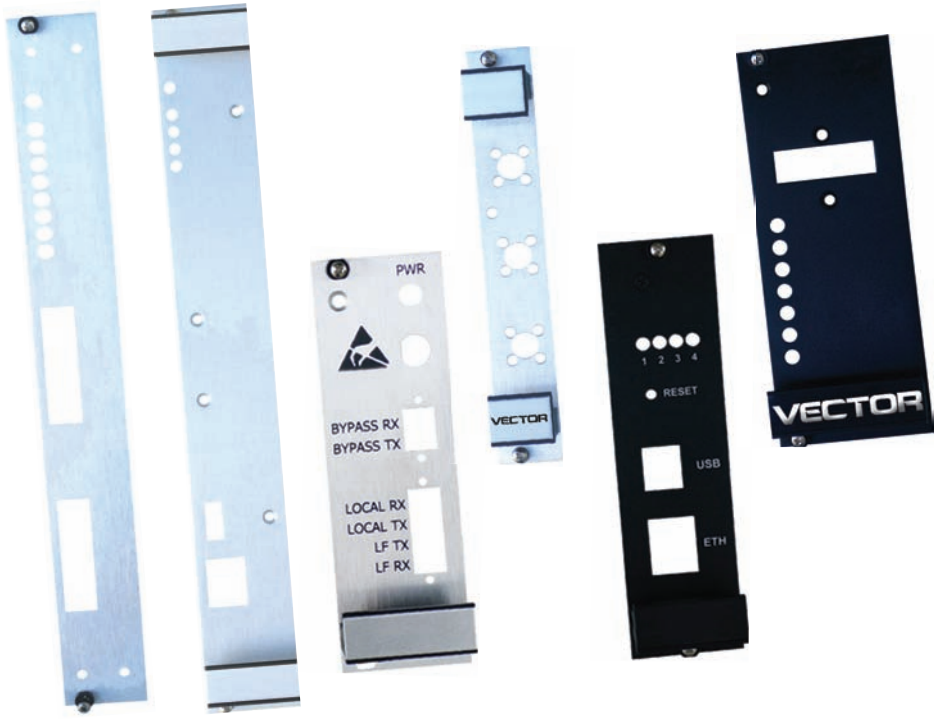


Customization :

- Panel cutouts
- Silkscreening
- Powder coating
- Special Finishing

# Standard Filler Panels

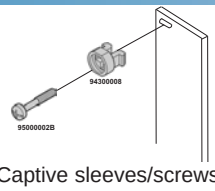


Captive sleeves/screws are included with all VectorPak™ filler panels and also sold separately in a hardware kit:

P/N HD99-1

| Includes | Qty |
|---|---|
| Black plastic sleeve | 48 |
| M2.5 x 11 mm,nickel plated steel screw | 48 |

Filler Panels/Blank-off Plates Features

- Covers unused slots
- Improves air flow
- Mounting hardware included

Typical slot width is 0.800" (4HP)
Material: 6063T5, extruded brushed Aluminum with clear Irridite finish.

Each Filler Panel Kit Includes
4,8 or 12HP panel (0.8", 1.6" or 2.4")
M2.5 Nickel plated mounting screws with 'captive' sleeves

| U | Part Number 4HP | Part Number 8HP | Part Number 12HP |
|---|---|---|---|
| 3 | 5231304-07 | 5231308-07 | 5231312-07 |
| 6 | 5261304-07 | 5261308-07 | 5261312-07 |
| 9 | 5291304-07 | 5291308-07 | 5291312-07 |

3U FILLER PANELS

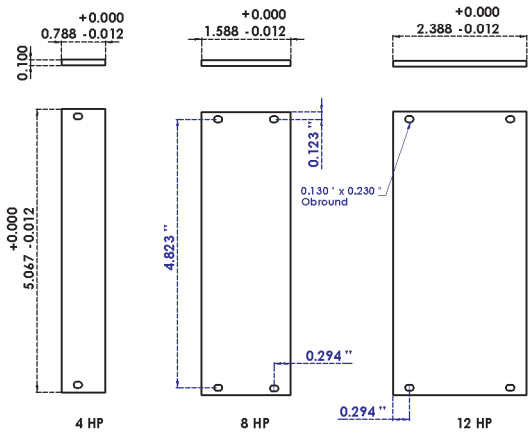


6U FILLER PANELS

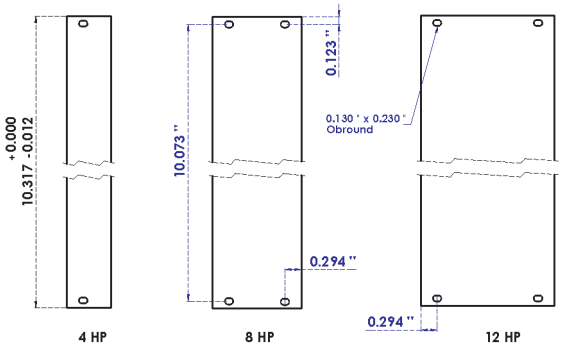

VECTOR
ELECTRONICS & TECHNOLOGY, INC

# IN349C

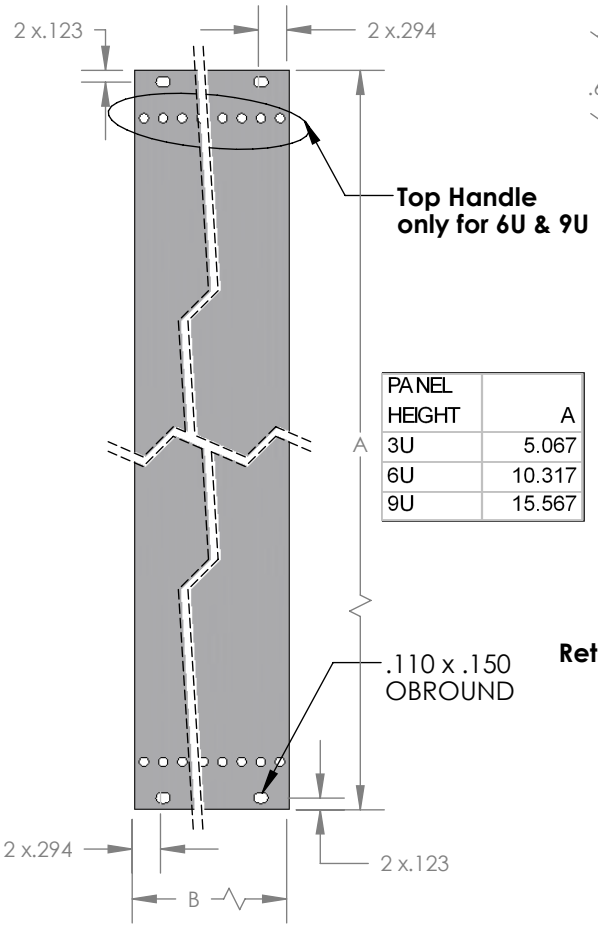


| PANEL HEIGHT | A |
|---|---|
| 3U | 5.067 |
| 6U | 10.317 |
| 9U | 15.567 |

| PANEL WIDTH | B |
|---|---|
| 4 HP | 0.788 |
| 8 HP | 1.588 |
| 12 HP | 2.388 |

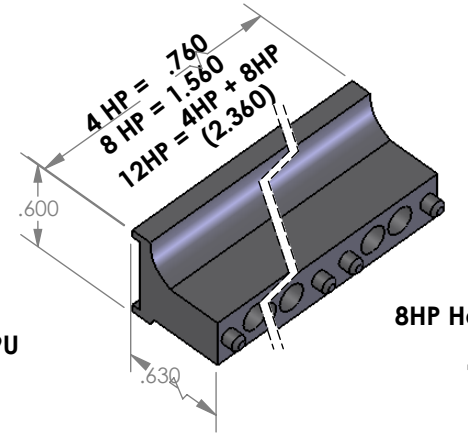


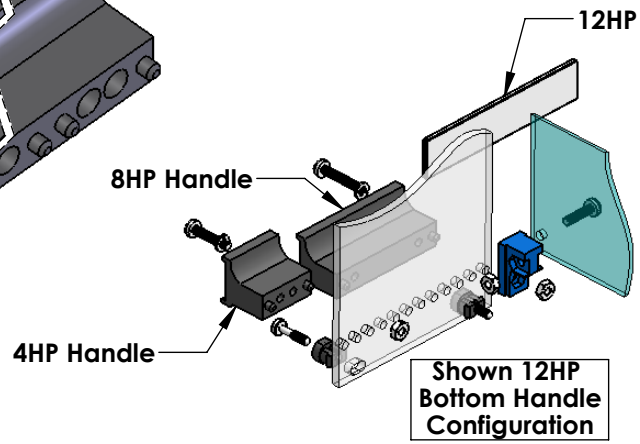


Shown 12HP
Bottom Handle
Configuration

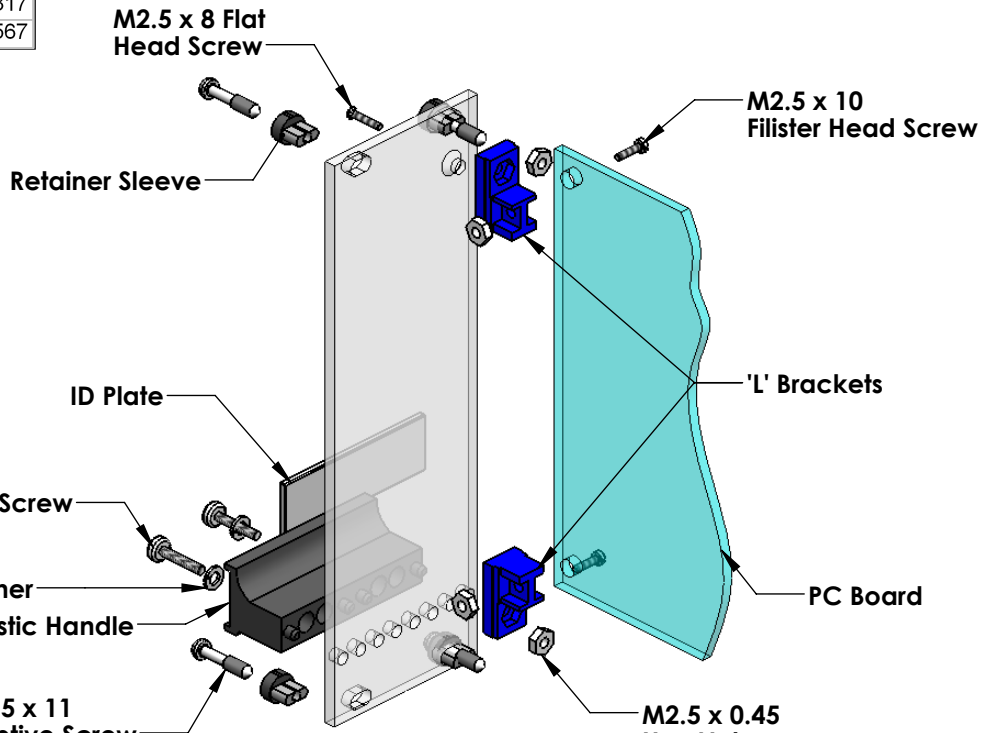


3U-8HP

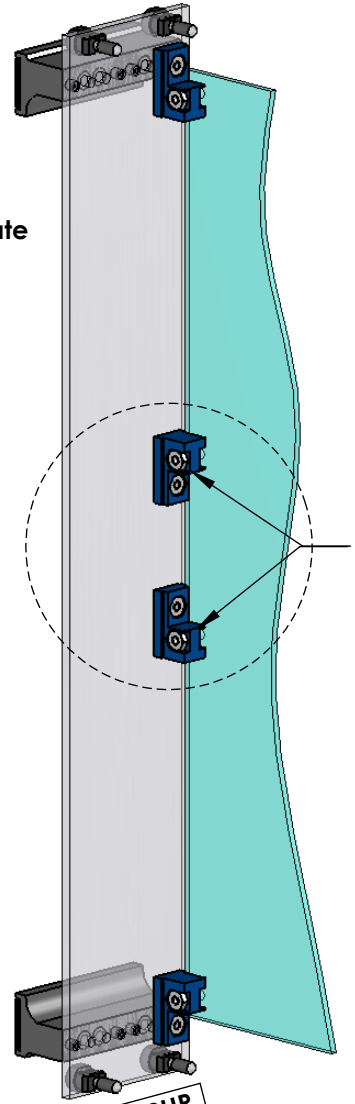


6U-8HP

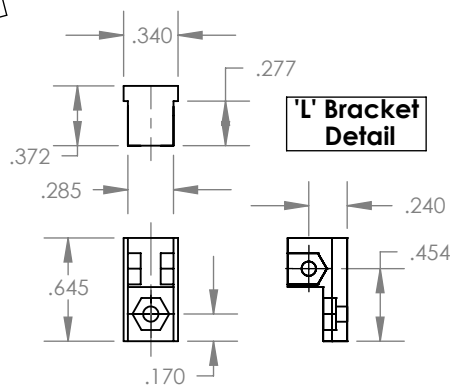


'L' Bracket
Detail


11115, VANOWEN STREET, NORTH HOLLYWOOD, CA-91605
PHONE : (818)985-8208 FAX : (818)985-7708
www.vectorelect.com


ALL DIMENSIONS ARE IN INCHES
TOLERANCE : .XXX ± .010

VECTOR
ELECTRONICS & TECHNOLOGY, INC

11115 Vanowen Street, North Hollywood,CA 91605
Phone: (818) 985-8208  Fax: (818) 985-7708

# IN399

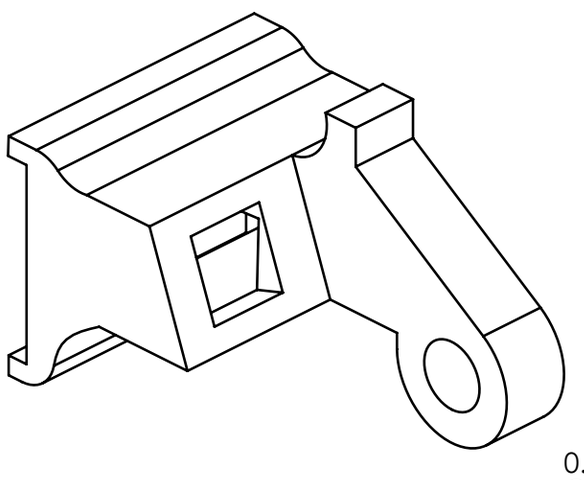

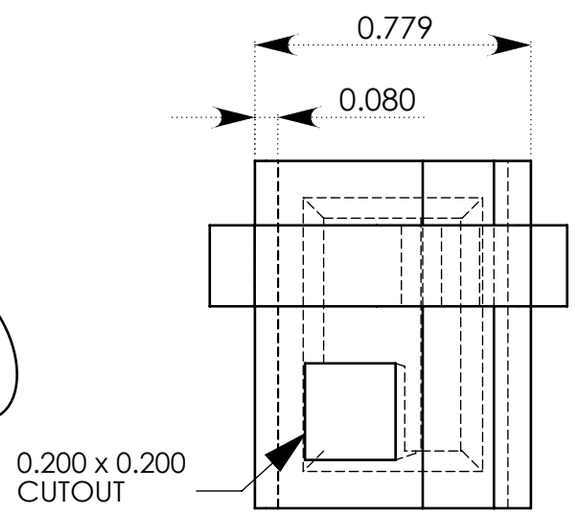


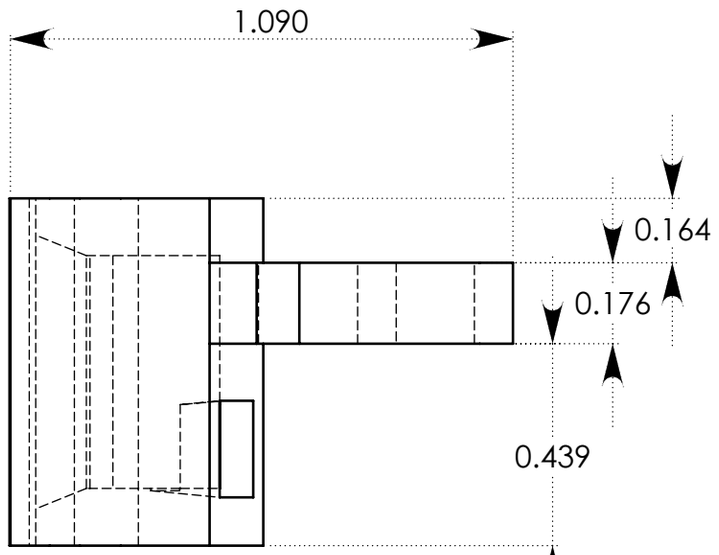


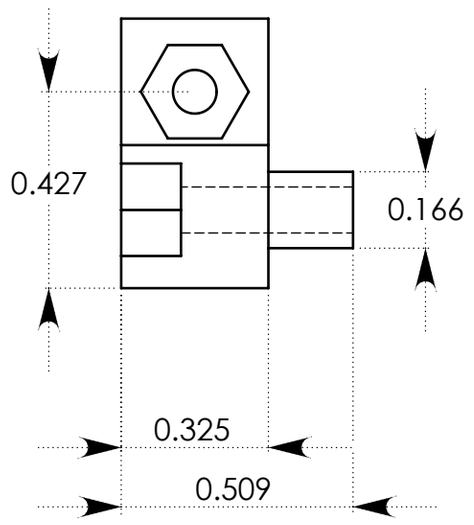


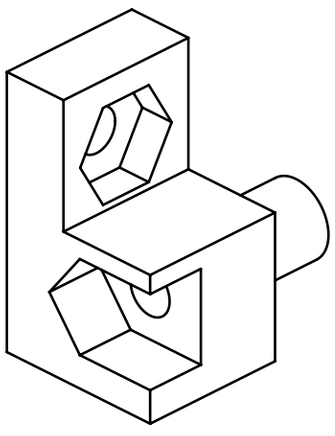

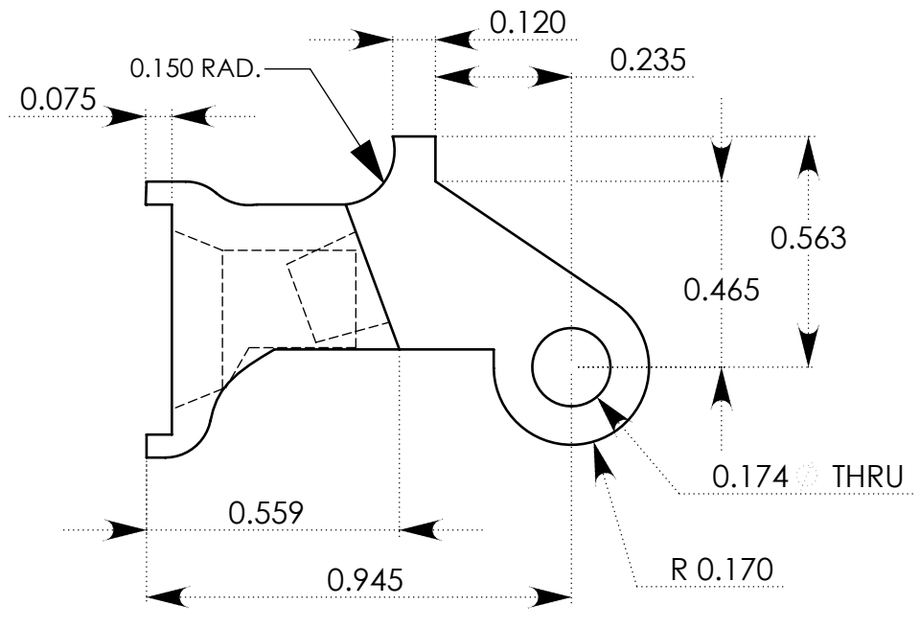


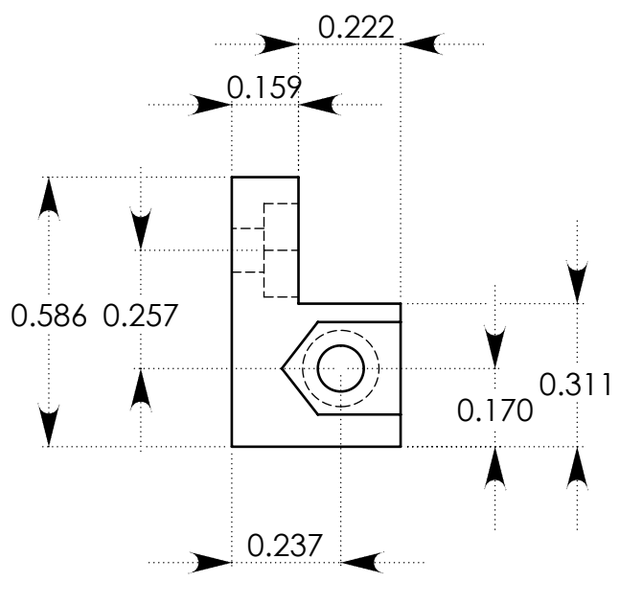


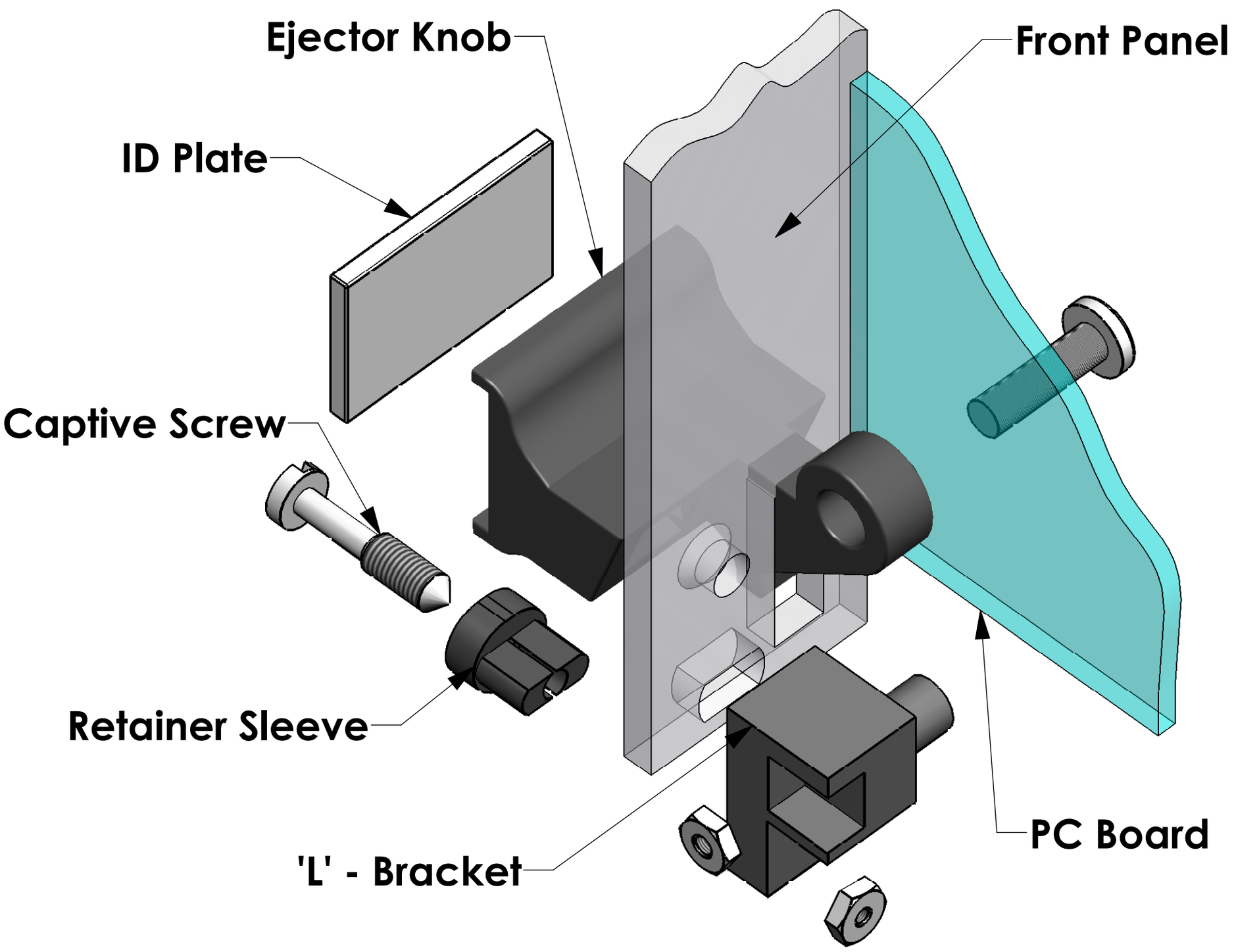


***FPE04-6U*** **PANEL WILL HAVE TWO CENTER HOLES FOR OPTIONAL 3U 'L' BRACKETS.**
**ORDER *FPE04-6UB* FOR PANEL WITHOUT THE CENTER HOLES.**