UNITED AUTOMATION

UNIVERSAL PHASE ANGLE CONTROLLER C/W INTEGRAL POWER DEVICE

FC11AL/2

X10260

INTRODUCTION

This single-phase firing module with a 26A triac, uses variable phase-angle control with adjustable signal matching and has a selectable soft-start option. The power supply transformer is remote for increased reliability and wide operational voltage capabilities. The FC11AL/2 controller governs the amount of power supplied to the load, by controlling the AC supply. A ramp and pedestal input circuit, allowing variation of firing phase angle by DC signal, enables more power through to the load with increasing angle.

APPLICATIONS

Suitable for most AC-resistive loads with current ratings up to 25A when fitted onto a suitable heatsink (see cooling requirements). This is also suitable for some inductive loads such as transformers and full-wave vibrators.

FEATURES:

- Integrated 26A triac.
- Wide range of control signal inputs (voltage or current).
- Adjustable soft-start function.
- Status LED giving output level indication.
- Consumes less than 2W.



RoHS Compliant

INSTALLATION

DIMENSIONS AND CONNECTIONS

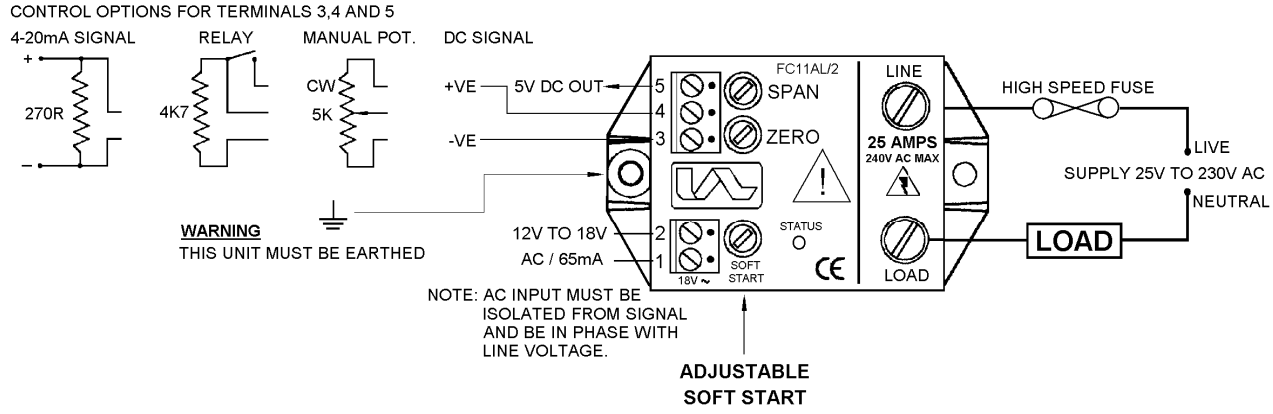

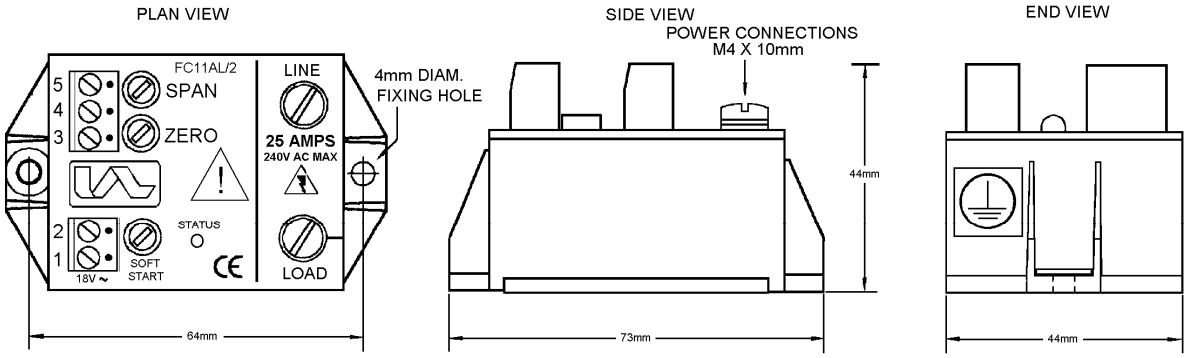

USE HEATSINK COMPOUND FOR EFFECTIVE THERMAL COUPLING
WARNING LIVE TERMINALS
SWITCH OFF MAINS SUPPLY BEFORE COMMENCING ANY SERVICE WORK

INSTALLATION

COOLING REQUIREMENTS

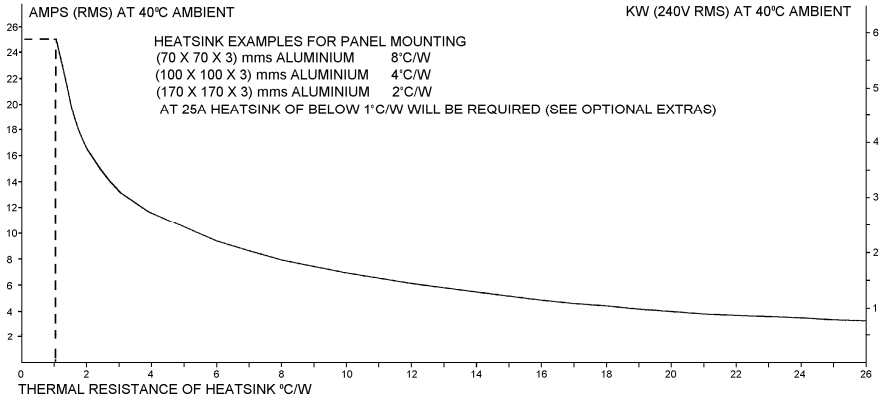

THERMAL DATA

WITH HEATSINK AS SPECIFIED, THE MAXIMUM LOAD CURRENT CAN BE DETERMINED. THIS IS THE MAXIMUM LOAD CURRENT POSSIBLE WITHOUT EXCEEDING THE DEVICE RATINGS.

SPECIFICATIONS

Signal span minimum	1.5 to 5V dc	AC input power (1 & 2)	12 to 18V ac @ 65mA
Signal span maximum	5 to 25V dc	Auxiliary output (5)	5V dc
Signal zero offset	0-30% of span	Triac limiting RMS current	26A
Signal input resistance	5kΩ ± 20%	AC line voltage +/- 10% @ 50/60 Hz	25 to 230V
Manual potentiometer	2, 5 or 10kΩ	Peak single cycle surge current	250A
I^2t for fusing (10m sec)	$250A^2s$	Power consumption	1.7W
Soft start time constant	0-20 seconds	Max. Peak voltage	600V
Isolation voltage	2.5kV RMS	Current rating	25A
Max. working temperature	65°C operational	Storage temperature	0°C to 85°C

FUSING:

It is recommended to use semiconductor (fast-acting) type fuses or circuit breakers (semiconductor - MCB) for unit protection and an appropriate fuse for unit supply (F1A). On initial power-up some loads may need an increased factor of safety for unit and/or device protection (see SRA datasheet for further information).

CE MARKING:

This product family carries a CE marking. These phase angle controllers need a suitable remote filter. For information see recommendation section and contact our sales desk (see Declaration of Conformity).

RECOMMENDATION

Other documents are available on request, which may be appropriate for your applications.

CODE	IDENTITY	DESCRIPTION
X10229	RFI	Filtering recommendation - addressing EMC Directive
X10213	ITA	Interaction, uses for phase angle and for burst fire control.
X10255	SRA	Safety requirements - addressing the Low Voltage Directive (LVD) including: thermal data/cooling, live parts warning, earthing requirements and fusing recommendations.
P01.1	COS	UAL conditions of sale

NOTE: It is recommended that installation and maintenance of this equipment should be done with reference to the current edition of the I.E.T. (formally I.E.E.) regulations (BS7671) by suitably qualified/trained personnel. The regulations contain important requirements regarding installation and safety of electrical equipment. Specific installers should refer to local and national regulations.

ORDER CODE: State part number: FC11AL/2 + Signal option.
Optional extras include: potentiometer, supply transformer, heatsink assembly, heatsink compound, heatsink, filter.
Note: When ordering the filter, the current that the FC11AL/2 is to be used at will be required.

UNITED AUTOMATION LIMITED

Southport Business Park
Wight Moss Way
Southport, PR8 4HQ
ENGLAND

Tel: 0044 (0) 1704 – 516500
Fax: 0044 (0) 1704 – 516501
enquiries@united-automation.com
www.united-automation.com