Inner Panels *EP Series*

Eclipse Series Enclosures



Features

- Larger than standard NEMA panel used in same sized enclosure.
- 12gauge steel construction.
- Larger sizes have 2 or 4 formed flanges for added strength.
- Slotted corner design for easier mounting.
- Finished in white or unpainted galvanized.

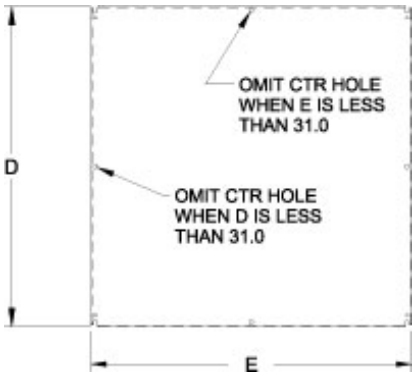

Mild Steel Part No.	Galvanized Part No.	Size D	E	Gauge
EP1212	**EPG1212**	10.20	10.20	12.00
EP1224	**EPG1224**	10.20	22.20	12.00
EP1612	**EPG1612**	14.20	10.20	12.00
EP1616	**EPG1616**	14.20	14.20	12.00
EP1620	**EPG1620**	14.20	18.20	12.00
EP2012	**EPG2012**	18.20	10.20	12.00
EP2016	**EPG2016**	18.20	14.20	12.00
EP2020	**EPG2020**	18.20	18.20	12.00
EP2024	**EPG2024**	18.20	22.20	12.00
EP2412	**EPG2412**	22.20	10.20	12.00
EP2416	**EPG2416**	22.20	14.20	12.00
EP2420	**EPG2420**	22.20	18.20	12.00
EP2424	**EPG2424**	22.20	22.20	12.00
EP2430	**EPG2430**	22.20	28.20	12.00
EP2442	**EPG2442**	22.20	40.20	12.00
EP2448	**EPG2448**	22.20	46.20	12.00
EP3012	**EPG3012**	28.20	10.20	12.00
EP3016	**EPG3016**	28.20	14.20	12.00
EP3020	**EPG3020**	28.20	18.20	12.00
EP3024	**EPG3024**	28.20	22.20	12.00
EP3030	**EPG3030**	28.20	28.20	12.00

Mild Steel Part No.	Galvanized Part No.	Size D	E	Gauge
EP3036	**EPG3036**	28.20	34.20	12.00
EP3042	**EPG3042**	28.20	40.20	12.00
EP3048	**EPG3048**	28.20	46.20	12.00
EP3060	**EPG3060**	28.20	58.20	12.00
EP3624	**EPG3624**	34.20	22.20	12.00
EP3630	**EPG3630**	34.20	28.20	12.00
EP3636	**EPG3636**	34.20	34.20	12.00
EP3642	**EPG3642**	34.20	40.20	12.00
EP3648	**EPG3648**	34.20	46.20	12.00
EP3660	**EPG3660**	34.20	58.20	12.00
EP4224	**EPG4224**	40.20	22.20	12.00
EP4230	**EPG4230**	40.20	28.20	12.00
EP4236	**EPG4236**	40.20	34.20	12.00
EP4824	**EPG4824**	46.20	22.20	12.00
EP4830	**EPG4830**	46.20	28.20	12.00
EP4836	**EPG4836**	46.20	34.20	12.00
EP4848	**EPG4848**	46.20	46.20	12.00
EP6036	**EPG6036**	58.20	34.20	12.00
EP7230	**EPG7230**	70.20	28.20	12.00
EP7236	**EPG7236**	70.20	34.20	12.00

Data subject to change without notice

© 2015. Hammond Manufacturing Ltd. All rights reserved.