HAMMOND MANUFACTURING

*Quality Products. Service Excellence.*

# Type 4 Mild Steel Wallmount Enclosure *Eclipse Series*

**Hinge Door with Quarter Turn/Handle**







Panel Sold Separately

## Application

- Designed to enclose electrical and/or electronic equipment and protect against harsh, industrial environments for wallmount applications.
- Impressive styling features like hidden hinges, attractive latching systems make the Eclipse a suitable addition to any high-tech equipment installation.
- A wide range of sizes and practical accessories make this product line a complete package.

## Standards

- UL 508 Type 3R, 4, and 12
- CSA Type 3R, 4, and 12
- Complies with
  - NEMA Type 3R, 4, and 12
  - IEC 60529, IP66

## Construction

- Formed 14 or 16 gauge steel.
- Smooth, continuously welded seams ground smooth.
- Door stiffeners are provided where required for increased strength and rigidity - designed to also permit additional mounting options.
- Formed lip on enclosure to exclude flowing liquids and contaminants.
- Door latches feature the added safety of quarter turn slot requiring use of tool for opening.
- Doors may be easily removed for modifications and are interchangeable.
- Seamless poured-in place gasket.
- Collar studs provided for mounting inner panel.
- Includes hardware kit with panel mounting nuts and sealing washers for wall mounting holes.
- Bonding stud provided on door and grounding stud installed in enclosure.
- Hinges are constructed from 304 stainless steel.
- Hinge pins are stainless steel.
- Quarter turn latch and multi-point handle (key lockable) are zinc diecast with black epoxy finish.
- Door alignment guide provided on 36" wide enclosures.

## Finish

- Cover and enclosure are phosphatized and finished with a recoatable powder inside and out with choice of ANSI 61 smooth Gray (GY) or RAL7035 textured light gray (LG).

## Accessories

- Cooling Products
- Ventilation
- DIN Rail Mounting Kit
- Door Stop Kit
- Gland Plates
- Inner Panels
- Quarter Turn Inserts and Keys
- Mounting Foot Kit
- Swing Frame
- Rear Hole Plugs
- Quarter Turn Assemblies
- Touch-Up Spray Paint
- Padlock Adaptor
- Blowers and Fans
- DIN Rails
- Drip Shield Kit
- Filtered Fans
- Heaters
- Handles
- Literature Pocket
- Swing Panel
- Eclipse Rack Panel
- Replacement Hinge Pins
- Temperature Controls
- Type 4 Hardware Kits

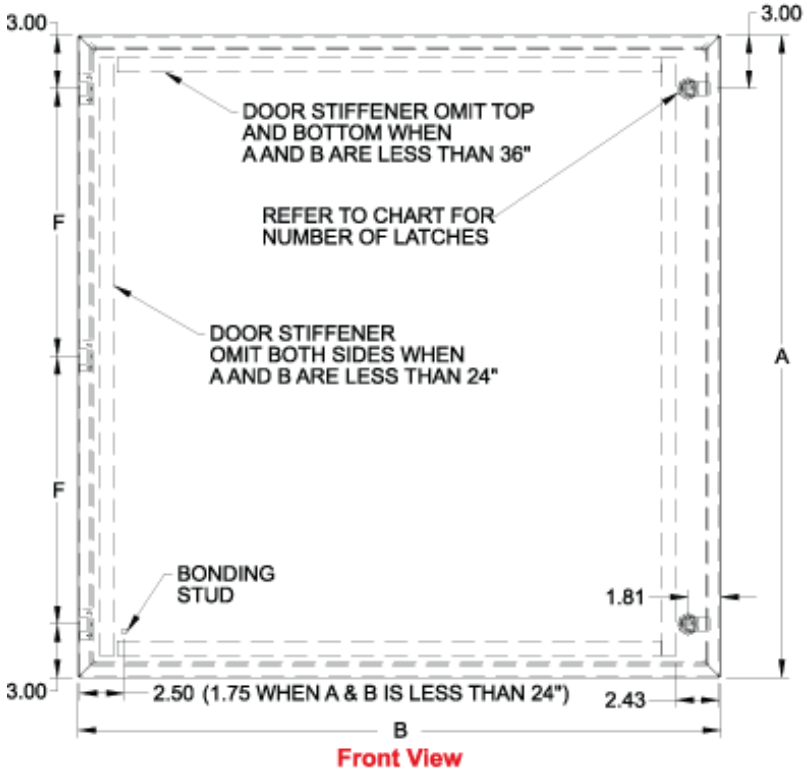


Front View

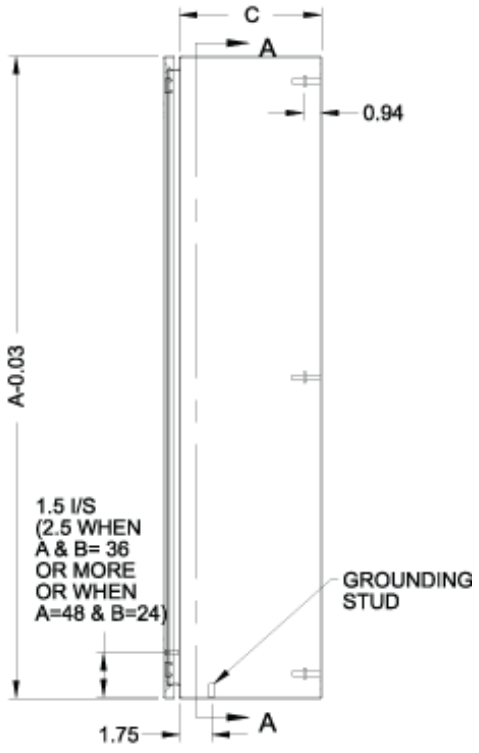


Side View

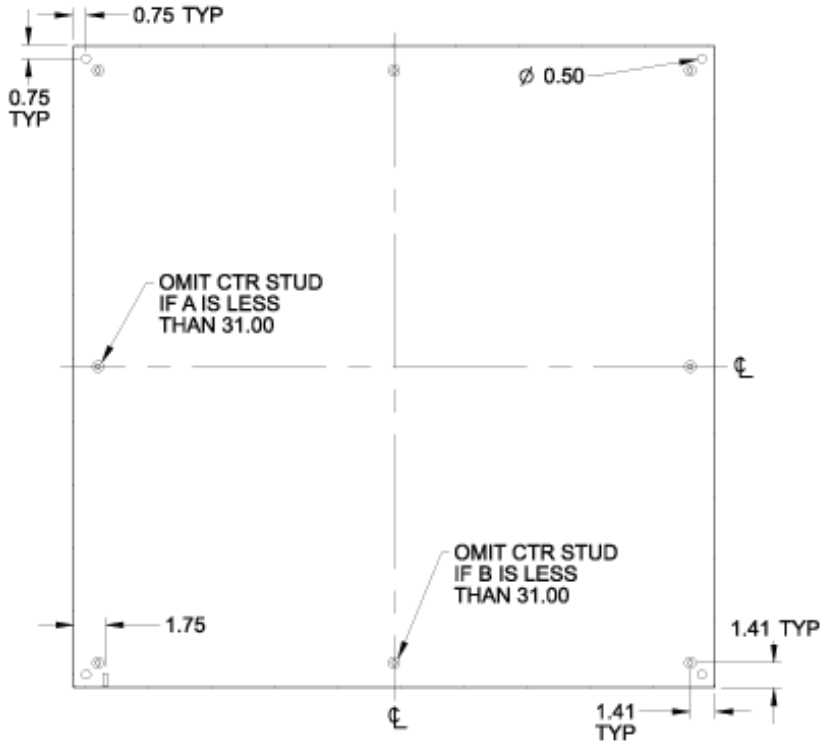


SECTION A-A

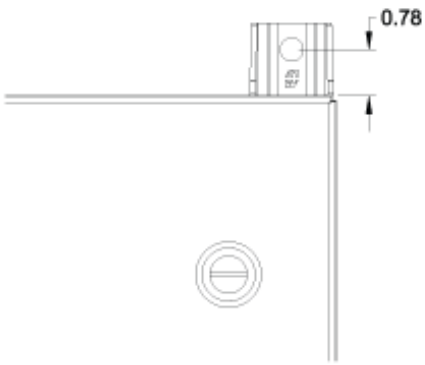


Mounting Foot Detail

| Part No. (ANSI 61 Gray) | Part No. (RAL 7035 Light Gray) | Overall Dimensions A | B | C | Door/Body Gauge | Latches Qty | Type | Opt. Panel Part No. | Panel Size D | E | # Hinges | F | Ship Wt. (lbs) |
|---|---|---|---|---|---|---|---|---|---|---|---|---|---|
| **EN4SD12126GY** | **EN4SD12126LG** | 12.00 | 12.00 | 6.00 | 16 | 1 | Qtr Turn | **EP1212** | 10.20 | 10.20 | 2 | 6.00 | 12 |
| **EN4SD12246GY** | **EN4SD12246LG** | 12.00 | 24.00 | 6.00 | 16 | 1 | Qtr Turn | **EP1224** | 10.20 | 22.20 | 2 | 18.00 | 24 |
| **EN4SD16126GY** | **EN4SD16126LG** | 16.00 | 12.00 | 6.00 | 16 | 1 | Qtr Turn | **EP1612** | 14.20 | 10.20 | 2 | 10.00 | 16 |
| **EN4SD16166GY** | **EN4SD16166LG** | 16.00 | 16.00 | 6.00 | 16 | 1 | Qtr Turn | **EP1616** | 14.20 | 14.20 | 2 | 10.00 | 19 |
| **EN4SD16206GY** | **EN4SD16206LG** | 16.00 | 20.00 | 6.00 | 16 | 1 | Qtr Turn | **EP1620** | 14.20 | 18.20 | 2 | 10.00 | 22 |
| **EN4SD20126GY** | **EN4SD20126LG** | 20.00 | 12.00 | 6.00 | 16 | 1 | Qtr Turn | **EP2012** | 18.20 | 10.20 | 2 | 14.00 | 20 |

| Part No. (ANSI 61 Gray) | Part No. (RAL 7035 Light Gray) | Overall Dimensions A | B | C | Door/Body Gauge | Latches Qty | Type | Opt. Panel Part No. | Panel Size D | E | # Hinges | F | Ship Wt. (lbs) |
|---|---|---|---|---|---|---|---|---|---|---|---|---|---|
| **EN4SD20166GY** | **EN4SD20166LG** | 20.00 | 16.00 | 6.00 | 16 | 1 | Qtr Turn | **EP2016** | 18.20 | 14.20 | 2 | 14.00 | 22 |
| **EN4SD20206GY** | **EN4SD20206LG** | 20.00 | 20.00 | 6.00 | 16 | 1 | Qtr Turn | **EP2020** | 18.20 | 18.20 | 2 | 14.00 | 26 |
| **EN4SD20246GY** | **EN4SD20246LG** | 20.00 | 24.00 | 6.00 | 16 | 1 | Qtr Turn | **EP2024** | 22.20 | 10.20 | 2 | 14.00 | 32 |
| **EN4SD24126GY** | **EN4SD24126LG** | 24.00 | 12.00 | 6.00 | 16 | 1 | Qtr Turn | **EP2412** | 22.20 | 10.20 | 2 | 18.00 | 24 |
| **EN4SD24166GY** | **EN4SD24166LG** | 24.00 | 16.00 | 6.00 | 16 | 1 | Qtr Turn | **EP2416** | 22.20 | 14.20 | 2 | 18.00 | 26 |
| **EN4SD24206GY** | **EN4SD24206LG** | 24.00 | 20.00 | 6.00 | 16 | 1 | Qtr Turn | **EP2420** | 22.20 | 18.20 | 2 | 18.00 | 30 |
| **EN4SD24246GY** | **EN4SD24246LG** | 24.00 | 24.00 | 6.00 | 14 | 2 | Qtr Turn | **EP2424** | 22.20 | 22.20 | 2 | 18.00 | 37 |
| **EN4SD30166GY** | **EN4SD30166LG** | 30.00 | 16.00 | 6.00 | 14 | 2 | Qtr Turn | **EP3016** | 28.20 | 14.20 | 3 | 12.00 | 35 |
| **EN4SD30206GY** | **EN4SD30206LG** | 30.00 | 20.00 | 6.00 | 14 | 2 | Qtr Turn | **EP3020** | 28.20 | 18.20 | 3 | 12.00 | 38 |
| **EN4SD30246GY** | **EN4SD30246LG** | 30.00 | 24.00 | 6.00 | 14 | 2 | Qtr Turn | **EP3024** | 28.20 | 22.20 | 3 | 12.00 | 40 |
| **EN4SD36246GY** | **EN4SD36246LG** | 36.00 | 24.00 | 6.00 | 14 | 2 | Qtr Turn | **EP3624** | 34.20 | 22.20 | 3 | 15.00 | 52 |
| **EN4SD36306GY** | **EN4SD36306LG** | 36.00 | 30.00 | 6.00 | 14 | 2 | Qtr Turn | **EP3630** | 34.20 | 28.20 | 3 | 15.00 | 60 |
| **EN4SD12248GY** | **EN4SD12248LG** | 12.00 | 24.00 | 8.00 | 16 | 1 | Qtr Turn | **EP1224** | 10.20 | 22.20 | 2 | 6.00 | 25 |
| **EN4SD16128GY** | **EN4SD16128LG** | 16.00 | 12.00 | 8.00 | 16 | 1 | Qtr Turn | **EP1612** | 14.20 | 10.20 | 2 | 10.00 | 16 |
| **EN4SD16168GY** | **EN4SD16168LG** | 16.00 | 16.00 | 8.00 | 16 | 1 | Qtr Turn | **EP1616** | 14.20 | 14.20 | 2 | 10.00 | 21 |
| **EN4SD16208GY** | **EN4SD16208LG** | 16.00 | 20.00 | 8.00 | 16 | 1 | Qtr Turn | **EP1620** | 14.20 | 18.20 | 2 | 10.00 | 25 |
| **EN4SD20128GY** | **EN4SD20128LG** | 20.00 | 12.00 | 8.00 | 16 | 1 | Qtr Turn | **EP2012** | 18.20 | 10.20 | 2 | 14.00 | 22 |
| **EN4SD20168GY** | **EN4SD20168LG** | 20.00 | 16.00 | 8.00 | 16 | 1 | Qtr Turn | **EP2016** | 18.20 | 14.20 | 2 | 14.00 | 25 |
| **EN4SD20208GY** | **EN4SD20208LG** | 20.00 | 20.00 | 8.00 | 16 | 1 | Qtr Turn | **EP2020** | 18.20 | 18.20 | 2 | 14.00 | 28 |
| **EN4SD20248GY** | **EN4SD20248LG** | 20.00 | 24.00 | 8.00 | 16 | 1 | Qtr Turn | **EP2024** | 18.20 | 22.20 | 2 | 14.00 | 32 |
| **EN4SD24128GY** | **EN4SD24128LG** | 24.00 | 12.00 | 8.00 | 16 | 1 | Qtr Turn | **EP2412** | 22.20 | 10.20 | 2 | 18.00 | 25 |
| **EN4SD24168GY** | **EN4SD24168LG** | 24.00 | 16.00 | 8.00 | 16 | 1 | Qtr Turn | **EP2416** | 22.20 | 14.20 | 2 | 18.00 | 26 |
| **EN4SD24208GY** | **EN4SD24208LG** | 24.00 | 20.00 | 8.00 | 16 | 1 | Qtr Turn | **EP2420** | 22.20 | 18.20 | 2 | 18.00 | 32 |
| **EN4SD24248GY** | **EN4SD24248LG** | 24.00 | 24.00 | 8.00 | 14 | 2 | Qtr Turn | **EP2424** | 22.20 | 22.20 | 2 | 18.00 | 40 |
| **EN4SD24308GY** | **EN4SD24308LG** | 24.00 | 30.00 | 8.00 | 14 | 2 | Qtr Turn | **EP2430** | 22.20 | 28.20 | 2 | 18.00 | 48 |
| **EN4SD30128GY** | **EN4SD30128LG** | 30.00 | 12.00 | 8.00 | 14 | 2 | Qtr Turn | **EP3012** | 28.20 | 10.20 | 3 | 12.00 | 34 |
| **EN4SD30168GY** | **EN4SD30168LG** | 30.00 | 16.00 | 8.00 | 14 | 2 | Qtr Turn | **EP3016** | 28.20 | 14.20 | 3 | 12.00 | 40 |
| **EN4SD30208GY** | **EN4SD30208LG** | 30.00 | 20.00 | 8.00 | 14 | 2 | Qtr Turn | **EP3020** | 28.20 | 18.20 | 3 | 12.00 | 42 |
| **EN4SD30248GY** | **EN4SD30248LG** | 30.00 | 24.00 | 8.00 | 14 | 2 | Qtr Turn | **EP3024** | 28.20 | 22.20 | 3 | 12.00 | 46 |
| **EN4SD30308GY** | **EN4SD30308LG** | 30.00 | 30.00 | 8.00 | 14 | 2 | Qtr Turn | **EP3030** | 28.20 | 28.20 | 3 | 12.00 | 67 |
| **EN4SD30368GY** | **EN4SD30368LG** | 30.00 | 36.00 | 8.00 | 14 | 2 | Qtr Turn | **EP3036** | 28.20 | 34.20 | 3 | 12.00 | 77 |
| **EN4SD36248GY** | **EN4SD36248LG** | 36.00 | 24.00 | 8.00 | 14 | 2 | Qtr Turn | **EP3624** | 34.20 | 22.20 | 3 | 15.00 | 55 |
| **EN4SD36308GY** | **EN4SD36308LG** | 36.00 | 30.00 | 8.00 | 14 | 2 | Qtr Turn | **EP3630** | 34.20 | 28.20 | 3 | 15.00 | 77 |
| **EN4SD36368GY** | **EN4SD36368LG** | 36.00 | 36.00 | 8.00 | 14 | 2 | Qtr Turn | **EP3636** | 34.20 | 34.20 | 3 | 15.00 | 94 |
| **EN4SD42248GY** | **EN4SD42248LG** | 42.00 | 24.00 | 8.00 | 14 | 1 | 3-point | **EP4224** | 40.20 | 22.20 | 4 | 12.00 | 80 |
| **EN4SD42308GY** | **EN4SD42308LG** | 42.00 | 30.00 | 8.00 | 14 | 1 | 3-point | **EP4230** | 40.20 | 28.20 | 4 | 12.00 | 95 |
| **EN4SD42368GY** | **EN4SD42368LG** | 42.00 | 36.00 | 8.00 | 14 | 1 | 3-point | **EP4236** | 40.20 | 34.20 | 4 | 12.00 | 105 |
| **EN4SD48248GY** | **EN4SD48248LG** | 48.00 | 24.00 | 8.00 | 14 | 1 | 3-point | **EP4824** | 46.20 | 22.20 | 4 | 14.00 | 110 |
| **EN4SD48308GY** | **EN4SD48308LG** | 48.00 | 30.00 | 8.00 | 14 | 1 | 3-point | **EP4830** | 46.20 | 28.20 | 4 | 14.00 | 115 |
| **EN4SD48368GY** | **EN4SD48368LG** | 48.00 | 36.00 | 8.00 | 14 | 1 | 3-point | **EP4836** | 46.20 | 34.20 | 4 | 14.00 | 120 |
| **EN4SD60368GY** | **EN4SD60368LG** | 60.00 | 36.00 | 8.00 | 14 | 1 | 3-point | **EP6036** | 58.20 | 34.20 | 4 | 18.00 | 150 |
| **EN4SD161210GY** | **EN4SD161210LG** | 16.00 | 12.00 | 10.00 | 16 | 1 | Qtr. Turn | **EP1612** | 14.20 | 10.20 | 2 | 10.00 | 18 |
| **EN4SD161610GY** | **EN4SD161610LG** | 16.00 | 16.00 | 10.00 | 16 | 1 | Qtr. Turn | **EP1616** | 14.20 | 14.20 | 2 | 10.00 | 23 |
| **EN4SD162010GY** | **EN4SD162010LG** | 16.00 | 20.00 | 10.00 | 16 | 1 | Qtr. Turn | **EP1620** | 14.20 | 18.20 | 2 | 10.00 | 28 |
| **EN4SD201610GY** | **EN4SD201610LG** | 20.00 | 16.00 | 10.00 | 16 | 1 | Qtr. Turn | **EP2016** | 18.20 | 14.20 | 2 | 14.00 | 28 |
| **EN4SD202010GY** | **EN4SD202010LG** | 20.00 | 20.00 | 10.00 | 16 | 1 | Qtr. Turn | **EP2020** | 18.20 | 18.20 | 2 | 14.00 | 31 |

| Part No. (ANSI 61 Gray) | Part No. (RAL 7035 Light Gray) | Overall Dimensions A | B | C | Door/Body Gauge | Latches Qty | Type | Opt. Panel Part No. | Panel Size D | E | # Hinges | F | Ship Wt. (lbs) |
|---|---|---|---|---|---|---|---|---|---|---|---|---|---|
| **EN4SD202410GY** | **EN4SD202410LG** | 20.00 | 24.00 | 10.00 | 16 | 1 | Qtr. Turn | **EP2024** | 18.20 | 22.20 | 2 | 14.00 | 36 |
| **EN4SD241210GY** | **EN4SD241210LG** | 24.00 | 12.00 | 10.00 | 16 | 1 | Qtr Turn | **EP2412** | 22.20 | 10.20 | 2 | 18.00 | 26 |
| **EN4SD241610GY** | **EN4SD241610LG** | 24.00 | 16.00 | 10.00 | 16 | 1 | Qtr. Turn | **EP2416** | 22.20 | 14.20 | 2 | 18.00 | 30 |
| **EN4SD242010GY** | **EN4SD242010LG** | 24.00 | 20.00 | 10.00 | 16 | 1 | Qtr. Turn | **EP2420** | 22.20 | 18.20 | 2 | 18.00 | 36 |
| **EN4SD242410GY** | **EN4SD242410LG** | 24.00 | 24.00 | 10.00 | 14 | 2 | Qtr. Turn | **EP2424** | 22.20 | 22.20 | 2 | 18.00 | 45 |
| **EN4SD243010GY** | **EN4SD243010LG** | 24.00 | 30.00 | 10.00 | 14 | 2 | Qtr. Turn | **EP2430** | 22.20 | 28.20 | 2 | 18.00 | 53 |
| **EN4SD302010GY** | **EN4SD302010LG** | 30.00 | 20.00 | 10.00 | 14 | 2 | Qtr. Turn | **EP3020** | 28.20 | 18.20 | 3 | 12.00 | 47 |
| **EN4SD302410GY** | **EN4SD302410LG** | 30.00 | 24.00 | 10.00 | 14 | 2 | Qtr. Turn | **EP3024** | 28.20 | 22.20 | 3 | 12.00 | 53 |
| **EN4SD303010GY** | **EN4SD303010LG** | 30.00 | 30.00 | 10.00 | 14 | 2 | Qtr. Turn | **EP3030** | 28.20 | 28.20 | 3 | 12.00 | 75 |
| **EN4SD362410GY** | **EN4SD362410LG** | 36.00 | 24.00 | 10.00 | 14 | 2 | Qtr. Turn | **EP3624** | 34.20 | 22.20 | 3 | 15.00 | 70 |
| **EN4SD363010GY** | **EN4SD363010LG** | 36.00 | 30.00 | 10.00 | 14 | 2 | Qtr. Turn | **EP3630** | 34.20 | 28.20 | 3 | 15.00 | 84 |
| **EN4SD363610GY** | **EN4SD363610LG** | 36.00 | 36.00 | 10.00 | 14 | 2 | Qtr. Turn | **EP3636** | 34.20 | 34.20 | 3 | 15.00 | 100 |
| **EN4SD423010GY** | **EN4SD423010LG** | 42.00 | 30.00 | 10.00 | 14 | 1 | 3-point | **EP4230** | 40.20 | 28.20 | 4 | 12.00 | 107 |
| **EN4SD423610GY** | **EN4SD423610LG** | 42.00 | 36.00 | 10.00 | 14 | 1 | 3-point | **EP4236** | 40.20 | 34.20 | 4 | 12.00 | 117 |
| **EN4SD482410GY** | **EN4SD482410LG** | 48.00 | 24.00 | 10.00 | 14 | 1 | 3-point | **EP4824** | 46.20 | 22.20 | 4 | 14.00 | 95 |
| **EN4SD483010GY** | **EN4SD483010LG** | 48.00 | 30.00 | 10.00 | 14 | 1 | 3-point | **EP4830** | 46.20 | 28.20 | 4 | 14.00 | 120 |
| **EN4SD483610GY** | **EN4SD483610LG** | 48.00 | 36.00 | 10.00 | 14 | 1 | 3-point | **EP4836** | 46.20 | 34.20 | 4 | 14.00 | 125 |
| **EN4SD603610GY** | **EN4SD603610LG** | 60.00 | 36.00 | 10.00 | 14 | 1 | 3-point | **EP6036** | 58.20 | 34.20 | 4 | 18.00 | 150 |
| **EN4SD201612GY** | **EN4SD201612LG** | 20.00 | 16.00 | 12.00 | 16 | 1 | Qtr Turn | **EP2016** | 18.20 | 14.20 | 2 | 14.00 | 32 |
| **EN4SD202012GY** | **EN4SD202012LG** | 20.00 | 20.00 | 12.00 | 16 | 1 | Qtr Turn | **EP2020** | 18.20 | 18.20 | 2 | 14.00 | 34 |
| **EN4SD242012GY** | **EN4SD242012LG** | 24.00 | 20.00 | 12.00 | 16 | 1 | Qtr Turn | **EP2420** | 22.20 | 18.20 | 2 | 18.00 | 38 |
| **EN4SD242412GY** | **EN4SD242412LG** | 24.00 | 24.00 | 12.00 | 14 | 2 | Qtr Turn | **EP2424** | 22.20 | 22.20 | 2 | 18.00 | 47 |
| **EN4SD302412GY** | **EN4SD302412LG** | 30.00 | 24.00 | 12.00 | 14 | 2 | Qtr Turn | **EP3024** | 28.20 | 22.20 | 3 | 12.00 | 57 |
| **EN4SD303012GY** | **EN4SD303012LG** | 30.00 | 30.00 | 12.00 | 14 | 2 | Qtr Turn | **EP3030** | 28.20 | 28.20 | 3 | 12.00 | 80 |
| **EN4SD362412GY** | **EN4SD362412LG** | 36.00 | 24.00 | 12.00 | 14 | 2 | Qtr Turn | **EP3624** | 34.20 | 22.20 | 3 | 15.00 | 62 |
| **EN4SD363012GY** | **EN4SD363012LG** | 36.00 | 30.00 | 12.00 | 14 | 2 | Qtr Turn | **EP3630** | 34.20 | 28.20 | 3 | 15.00 | 91 |
| **EN4SD363612GY** | **EN4SD363612LG** | 36.00 | 36.00 | 12.00 | 14 | 2 | Qtr Turn | **EP3636** | 34.20 | 34.20 | 3 | 15.00 | 104 |
| **EN4SD423012GY** | **EN4SD423012LG** | 42.00 | 30.00 | 12.00 | 14 | 1 | 3-point | **EP4230** | 40.20 | 28.20 | 4 | 12.00 | 111 |
| **EN4SD423612GY** | **EN4SD423612LG** | 42.00 | 36.00 | 12.00 | 14 | 1 | 3-point | **EP4236** | 40.20 | 34.20 | 4 | 12.00 | 121 |
| **EN4SD482412GY** | **EN4SD482412LG** | 48.00 | 24.00 | 12.00 | 14 | 1 | 3-point | **EP4824** | 46.20 | 22.20 | 4 | 14.00 | 98 |
| **EN4SD483612GY** | **EN4SD483612LG** | 48.00 | 36.00 | 12.00 | 14 | 1 | 3-point | **EP4836** | 46.20 | 34.20 | 4 | 14.00 | 148 |
| **EN4SD603612GY** | **EN4SD603612LG** | 60.00 | 36.00 | 12.00 | 14 | 1 | 3-point | **EP6036** | 58.20 | 34.20 | 4 | 18.00 | 165 |
| **EN4SD723012GY** | **EN4SD723012LG** | 72.00 | 30.00 | 12.00 | 14 | 2 | Qtr Turn, 5-point | **EP7230** | 70.20 | 28.20 | 5 | 16.50 | 190 |
| **EN4SD723612GY** | **EN4SD723612LG** | 72.00 | 36.00 | 12.00 | 14 | 2 | Qtr Turn, 5-point | **EP7236** | 70.20 | 34.20 | 5 | 16.50 | 195 |
| **EN4SD242016GY** | **EN4SD242016LG** | 24.00 | 20.00 | 16.00 | 16 | 1 | Qtr Turn | **EP2420** | 22.20 | 18.20 | 2 | 18.00 | 52 |
| **EN4SD242416GY** | **EN4SD242416LG** | 24.00 | 24.00 | 16.00 | 14 | 2 | Qtr Turn | **EP2424** | 22.20 | 22.20 | 2 | 18.00 | 66 |
| **EN4SD302416GY** | **EN4SD302416LG** | 30.00 | 24.00 | 16.00 | 14 | 2 | Qtr Turn | **EP3024** | 28.20 | 22.20 | 3 | 12.00 | 85 |
| **EN4SD363016GY** | **EN4SD363016LG** | 36.00 | 30.00 | 16.00 | 14 | 2 | Qtr Turn | **EP3630** | 34.20 | 28.20 | 3 | 15.00 | 102 |
| **EN4SD423616GY** | **EN4SD423616LG** | 42.00 | 36.00 | 16.00 | 14 | 1 | 3-point | **EP4236** | 40.20 | 34.20 | 4 | 12.00 | 140 |

| Part No. (ANSI 61 Gray) | Part No. (RAL 7035 Light Gray) | Overall Dimensions A | B | C | Door/Body Gauge | Latches Qty | Type | Opt. Panel Part No. | Panel Size D | E | # Hinges | F | Ship Wt. (lbs) |
|---|---|---|---|---|---|---|---|---|---|---|---|---|---|
| **EN4SD483616GY** | **EN4SD483616LG** | 48.00 | 36.00 | 16.00 | 14 | 1 | 3-point | **EP4836** | 46.20 | 34.20 | 4 | 14.00 | 148 |
| **EN4SD603616GY** | **EN4SD603616LG** | 60.00 | 36.00 | 16.00 | 14 | 1 | 3-point | **EP6036** | 58.20 | 34.20 | 4 | 18.00 | 200 |
| **EN4SD723016GY** | **EN4SD723016LG** | 72.00 | 30.00 | 16.00 | 14 | 2 | Qtr Turn, 5-point | **EP7230** | 70.20 | 28.20 | 5 | 16.50 | 215 |
| **EN4SD723616GY** | **EN4SD723616LG** | 72.00 | 36.00 | 16.00 | 14 | 2 | Qtr Turn, 5-point | **EP7236** | 70.20 | 34.20 | 5 | 16.50 | 217 |
| **EN4SD242420GY** | **EN4SD242420LG** | 24.00 | 24.00 | 20.00 | 14 | 2 | Qtr Turn | **EP2424** | 22.20 | 22.20 | 2 | 18.00 | 70 |
| **EN4SD302420GY** | **EN4SD302420LG** | 30.00 | 24.00 | 20.00 | 14 | 2 | Qtr Turn | **EP3024** | 28.20 | 22.20 | 3 | 12.00 | 82 |
| **EN4SD363020GY** | **EN4SD363020LG** | 36.00 | 30.00 | 20.00 | 14 | 2 | Qtr Turn | **EP3630** | 34.20 | 28.20 | 3 | 15.00 | 117 |
| **EN4SD483620GY** | **EN4SD483620LG** | 48.00 | 36.00 | 20.00 | 14 | 1 | 3-point | **EP4836** | 46.20 | 34.20 | 4 | 14.00 | 165 |
| **EN4SD603620GY** | **EN4SD603620LG** | 60.00 | 36.00 | 20.00 | 14 | 1 | 3-point | **EP6036** | 58.20 | 34.20 | 4 | 18.00 | 210 |
| **EN4SD723020GY** | **EN4SD723020LG** | 72.00 | 30.00 | 20.00 | 14 | 2 | Qtr Turn, 5-point | **EP7230** | 70.20 | 28.20 | 5 | 16.50 | 217 |
| **EN4SD302424GY** | **EN4SD302424LG** | 30.00 | 24.00 | 24.00 | 14 | 2 | Qtr Turn | **EP3024** | 28.20 | 22.20 | 3 | 12.00 | 115 |
| **EN4SD723024GY** | **EN4SD723024LG** | 72.00 | 30.00 | 24.00 | 14 | 2 | Qtr Turn, 5-point | **EP7230** | 70.20 | 28.20 | 5 | 16.50 | 220 |

*Data subject to change without notice*

© 2015. Hammond Manufacturing Ltd. All rights reserved.