HAMMOND MANUFACTURING

*Quality Products. Service Excellence.*

# Type 4X Stainless Steel Wallmount Enclosure *Eclipse Series*

**Hinge Door with Quarter Turn/Handle**



Panel Sold Separately

## Application

- Designed to enclose electrical and/or electronic equipment and protect against harsh, industrial environments for wallmount applications.
- Impressive styling features like hidden hinges and attractive latching systems make the Eclipse a suitable addition to any high-tech equipment installation.
- A wide range of sizes and practical accessories make this product line a complete package.

## Standards

- UL 508 Type 3R, 4, 4X and 12
- CSA Type 3R, 4, 4X and 12
- Complies with
  - NEMA 3R, 4, 4X, 12 and 13
  - IEC 60529, IP 66

## Construction

- Formed 14 or 16 gauge 304 or 316 stainless steel.
- Continuously welded seams ground smooth.
- Door stiffeners are provided where required for increased strength and rigidity - designed to also permit additional mounting options.
- Formed lip on enclosure to exclude flowing liquids and contaminants.
- Door latches feature the added safety of quarter turn slot requiring use of tool for opening.
- Doors may be easily removed for modifications and are interchangeable.
- Seamless poured-in place gasket.
- Collar studs provided for mounting inner panel.
- Includes hardware kit with panel mounting nuts and sealing washers for wall mounting holes.
- Bonding stud provided on door and grounding stud installed in enclosure.
- Stainless steel 3 point latching handle (where applicable).
- Stainless steel hinge pins and quarter turns.
- Door alignment guide provided on 36" wide enclosures.

## Finish

- Cover and enclosure are natural stainless steel with a smooth brushed finish.

## Accessories

Cooling Products
Ventilation
DIN Rail Mounting Kit
Drip Shield Kit
Heaters
Inner Panels
Literature Pocket
Padlock Adaptor
Swing Frame
Replacement Hinge Pins
Temperature Controls
Type 4 Hardware Kits

Blowers and Fans
DIN Rails
Door Stop Kit
Filtered Fans
Handles
Quarter Turn Inserts and Keys
Mounting Foot Kit
Swing Panel
Rear Hole Plugs
Quarter Turn Assemblies
Touch-Up Spray Paint

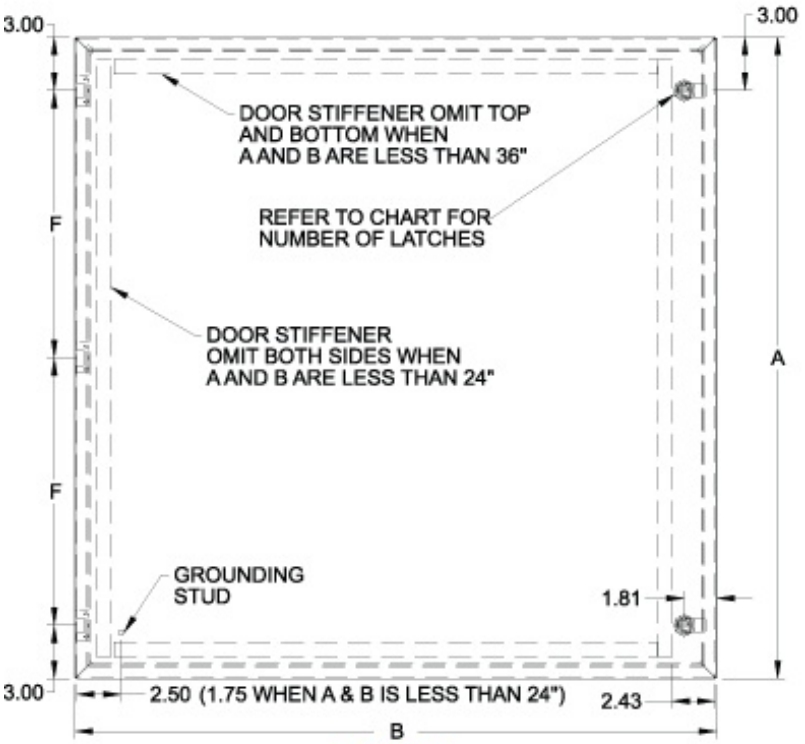


Front View

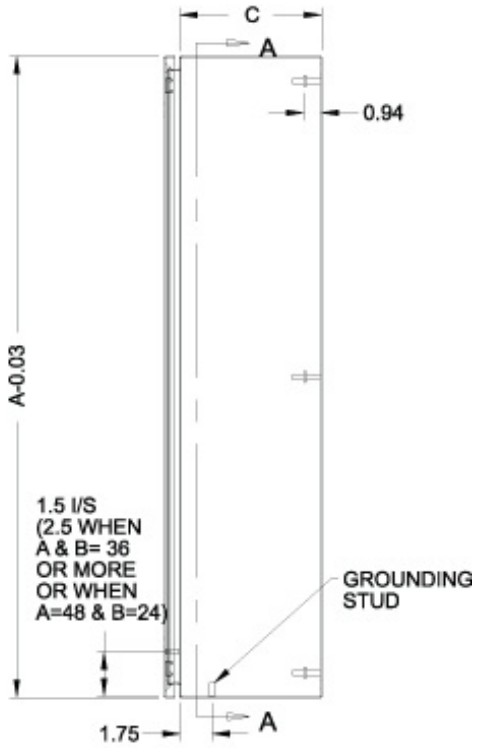


Side View

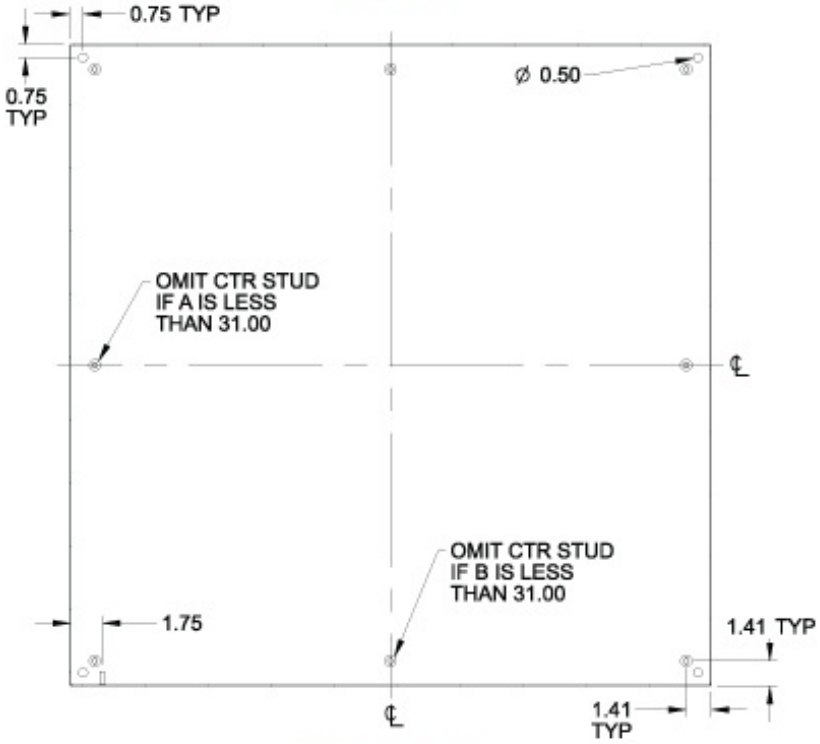


SECTION A-A

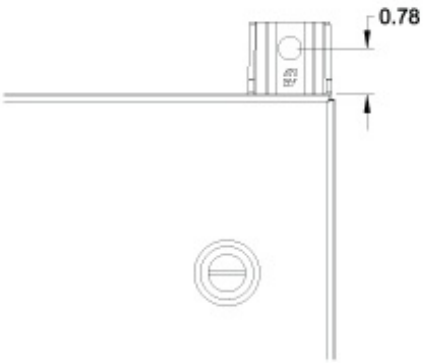


Mounting Foot Detail

| 304 S.S. Part No. | 316 S.S. Part No. | Overall Dimensions A | B | C | Door/Body Gauge | Latches Qty | Type | Opt. Panel Part No. | Panel Size D | E | Hinges | F | Ship Wt. (lbs) |
|---|---|---|---|---|---|---|---|---|---|---|---|---|---|
| **EN4SD12126SS** | **EN4SD12126S16** | 12.00 | 12.00 | 6.00 | 16 | 1 | Qtr Turn | **EP1212** | 10.20 | 10.20 | 2 | 6.00 | 12 |
| **EN4SD16126SS** | **EN4SD16126S16** | 16.00 | 12.00 | 6.00 | 16 | 1 | Qtr Turn | **EP1612** | 14.20 | 10.20 | 2 | 10.00 | 16 |
| **EN4SD16166SS** | **EN4SD16166S16** | 16.00 | 16.00 | 6.00 | 16 | 1 | Qtr Turn | **EP1616** | 14.20 | 14.20 | 2 | 10.00 | 19 |
| **EN4SD16206SS** | - | 16.00 | 20.00 | 6.00 | 16 | 1 | Qtr | **EP1620** | 14.20 | 18.20 | 2 | 10.00 | 22 |

| | | | | | | | | | | | | |
|---|---|---|---|---|---|---|---|---|---|---|---|---|
| **EN4SD16206SS** | **-** | 16.00 | 20.00 | 6.00 | 16 | 1 | Qtr Turn | **EP1620** | 14.20 | 18.20 | 2 | 10.00 | 22 |
| **EN4SD20166SS** | **EN4SD20166S16** | 20.00 | 16.00 | 6.00 | 16 | 1 | Qtr Turn | **EP2016** | 18.20 | 14.20 | 2 | 14.00 | 22 |
| **EN4SD20206SS** | **-** | 20.00 | 20.00 | 6.00 | 16 | 1 | Qtr Turn | **EP2020** | 18.20 | 18.20 | 2 | 14.00 | 26 |
| **EN4SD24206SS** | **EN4SD20206S16** | 24.00 | 20.00 | 6.00 | 16 | 1 | Qtr Turn | **EP2420** | 22.20 | 18.20 | 2 | 18.00 | 30 |
| **EN4SD16128SS** | **EN4SD16128S16** | 16.00 | 12.00 | 8.00 | 16 | 1 | Qtr Turn | **EP1612** | 14.20 | 10.20 | 2 | 10.00 | 16 |
| **EN4SD16168SS** | **EN4SD16168S16** | 16.00 | 16.00 | 8.00 | 16 | 1 | Qtr Turn | **EP1616** | 14.20 | 14.20 | 2 | 10.00 | 21 |
| **EN4SD16208SS** | **EN4SD16208S16** | 16.00 | 20.00 | 8.00 | 16 | 1 | Qtr Turn | **EP1620** | 14.20 | 18.20 | 2 | 10.00 | 25 |
| **EN4SD20168SS** | **EN4SD20168S16** | 20.00 | 16.00 | 8.00 | 16 | 1 | Qtr Turn | **EP2016** | 18.20 | 14.20 | 2 | 14.00 | 25 |
| **EN4SD20208SS** | **EN4SD20208S16** | 20.00 | 20.00 | 8.00 | 16 | 1 | Qtr Turn | **EP2020** | 18.20 | 18.20 | 2 | 14.00 | 28 |
| **EN4SD20248SS** | **-** | 20.00 | 24.00 | 8.00 | 16 | 1 | Qtr Turn | **EP2024** | 18.20 | 22.20 | 2 | 14.00 | 32 |
| **EN4SD24168SS** | **EN4SD24168S16** | 24.00 | 16.00 | 8.00 | 16 | 1 | Qtr Turn | **EP2416** | 22.20 | 14.20 | 2 | 18.00 | 26 |
| **EN4SD24208SS** | **EN4SD24208S16** | 24.00 | 20.00 | 8.00 | 16 | 1 | Qtr Turn | **EP2420** | 22.20 | 18.20 | 2 | 18.00 | 32 |
| **EN4SD24248SS** | **EN4SD24248S16** | 24.00 | 24.00 | 8.00 | 14 | 2 | Qtr Turn | **EP2424** | 22.20 | 22.20 | 2 | 18.00 | 40 |
| **EN4SD24308SS** | **-** | 24.00 | 30.00 | 8.00 | 14 | 2 | Qtr Turn | **EP2430** | 22.20 | 28.20 | 2 | 18.00 | 48 |
| **EN4SD30208SS** | **-** | 30.00 | 20.00 | 8.00 | 14 | 2 | Qtr Turn | **EP3020** | 28.20 | 18.20 | 3 | 12.00 | 42 |
| **EN4SD30248SS** | **EN4SD30248S16** | 30.00 | 24.00 | 8.00 | 14 | 2 | Qtr Turn | **EP3024** | 28.20 | 22.20 | 3 | 12.00 | 46 |
| **EN4SD30308SS** | **EN4SD30308S16** | 30.00 | 30.00 | 8.00 | 14 | 2 | Qtr Turn | **EP3030** | 28.20 | 28.20 | 3 | 12.00 | 67 |
| **EN4SD36248SS** | **EN4SD36248S16** | 36.00 | 24.00 | 8.00 | 14 | 2 | Qtr Turn | **EP3624** | 34.20 | 22.20 | 3 | 15.00 | 55 |
| **EN4SD36308SS** | **EN4SD36308S16** | 36.00 | 30.00 | 8.00 | 14 | 2 | Qtr Turn | **EP3630** | 34.20 | 28.20 | 3 | 15.00 | 77 |
| **EN4SD42368SSR** | **-** | 42.00 | 36.00 | 8.00 | 14 | 5 | Qtr Turn | **EP4236** | 40.20 | 34.20 | 4 | 12.00 | 106 |
| **EN4SD48368SSR** | **-** | 48.00 | 36.00 | 8.00 | 14 | 5 | Qtr Turn | **EP4836** | 46.20 | 34.20 | 4 | 14.00 | 124 |
| **EN4SD161210SS** | **EN4SD161210S16** | 16.00 | 12.00 | 10.00 | 16 | 1 | Qtr Turn | **EP1612** | 14.20 | 10.20 | 2 | 10.00 | 18 |
| **EN4SD161610SS** | **EN4SD161610S16** | 16.00 | 16.00 | 10.00 | 16 | 1 | Qtr Turn | **EP1616** | 14.20 | 14.20 | 2 | 10.00 | 23 |
| **EN4SD162010SS** | **EN4SD162010S16** | 16.00 | 20.00 | 10.00 | 16 | 1 | Qtr Turn | **EP1620** | 14.20 | 18.20 | 2 | 10.00 | 28 |
| **EN4SD201610SS** | **EN4SD201610S16** | 20.00 | 16.00 | 10.00 | 16 | 1 | Qtr Turn | **EP2016** | 18.20 | 14.20 | 2 | 14.00 | 28 |
| **EN4SD202010SS** | **EN4SD202010S16** | 20.00 | 20.00 | 10.00 | 16 | 1 | Qtr Turn | **EP2020** | 18.20 | 18.20 | 2 | 14.00 | 31 |
| **EN4SD202410SS** | **EN4SD202410S16** | 20.00 | 24.00 | 10.00 | 16 | 1 | Qtr Turn | **EP2024** | 18.20 | 22.20 | 2 | 14.00 | 38 |
| **EN4SD241610SS** | **EN4SD241610S16** | 24.00 | 16.00 | 10.00 | 16 | 1 | Qtr Turn | **EP2416** | 22.20 | 14.20 | 2 | 18.00 | 30 |
| **EN4SD242010SS** | **EN4SD242010S16** | 24.00 | 20.00 | 10.00 | 16 | 1 | Qtr Turn | **EP2420** | 22.20 | 18.20 | 2 | 18.00 | 38 |
| **EN4SD242410SS** | **EN4SD242410S16** | 24.00 | 24.00 | 10.00 | 14 | 2 | Qtr Turn | **EP2424** | 22.20 | 22.20 | 2 | 18.00 | 45 |
| **EN4SD243010SS** | **EN4SD243010S16** | 24.00 | 30.00 | 10.00 | 14 | 2 | Qtr | **EP2430** | 22.20 | 28.20 | 2 | 18.00 | 53 |

| | | | | | | | | | | | | | |
|---|---|---|---|---|---|---|---|---|---|---|---|---|---|
| **EN4SD302010SS** | **EN4SD302010S16** | 30.00 | 20.00 | 10.00 | 14 | 2 | Qtr Turn | **EP3020** | 28.20 | 18.20 | 3 | 12.00 | 47 |
| **EN4SD302410SS** | **EN4SD302410S16** | 30.00 | 24.00 | 10.00 | 14 | 2 | Qtr Turn | **EP3024** | 28.20 | 22.20 | 3 | 12.00 | 53 |
| **EN4SD303010SS** | **EN4SD303010S16** | 30.00 | 30.00 | 10.00 | 14 | 2 | Qtr Turn | **EP3030** | 28.20 | 28.20 | 3 | 12.00 | 75 |
| **EN4SD362410SS** | **EN4SD362410S16** | 36.00 | 24.00 | 10.00 | 14 | 2 | Qtr Turn | **EP3624** | 34.20 | 22.20 | 3 | 15.00 | 62 |
| **EN4SD363010SS** | **EN4SD363010S16** | 36.00 | 30.00 | 10.00 | 14 | 2 | Qtr Turn | **EP3630** | 34.20 | 28.20 | 3 | 15.00 | 83 |
| **EN4SD423010SSR** | - | 42.00 | 30.00 | 10.00 | 14 | 5 | Qtr Turn | **EP4230** | 40.20 | 28.20 | 4 | 12.00 | 110 |
| **EN4SD482410SS** | **EN4SD482410S16** | 48.00 | 24.00 | 10.00 | 14 | 1 | 3-point | **EP4824** | 46.20 | 26.20 | 4 | 14.00 | 95 |
| **EN4SD202012SS** | **EN4SD202012S16** | 20.00 | 20.00 | 12.00 | 16 | 1 | Qtr Turn | **EP2020** | 18.20 | 18.20 | 2 | 14.00 | 34 |
| **EN4SD242412SS** | **EN4SD242412S16** | 24.00 | 24.00 | 12.00 | 14 | 2 | Qtr Turn | **EP2424** | 22.20 | 22.20 | 2 | 18.00 | 47 |
| **EN4SD302412SS** | **EN4SD302412S16** | 30.00 | 24.00 | 12.00 | 14 | 2 | Qtr Turn | **EP3024** | 28.20 | 22.20 | 3 | 12.00 | 57 |
| **EN4SD362412SS** | **EN4SD362412S16** | 36.00 | 24.00 | 12.00 | 14 | 2 | Qtr Turn | **EP3624** | 34.20 | 22.20 | 3 | 15.00 | 62 |
| **EN4SD363012SS** | **EN4SD363012S16** | 36.00 | 30.00 | 12.00 | 14 | 2 | Qtr Turn | **EP3630** | 34.20 | 28.20 | 3 | 15.00 | 95 |
| **EN4SD363612SS** | **EN4SD363612S16** | 36.00 | 36.00 | 12.00 | 14 | 2 | Qtr Turn | **EP3636** | 34.20 | 34.20 | 3 | 15.00 | 104 |
| **EN4SD423612SSR** | - | 42.00 | 36.00 | 12.00 | 14 | 5 | Qtr Turn | **EP4236** | 40.20 | 34.20 | 4 | 12.00 | 121 |
| **EN4SD483612SSR** | - | 48.00 | 36.00 | 12.00 | 14 | 5 | Qtr Turn | **EP4836** | 46.20 | 34.20 | 4 | 14.00 | 148 |
| **EN4SD603612SSR** | - | 60.00 | 36.00 | 12.00 | 14 | 5 | Qtr Turn | **EP6036** | 58.20 | 34.20 | 4 | 18.00 | 162 |
| **EN4SD302416SS** | - | 30.00 | 24.00 | 16.00 | 14 | 2 | Qtr Turn | **EP3024** | 28.20 | 22.20 | 3 | 12.00 | 60 |
| **EN4SD363016SS** | - | 36.00 | 30.00 | 16.00 | 14 | 2 | Qtr Turn | **EP3630** | 34.20 | 28.20 | 3 | 15.00 | 89 |
| **EN4SD483616SSR** | **EN4SD483616S16R** | 48.00 | 36.00 | 16.00 | 14 | 5 | Qtr Turn | **EP4836** | 46.20 | 34.20 | 4 | 14.00 | 135 |

*Data subject to change without notice.*

© 2014. Hammond Manufacturing Ltd. All rights reserved.