HAMMOND MANUFACTURING

Quality Products. Service Excellence.

Type 4 Mild Steel Wallmount Enclosure *Eclipse Series*

Hinge Door with Quarter Turn/Handle







Panel Sold Separately

Application

- Designed to enclose electrical and/or electronic equipment and protect against harsh, industrial environments for wallmount applications.
- Impressive styling features like hidden hinges, attractive latching systems make the Eclipse a suitable addition to any high-tech equipment installation.
- A wide range of sizes and practical accessories make this product line a complete package.

Standards

- UL 508 Type 3R, 4, and 12
- CSA Type 3R, 4, and 12
- Complies with
  - NEMA Type 3R, 4, and 12
  - IEC 60529, IP66

Construction

- Formed 14 or 16 gauge steel.
- Smooth, continuously welded seams ground smooth.
- Door stiffeners are provided where required for increased strength and rigidity - designed to also permit additional mounting options.
- Formed lip on enclosure to exclude flowing liquids and contaminants.
- Door latches feature the added safety of quarter turn slot requiring use of tool for opening.
- Doors may be easily removed for modifications and are interchangeable.
- Seamless poured-in place gasket.
- Collar studs provided for mounting inner panel.
- Includes hardware kit with panel mounting nuts and sealing washers for wall mounting holes.
- Bonding stud provided on door and grounding stud installed in enclosure.
- Hinges are constructed from 304 stainless steel.
- Hinge pins are stainless steel.
- Quarter turn latch and multi-point handle (key lockable) are zinc diecast with black epoxy finish.
- Door alignment guide provided on 36" wide enclosures.

Finish

- Cover and enclosure are phosphatized and finished with a recoatable powder inside and out with choice of ANSI 61 smooth Gray (GY) or RAL7035 textured light gray (LG).

Accessories

- Cooling Products
- Ventilation
- DIN Rail Mounting Kit
- Door Stop Kit
- Gland Plates
- Inner Panels
- Quarter Turn Inserts and Keys
- Mounting Foot Kit
- Swing Frame
- Rear Hole Plugs
- Quarter Turn Assemblies
- Touch-Up Spray Paint
- Padlock Adaptor
- Blowers and Fans
- DIN Rails
- Drip Shield Kit
- Filtered Fans
- Heaters
- Handles
- Literature Pocket
- Swing Panel
- Eclipse Rack Panel
- Replacement Hinge Pins
- Temperature Controls
- Type 4 Hardware Kits

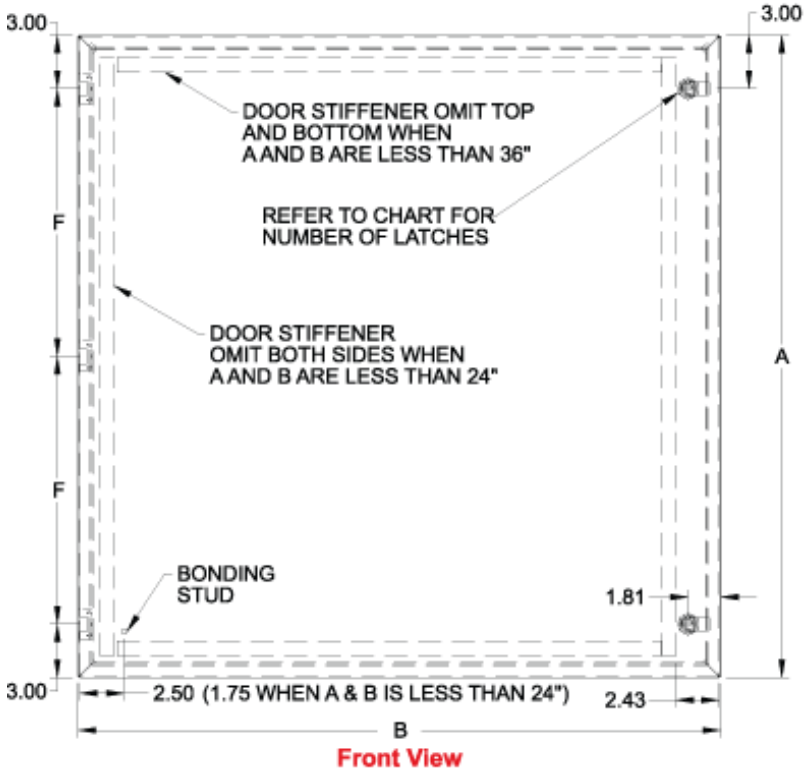

Front View

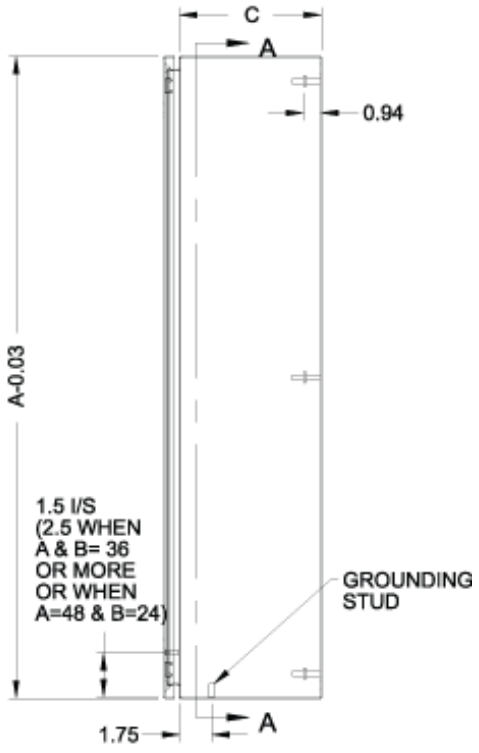

Side View

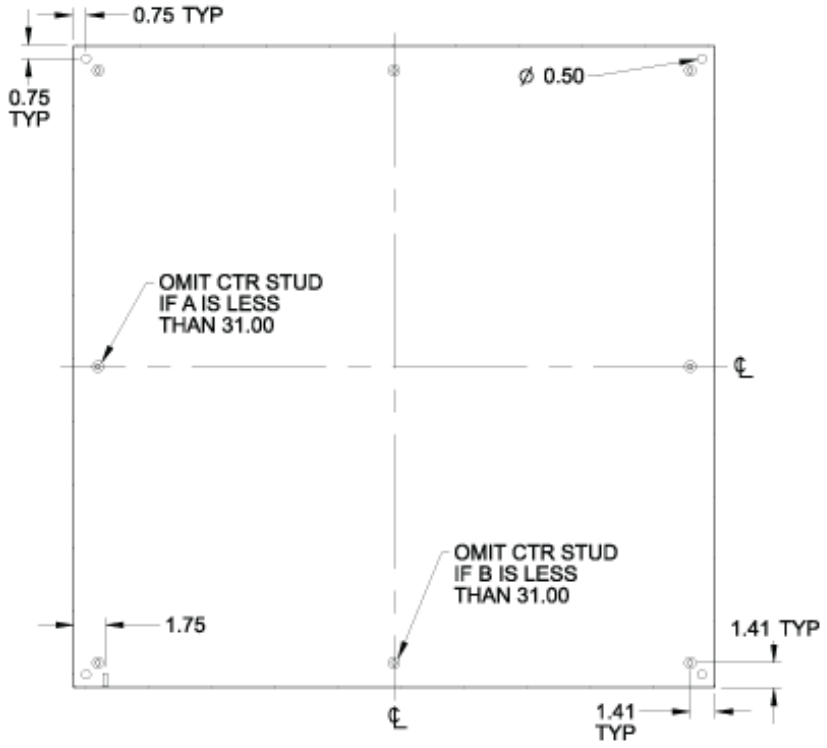

SECTION A-A

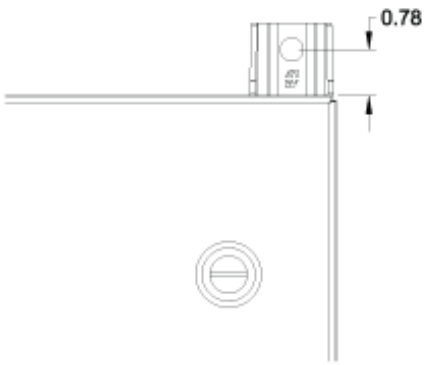

Mounting Foot Detail

Part No. (ANSI 61 Gray)	Part No. (RAL 7035 Light Gray)	Overall Dimensions A	B	C	Door/Body Gauge	Latches Qty	Type	Opt. Panel Part No.	Panel Size D	E	# Hinges	F	Ship Wt. (lbs)
EN4SD12126GY	**EN4SD12126LG**	12.00	12.00	6.00	16	1	Qtr Turn	**EP1212**	10.20	10.20	2	6.00	12
EN4SD12246GY	**EN4SD12246LG**	12.00	24.00	6.00	16	1	Qtr Turn	**EP1224**	10.20	22.20	2	18.00	24
EN4SD16126GY	**EN4SD16126LG**	16.00	12.00	6.00	16	1	Qtr Turn	**EP1612**	14.20	10.20	2	10.00	16
EN4SD16166GY	**EN4SD16166LG**	16.00	16.00	6.00	16	1	Qtr Turn	**EP1616**	14.20	14.20	2	10.00	19
EN4SD16206GY	**EN4SD16206LG**	16.00	20.00	6.00	16	1	Qtr Turn	**EP1620**	14.20	18.20	2	10.00	22
EN4SD20126GY	**EN4SD20126LG**	20.00	12.00	6.00	16	1	Qtr Turn	**EP2012**	18.20	10.20	2	14.00	20

Part No. (ANSI 61 Gray)	Part No. (RAL 7035 Light Gray)	Overall Dimensions A	B	C	Door/Body Gauge	Latches Qty	Type	Opt. Panel Part No.	Panel Size D	E	# Hinges	F	Ship Wt. (lbs)
EN4SD20166GY	**EN4SD20166LG**	20.00	16.00	6.00	16	1	Qtr Turn	**EP2016**	18.20	14.20	2	14.00	22
EN4SD20206GY	**EN4SD20206LG**	20.00	20.00	6.00	16	1	Qtr Turn	**EP2020**	18.20	18.20	2	14.00	26
EN4SD20246GY	**EN4SD20246LG**	20.00	24.00	6.00	16	1	Qtr Turn	**EP2024**	22.20	10.20	2	14.00	32
EN4SD24126GY	**EN4SD24126LG**	24.00	12.00	6.00	16	1	Qtr Turn	**EP2412**	22.20	10.20	2	18.00	24
EN4SD24166GY	**EN4SD24166LG**	24.00	16.00	6.00	16	1	Qtr Turn	**EP2416**	22.20	14.20	2	18.00	26
EN4SD24206GY	**EN4SD24206LG**	24.00	20.00	6.00	16	1	Qtr Turn	**EP2420**	22.20	18.20	2	18.00	30
EN4SD24246GY	**EN4SD24246LG**	24.00	24.00	6.00	14	2	Qtr Turn	**EP2424**	22.20	22.20	2	18.00	37
EN4SD30166GY	**EN4SD30166LG**	30.00	16.00	6.00	14	2	Qtr Turn	**EP3016**	28.20	14.20	3	12.00	35
EN4SD30206GY	**EN4SD30206LG**	30.00	20.00	6.00	14	2	Qtr Turn	**EP3020**	28.20	18.20	3	12.00	38
EN4SD30246GY	**EN4SD30246LG**	30.00	24.00	6.00	14	2	Qtr Turn	**EP3024**	28.20	22.20	3	12.00	40
EN4SD36246GY	**EN4SD36246LG**	36.00	24.00	6.00	14	2	Qtr Turn	**EP3624**	34.20	22.20	3	15.00	52
EN4SD36306GY	**EN4SD36306LG**	36.00	30.00	6.00	14	2	Qtr Turn	**EP3630**	34.20	28.20	3	15.00	60
EN4SD12248GY	**EN4SD12248LG**	12.00	24.00	8.00	16	1	Qtr Turn	**EP1224**	10.20	22.20	2	6.00	25
EN4SD16128GY	**EN4SD16128LG**	16.00	12.00	8.00	16	1	Qtr Turn	**EP1612**	14.20	10.20	2	10.00	16
EN4SD16168GY	**EN4SD16168LG**	16.00	16.00	8.00	16	1	Qtr Turn	**EP1616**	14.20	14.20	2	10.00	21
EN4SD16208GY	**EN4SD16208LG**	16.00	20.00	8.00	16	1	Qtr Turn	**EP1620**	14.20	18.20	2	10.00	25
EN4SD20128GY	**EN4SD20128LG**	20.00	12.00	8.00	16	1	Qtr Turn	**EP2012**	18.20	10.20	2	14.00	22
EN4SD20168GY	**EN4SD20168LG**	20.00	16.00	8.00	16	1	Qtr Turn	**EP2016**	18.20	14.20	2	14.00	25
EN4SD20208GY	**EN4SD20208LG**	20.00	20.00	8.00	16	1	Qtr Turn	**EP2020**	18.20	18.20	2	14.00	28
EN4SD20248GY	**EN4SD20248LG**	20.00	24.00	8.00	16	1	Qtr Turn	**EP2024**	18.20	22.20	2	14.00	32
EN4SD24128GY	**EN4SD24128LG**	24.00	12.00	8.00	16	1	Qtr Turn	**EP2412**	22.20	10.20	2	18.00	25
EN4SD24168GY	**EN4SD24168LG**	24.00	16.00	8.00	16	1	Qtr Turn	**EP2416**	22.20	14.20	2	18.00	26
EN4SD24208GY	**EN4SD24208LG**	24.00	20.00	8.00	16	1	Qtr Turn	**EP2420**	22.20	18.20	2	18.00	32
EN4SD24248GY	**EN4SD24248LG**	24.00	24.00	8.00	14	2	Qtr Turn	**EP2424**	22.20	22.20	2	18.00	40
EN4SD24308GY	**EN4SD24308LG**	24.00	30.00	8.00	14	2	Qtr Turn	**EP2430**	22.20	28.20	2	18.00	48
EN4SD30128GY	**EN4SD30128LG**	30.00	12.00	8.00	14	2	Qtr Turn	**EP3012**	28.20	10.20	3	12.00	34
EN4SD30168GY	**EN4SD30168LG**	30.00	16.00	8.00	14	2	Qtr Turn	**EP3016**	28.20	14.20	3	12.00	40
EN4SD30208GY	**EN4SD30208LG**	30.00	20.00	8.00	14	2	Qtr Turn	**EP3020**	28.20	18.20	3	12.00	42
EN4SD30248GY	**EN4SD30248LG**	30.00	24.00	8.00	14	2	Qtr Turn	**EP3024**	28.20	22.20	3	12.00	46
EN4SD30308GY	**EN4SD30308LG**	30.00	30.00	8.00	14	2	Qtr Turn	**EP3030**	28.20	28.20	3	12.00	67
EN4SD30368GY	**EN4SD30368LG**	30.00	36.00	8.00	14	2	Qtr Turn	**EP3036**	28.20	34.20	3	12.00	77
EN4SD36248GY	**EN4SD36248LG**	36.00	24.00	8.00	14	2	Qtr Turn	**EP3624**	34.20	22.20	3	15.00	55
EN4SD36308GY	**EN4SD36308LG**	36.00	30.00	8.00	14	2	Qtr Turn	**EP3630**	34.20	28.20	3	15.00	77
EN4SD36368GY	**EN4SD36368LG**	36.00	36.00	8.00	14	2	Qtr Turn	**EP3636**	34.20	34.20	3	15.00	94
EN4SD42248GY	**EN4SD42248LG**	42.00	24.00	8.00	14	1	3-point	**EP4224**	40.20	22.20	4	12.00	80
EN4SD42308GY	**EN4SD42308LG**	42.00	30.00	8.00	14	1	3-point	**EP4230**	40.20	28.20	4	12.00	95
EN4SD42368GY	**EN4SD42368LG**	42.00	36.00	8.00	14	1	3-point	**EP4236**	40.20	34.20	4	12.00	105
EN4SD48248GY	**EN4SD48248LG**	48.00	24.00	8.00	14	1	3-point	**EP4824**	46.20	22.20	4	14.00	110
EN4SD48308GY	**EN4SD48308LG**	48.00	30.00	8.00	14	1	3-point	**EP4830**	46.20	28.20	4	14.00	115
EN4SD48368GY	**EN4SD48368LG**	48.00	36.00	8.00	14	1	3-point	**EP4836**	46.20	34.20	4	14.00	120
EN4SD60368GY	**EN4SD60368LG**	60.00	36.00	8.00	14	1	3-point	**EP6036**	58.20	34.20	4	18.00	150
EN4SD161210GY	**EN4SD161210LG**	16.00	12.00	10.00	16	1	Qtr. Turn	**EP1612**	14.20	10.20	2	10.00	18
EN4SD161610GY	**EN4SD161610LG**	16.00	16.00	10.00	16	1	Qtr. Turn	**EP1616**	14.20	14.20	2	10.00	23
EN4SD162010GY	**EN4SD162010LG**	16.00	20.00	10.00	16	1	Qtr. Turn	**EP1620**	14.20	18.20	2	10.00	28
EN4SD201610GY	**EN4SD201610LG**	20.00	16.00	10.00	16	1	Qtr. Turn	**EP2016**	18.20	14.20	2	14.00	28
EN4SD202010GY	**EN4SD202010LG**	20.00	20.00	10.00	16	1	Qtr. Turn	**EP2020**	18.20	18.20	2	14.00	31

Part No. (ANSI 61 Gray)	Part No. (RAL 7035 Light Gray)	Overall Dimensions A	B	C	Door/Body Gauge	Latches Qty	Type	Opt. Panel Part No.	Panel Size D	E	# Hinges	F	Ship Wt. (lbs)
EN4SD202410GY	**EN4SD202410LG**	20.00	24.00	10.00	16	1	Qtr. Turn	**EP2024**	18.20	22.20	2	14.00	36
EN4SD241210GY	**EN4SD241210LG**	24.00	12.00	10.00	16	1	Qtr Turn	**EP2412**	22.20	10.20	2	18.00	26
EN4SD241610GY	**EN4SD241610LG**	24.00	16.00	10.00	16	1	Qtr. Turn	**EP2416**	22.20	14.20	2	18.00	30
EN4SD242010GY	**EN4SD242010LG**	24.00	20.00	10.00	16	1	Qtr. Turn	**EP2420**	22.20	18.20	2	18.00	36
EN4SD242410GY	**EN4SD242410LG**	24.00	24.00	10.00	14	2	Qtr. Turn	**EP2424**	22.20	22.20	2	18.00	45
EN4SD243010GY	**EN4SD243010LG**	24.00	30.00	10.00	14	2	Qtr. Turn	**EP2430**	22.20	28.20	2	18.00	53
EN4SD302010GY	**EN4SD302010LG**	30.00	20.00	10.00	14	2	Qtr. Turn	**EP3020**	28.20	18.20	3	12.00	47
EN4SD302410GY	**EN4SD302410LG**	30.00	24.00	10.00	14	2	Qtr. Turn	**EP3024**	28.20	22.20	3	12.00	53
EN4SD303010GY	**EN4SD303010LG**	30.00	30.00	10.00	14	2	Qtr. Turn	**EP3030**	28.20	28.20	3	12.00	75
EN4SD362410GY	**EN4SD362410LG**	36.00	24.00	10.00	14	2	Qtr. Turn	**EP3624**	34.20	22.20	3	15.00	70
EN4SD363010GY	**EN4SD363010LG**	36.00	30.00	10.00	14	2	Qtr. Turn	**EP3630**	34.20	28.20	3	15.00	84
EN4SD363610GY	**EN4SD363610LG**	36.00	36.00	10.00	14	2	Qtr. Turn	**EP3636**	34.20	34.20	3	15.00	100
EN4SD423010GY	**EN4SD423010LG**	42.00	30.00	10.00	14	1	3-point	**EP4230**	40.20	28.20	4	12.00	107
EN4SD423610GY	**EN4SD423610LG**	42.00	36.00	10.00	14	1	3-point	**EP4236**	40.20	34.20	4	12.00	117
EN4SD482410GY	**EN4SD482410LG**	48.00	24.00	10.00	14	1	3-point	**EP4824**	46.20	22.20	4	14.00	95
EN4SD483010GY	**EN4SD483010LG**	48.00	30.00	10.00	14	1	3-point	**EP4830**	46.20	28.20	4	14.00	120
EN4SD483610GY	**EN4SD483610LG**	48.00	36.00	10.00	14	1	3-point	**EP4836**	46.20	34.20	4	14.00	125
EN4SD603610GY	**EN4SD603610LG**	60.00	36.00	10.00	14	1	3-point	**EP6036**	58.20	34.20	4	18.00	150
EN4SD201612GY	**EN4SD201612LG**	20.00	16.00	12.00	16	1	Qtr Turn	**EP2016**	18.20	14.20	2	14.00	32
EN4SD202012GY	**EN4SD202012LG**	20.00	20.00	12.00	16	1	Qtr Turn	**EP2020**	18.20	18.20	2	14.00	34
EN4SD242012GY	**EN4SD242012LG**	24.00	20.00	12.00	16	1	Qtr Turn	**EP2420**	22.20	18.20	2	18.00	38
EN4SD242412GY	**EN4SD242412LG**	24.00	24.00	12.00	14	2	Qtr Turn	**EP2424**	22.20	22.20	2	18.00	47
EN4SD302412GY	**EN4SD302412LG**	30.00	24.00	12.00	14	2	Qtr Turn	**EP3024**	28.20	22.20	3	12.00	57
EN4SD303012GY	**EN4SD303012LG**	30.00	30.00	12.00	14	2	Qtr Turn	**EP3030**	28.20	28.20	3	12.00	80
EN4SD362412GY	**EN4SD362412LG**	36.00	24.00	12.00	14	2	Qtr Turn	**EP3624**	34.20	22.20	3	15.00	62
EN4SD363012GY	**EN4SD363012LG**	36.00	30.00	12.00	14	2	Qtr Turn	**EP3630**	34.20	28.20	3	15.00	91
EN4SD363612GY	**EN4SD363612LG**	36.00	36.00	12.00	14	2	Qtr Turn	**EP3636**	34.20	34.20	3	15.00	104
EN4SD423012GY	**EN4SD423012LG**	42.00	30.00	12.00	14	1	3-point	**EP4230**	40.20	28.20	4	12.00	111
EN4SD423612GY	**EN4SD423612LG**	42.00	36.00	12.00	14	1	3-point	**EP4236**	40.20	34.20	4	12.00	121
EN4SD482412GY	**EN4SD482412LG**	48.00	24.00	12.00	14	1	3-point	**EP4824**	46.20	22.20	4	14.00	98
EN4SD483612GY	**EN4SD483612LG**	48.00	36.00	12.00	14	1	3-point	**EP4836**	46.20	34.20	4	14.00	148
EN4SD603612GY	**EN4SD603612LG**	60.00	36.00	12.00	14	1	3-point	**EP6036**	58.20	34.20	4	18.00	165
EN4SD723012GY	**EN4SD723012LG**	72.00	30.00	12.00	14	2	Qtr Turn, 5-point	**EP7230**	70.20	28.20	5	16.50	190
EN4SD723612GY	**EN4SD723612LG**	72.00	36.00	12.00	14	2	Qtr Turn, 5-point	**EP7236**	70.20	34.20	5	16.50	195
EN4SD242016GY	**EN4SD242016LG**	24.00	20.00	16.00	16	1	Qtr Turn	**EP2420**	22.20	18.20	2	18.00	52
EN4SD242416GY	**EN4SD242416LG**	24.00	24.00	16.00	14	2	Qtr Turn	**EP2424**	22.20	22.20	2	18.00	66
EN4SD302416GY	**EN4SD302416LG**	30.00	24.00	16.00	14	2	Qtr Turn	**EP3024**	28.20	22.20	3	12.00	85
EN4SD363016GY	**EN4SD363016LG**	36.00	30.00	16.00	14	2	Qtr Turn	**EP3630**	34.20	28.20	3	15.00	102
EN4SD423616GY	**EN4SD423616LG**	42.00	36.00	16.00	14	1	3-point	**EP4236**	40.20	34.20	4	12.00	140

Part No. (ANSI 61 Gray)	Part No. (RAL 7035 Light Gray)	Overall Dimensions A	B	C	Door/Body Gauge	Latches Qty	Type	Opt. Panel Part No.	Panel Size D	E	# Hinges	F	Ship Wt. (lbs)
EN4SD483616GY	**EN4SD483616LG**	48.00	36.00	16.00	14	1	3-point	**EP4836**	46.20	34.20	4	14.00	148
EN4SD603616GY	**EN4SD603616LG**	60.00	36.00	16.00	14	1	3-point	**EP6036**	58.20	34.20	4	18.00	200
EN4SD723016GY	**EN4SD723016LG**	72.00	30.00	16.00	14	2	Qtr Turn, 5-point	**EP7230**	70.20	28.20	5	16.50	215
EN4SD723616GY	**EN4SD723616LG**	72.00	36.00	16.00	14	2	Qtr Turn, 5-point	**EP7236**	70.20	34.20	5	16.50	217
EN4SD242420GY	**EN4SD242420LG**	24.00	24.00	20.00	14	2	Qtr Turn	**EP2424**	22.20	22.20	2	18.00	70
EN4SD302420GY	**EN4SD302420LG**	30.00	24.00	20.00	14	2	Qtr Turn	**EP3024**	28.20	22.20	3	12.00	82
EN4SD363020GY	**EN4SD363020LG**	36.00	30.00	20.00	14	2	Qtr Turn	**EP3630**	34.20	28.20	3	15.00	117
EN4SD483620GY	**EN4SD483620LG**	48.00	36.00	20.00	14	1	3-point	**EP4836**	46.20	34.20	4	14.00	165
EN4SD603620GY	**EN4SD603620LG**	60.00	36.00	20.00	14	1	3-point	**EP6036**	58.20	34.20	4	18.00	210
EN4SD723020GY	**EN4SD723020LG**	72.00	30.00	20.00	14	2	Qtr Turn, 5-point	**EP7230**	70.20	28.20	5	16.50	217
EN4SD302424GY	**EN4SD302424LG**	30.00	24.00	24.00	14	2	Qtr Turn	**EP3024**	28.20	22.20	3	12.00	115
EN4SD723024GY	**EN4SD723024LG**	72.00	30.00	24.00	14	2	Qtr Turn, 5-point	**EP7230**	70.20	28.20	5	16.50	220

Data subject to change without notice

© 2015. Hammond Manufacturing Ltd. All rights reserved.