HAMMOND MANUFACTURING

Quality Products. Service Excellence.

Type 4X Stainless Steel Wallmount Enclosure *Eclipse Series*

Hinge Door with Quarter Turn/Handle



Panel Sold Separately

Application

- Designed to enclose electrical and/or electronic equipment and protect against harsh, industrial environments for wallmount applications.
- Impressive styling features like hidden hinges and attractive latching systems make the Eclipse a suitable addition to any high-tech equipment installation.
- A wide range of sizes and practical accessories make this product line a complete package.

Standards

- UL 508 Type 3R, 4, 4X and 12
- CSA Type 3R, 4, 4X and 12
- Complies with
  - NEMA 3R, 4, 4X, 12 and 13
  - IEC 60529, IP 66

Construction

- Formed 14 or 16 gauge 304 or 316 stainless steel.
- Continuously welded seams ground smooth.
- Door stiffeners are provided where required for increased strength and rigidity - designed to also permit additional mounting options.
- Formed lip on enclosure to exclude flowing liquids and contaminants.
- Door latches feature the added safety of quarter turn slot requiring use of tool for opening.
- Doors may be easily removed for modifications and are interchangeable.
- Seamless poured-in place gasket.
- Collar studs provided for mounting inner panel.
- Includes hardware kit with panel mounting nuts and sealing washers for wall mounting holes.
- Bonding stud provided on door and grounding stud installed in enclosure.
- Stainless steel 3 point latching handle (where applicable).
- Stainless steel hinge pins and quarter turns.
- Door alignment guide provided on 36" wide enclosures.

Finish

- Cover and enclosure are natural stainless steel with a smooth brushed finish.

Accessories

- Cooling Products
- Ventilation
- Blowers and Fans
- DIN Rails

- DIN Rail Mounting Kit
- Drip Shield Kit
- Heaters
- Inner Panels
- Literature Pocket
- Padlock Adaptor
- Swing Frame
- Replacement Hinge Pins
- Temperature Controls
- Type 4 Hardware Kits
- Door Stop Kit
- Filtered Fans
- Handles
- Quarter Turn Inserts and Keys
- Mounting Foot Kit
- Swing Panel
- Rear Hole Plugs
- Quarter Turn Assemblies
- Touch-Up Spray Paint

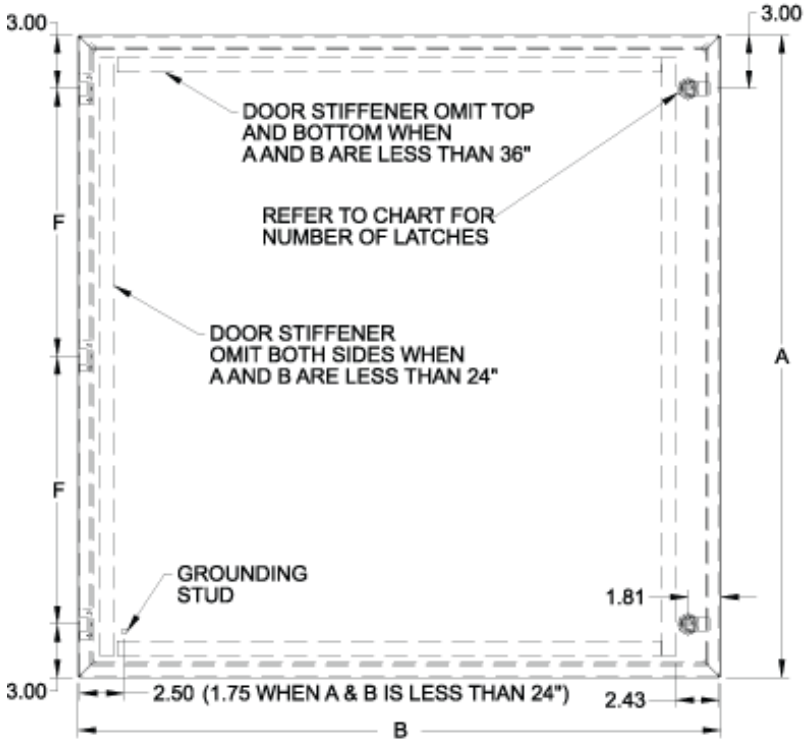

Front View

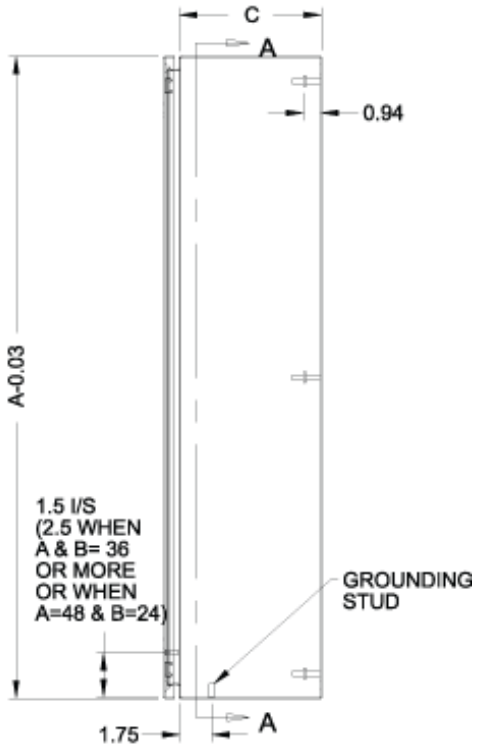

Side View

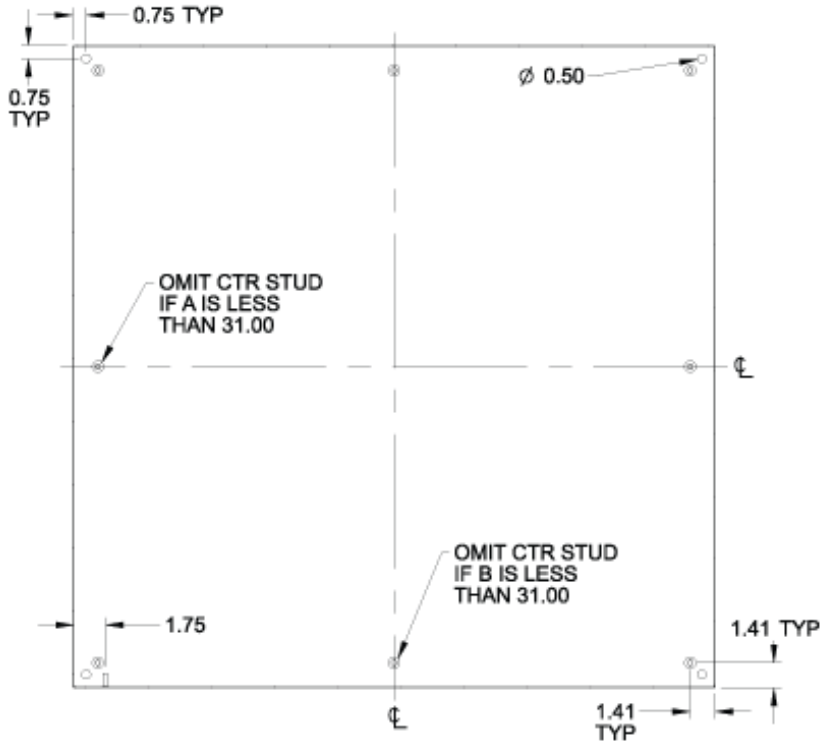

SECTION A-A

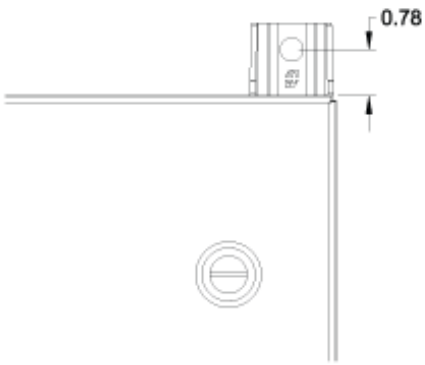

Mounting Foot Detail

304 S.S. Part No.	316 S.S. Part No.	Overall Dimensions A	B	C	Door/Body Latches Gauge	Qty	Type	Opt. Panel Part No.	Panel Size D	E	Hinges	F	Ship Wt. (lbs)
EN4SD12126SS	**EN4SD12126S16**	12.00	12.00	6.00	16	1	Qtr Turn	**EP1212**	10.20	10.20	2	6.00	12
EN4SD16126SS	**EN4SD16126S16**	16.00	12.00	6.00	16	1	Qtr Turn	**EP1612**	14.20	10.20	2	10.00	16
EN4SD16166SS	**EN4SD16166S16**	16.00	16.00	6.00	16	1	Qtr Turn	**EP1616**	14.20	14.20	2	10.00	19

304 S.S. Part No.	316 S.S. Part No.	Overall Dimensions A	B	C	Door/Body Gauge	Latches Qty	Type	Opt. Panel Part No.	Panel Size D	E	Hinges	F	Ship Wt. (lbs)
EN4SD16206SS	**-**	16.00	20.00	6.00	16	1	Qtr Turn	**EP1620**	14.20	18.20	2	10.00	22
EN4SD20166SS	**EN4SD20166S16**	20.00	16.00	6.00	16	1	Qtr Turn	**EP2016**	18.20	14.20	2	14.00	22
EN4SD20206SS	**-**	20.00	20.00	6.00	16	1	Qtr Turn	**EP2020**	18.20	18.20	2	14.00	26
EN4SD24206SS	**EN4SD20206S16**	24.00	20.00	6.00	16	1	Qtr Turn	**EP2420**	22.20	18.20	2	18.00	30
EN4SD16128SS	**EN4SD16128S16**	16.00	12.00	8.00	16	1	Qtr Turn	**EP1612**	14.20	10.20	2	10.00	16
EN4SD16168SS	**EN4SD16168S16**	16.00	16.00	8.00	16	1	Qtr Turn	**EP1616**	14.20	14.20	2	10.00	21
EN4SD16208SS	**EN4SD16208S16**	16.00	20.00	8.00	16	1	Qtr Turn	**EP1620**	14.20	18.20	2	10.00	25
EN4SD20168SS	**EN4SD20168S16**	20.00	16.00	8.00	16	1	Qtr Turn	**EP2016**	18.20	14.20	2	14.00	25
EN4SD20208SS	**EN4SD20208S16**	20.00	20.00	8.00	16	1	Qtr Turn	**EP2020**	18.20	18.20	2	14.00	28
EN4SD20248SS	**-**	20.00	24.00	8.00	16	1	Qtr Turn	**EP2024**	18.20	22.20	2	14.00	32
EN4SD24168SS	**EN4SD24168S16**	24.00	16.00	8.00	16	1	Qtr Turn	**EP2416**	22.20	14.20	2	18.00	26
EN4SD24208SS	**EN4SD24208S16**	24.00	20.00	8.00	16	1	Qtr Turn	**EP2420**	22.20	18.20	2	18.00	32
EN4SD24248SS	**EN4SD24248S16**	24.00	24.00	8.00	14	2	Qtr Turn	**EP2424**	22.20	22.20	2	18.00	40
EN4SD24308SS	**-**	24.00	30.00	8.00	14	2	Qtr Turn	**EP2430**	22.20	28.20	2	18.00	48
EN4SD30208SS	**-**	30.00	20.00	8.00	14	2	Qtr Turn	**EP3020**	28.20	18.20	3	12.00	42
EN4SD30248SS	**EN4SD30248S16**	30.00	24.00	8.00	14	2	Qtr Turn	**EP3024**	28.20	22.20	3	12.00	46
EN4SD30308SS	**EN4SD30308S16**	30.00	30.00	8.00	14	2	Qtr Turn	**EP3030**	28.20	28.20	3	12.00	67
EN4SD36248SS	**EN4SD36248S16**	36.00	24.00	8.00	14	2	Qtr Turn	**EP3624**	34.20	22.20	3	15.00	55
EN4SD36308SS	**EN4SD36308S16**	36.00	30.00	8.00	14	2	Qtr Turn	**EP3630**	34.20	28.20	3	15.00	77
EN4SD42368SSR	**-**	42.00	36.00	8.00	14	5	Qtr Turn	**EP4236**	40.20	34.20	4	12.00	106
EN4SD48368SSR	**-**	48.00	36.00	8.00	14	5	Qtr Turn	**EP4836**	46.20	34.20	4	14.00	124
EN4SD161210SS	**EN4SD161210S16**	16.00	12.00	10.00	16	1	Qtr Turn	**EP1612**	14.20	10.20	2	10.00	18
EN4SD161610SS	**EN4SD161610S16**	16.00	16.00	10.00	16	1	Qtr Turn	**EP1616**	14.20	14.20	2	10.00	23
EN4SD162010SS	**EN4SD162010S16**	16.00	20.00	10.00	16	1	Qtr Turn	**EP1620**	14.20	18.20	2	10.00	28
EN4SD201610SS	**EN4SD201610S16**	20.00	16.00	10.00	16	1	Qtr Turn	**EP2016**	18.20	14.20	2	14.00	28
EN4SD202010SS	**EN4SD202010S16**	20.00	20.00	10.00	16	1	Qtr Turn	**EP2020**	18.20	18.20	2	14.00	31
EN4SD202410SS	**EN4SD202410S16**	20.00	24.00	10.00	16	1	Qtr Turn	**EP2024**	18.20	22.20	2	14.00	38
EN4SD241610SS	**EN4SD241610S16**	24.00	16.00	10.00	16	1	Qtr Turn	**EP2416**	22.20	14.20	2	18.00	30

304 S.S. Part No.	316 S.S. Part No.	Overall Dimensions A	B	C	Door/Body Gauge	Latches Qty	Type	Opt. Panel Part No.	Panel Size D	E	Hinges	F	Ship Wt. (lbs)
EN4SD242010SS	**EN4SD242010S16**	24.00	20.00	10.00	16	1	Qtr Turn	**EP2420**	22.20	18.20	2	18.00	38
EN4SD242410SS	**EN4SD242410S16**	24.00	24.00	10.00	14	2	Qtr Turn	**EP2424**	22.20	22.20	2	18.00	45
EN4SD243010SS	**EN4SD243010S16**	24.00	30.00	10.00	14	2	Qtr Turn	**EP2430**	22.20	28.20	2	18.00	53
EN4SD302010SS	**EN4SD302010S16**	30.00	20.00	10.00	14	2	Qtr Turn	**EP3020**	28.20	18.20	3	12.00	47
EN4SD302410SS	**EN4SD302410S16**	30.00	24.00	10.00	14	2	Qtr Turn	**EP3024**	28.20	22.20	3	12.00	53
EN4SD303010SS	**EN4SD303010S16**	30.00	30.00	10.00	14	2	Qtr Turn	**EP3030**	28.20	28.20	3	12.00	75
EN4SD362410SS	**EN4SD362410S16**	36.00	24.00	10.00	14	2	Qtr Turn	**EP3624**	34.20	22.20	3	15.00	62
EN4SD363010SS	**EN4SD363010S16**	36.00	30.00	10.00	14	2	Qtr Turn	**EP3630**	34.20	28.20	3	15.00	83
EN4SD423010SSR	-	42.00	30.00	10.00	14	5	Qtr Turn	**EP4230**	40.20	28.20	4	12.00	110
EN4SD482410SS	**EN4SD482410S16**	48.00	24.00	10.00	14	1	3-point	**EP4824**	46.20	26.20	4	14.00	95
EN4SD603610SSR	**EN4SD603610S16R**	60.00	36.00	10.00	14	5	Qtr Turn	**EP6036**	58.20	34.20	4	14.00	150
EN4SD202012SS	**EN4SD202012S16**	20.00	20.00	12.00	16	1	Qtr Turn	**EP2020**	18.20	18.20	2	14.00	34
EN4SD242412SS	**EN4SD242412S16**	24.00	24.00	12.00	14	2	Qtr Turn	**EP2424**	22.20	22.20	2	18.00	47
EN4SD302412SS	**EN4SD302412S16**	30.00	24.00	12.00	14	2	Qtr Turn	**EP3024**	28.20	22.20	3	12.00	57
EN4SD362412SS	**EN4SD362412S16**	36.00	24.00	12.00	14	2	Qtr Turn	**EP3624**	34.20	22.20	3	15.00	62
EN4SD363012SS	**EN4SD363012S16**	36.00	30.00	12.00	14	2	Qtr Turn	**EP3630**	34.20	28.20	3	15.00	95
EN4SD363612SS	**EN4SD363612S16**	36.00	36.00	12.00	14	2	Qtr Turn	**EP3636**	34.20	34.20	3	15.00	104
EN4SD423612SSR	-	42.00	36.00	12.00	14	5	Qtr Turn	**EP4236**	40.20	34.20	4	12.00	121
EN4SD483612SSR	-	48.00	36.00	12.00	14	5	Qtr Turn	**EP4836**	46.20	34.20	4	14.00	148
EN4SD603612SSR	-	60.00	36.00	12.00	14	5	Qtr Turn	**EP6036**	58.20	34.20	4	18.00	162
EN4SD302416SS	-	30.00	24.00	16.00	14	2	Qtr Turn	**EP3024**	28.20	22.20	3	12.00	60
EN4SD363016SS	-	36.00	30.00	16.00	14	2	Qtr Turn	**EP3630**	34.20	28.20	3	15.00	89
EN4SD483616SSR	**EN4SD483616S16R**	48.00	36.00	16.00	14	5	Qtr Turn	**EP4836**	46.20	34.20	4	14.00	135

Data subject to change without notice

© 2015. Hammond Manufacturing Ltd. All rights reserved.