HAMMOND MANUFACTURING

Quality Products. Service Excellence.

Type 4 Mild Steel Wallmount Enclosure *Eclipse Series*

Hinge Door with Quarter Turn/Handle







Panel Sold Separately

Application

- Designed to enclose electrical and/or electronic equipment and protect against harsh, industrial environments for wallmount applications.
- Impressive styling features like hidden hinges, attractive latching systems make the Eclipse a suitable addition to any high-tech equipment installation.
- A wide range of sizes and practical accessories make this product line a complete package.

Standards

- UL 508 Type 3R, 4, and 12
- CSA Type 3R, 4, and 12
- Complies with
  - NEMA Type 3R, 4, and 12
  - IEC 60529, IP66

Construction

- Formed 14 or 16 gauge steel.
- Smooth, continuously welded seams ground smooth.
- Door stiffeners are provided where required for increased strength and rigidity - designed to also permit additional mounting options.
- Formed lip on enclosure to exclude flowing liquids and contaminants.
- Door latches feature the added safety of quarter turn slot requiring use of tool for opening.
- Doors may be easily removed for modifications and are interchangeable.
- Seamless poured-in place gasket.
- Collar studs provided for mounting inner panel.
- Includes hardware kit with panel mounting nuts and sealing washers for wall mounting holes.
- Bonding stud provided on door and grounding stud installed in enclosure.
- Hinges are constructed from 304 stainless steel.
- Hinge pins are stainless steel.
- Quarter turn latch and multi-point handle (key lockable) are zinc diecast with black epoxy finish.
- Door alignment guide provided on 36" wide enclosures.

Finish

- Cover and enclosure are phosphatized and finished with a recoatable powder inside and out with choice of ANSI 61 smooth Gray (GY) or RAL7035 textured light gray (LG).

Accessories

Cooling Products
Ventilation
DIN Rail Mounting Kit
Door Stop Kit
Gland Plates
Inner Panels
Quarter Turn Inserts and Keys
Mounting Foot Kit
Swing Frame
Replacement Hinge Pins
Temperature Controls
Type 4 Hardware Kits
Blowers and Fans
DIN Rails
Drip Shield Kit
Filtered Fans
Heaters
Handles
Literature Pocket
Swing Panel
Rear Hole Plugs
Quarter Turn Assemblies
Touch-Up Spray Paint
Padlock Adaptor

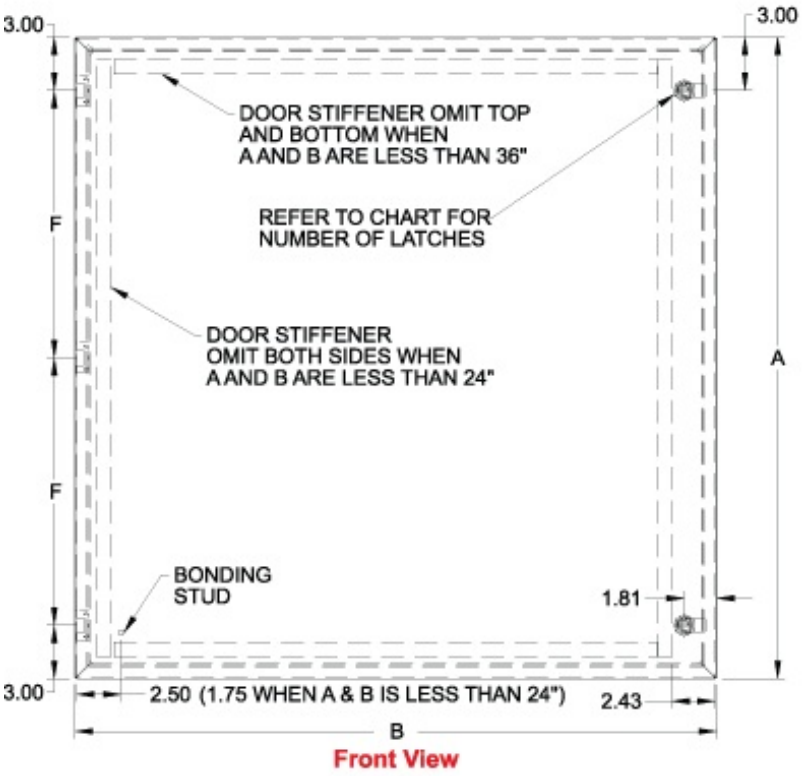

Front View

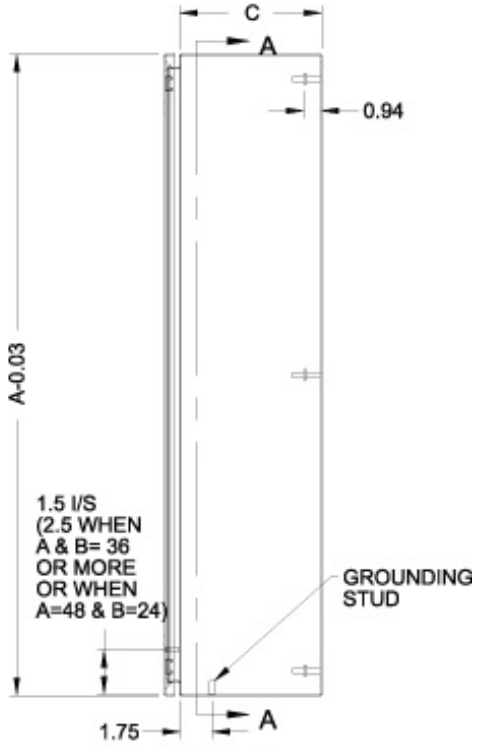

Side View

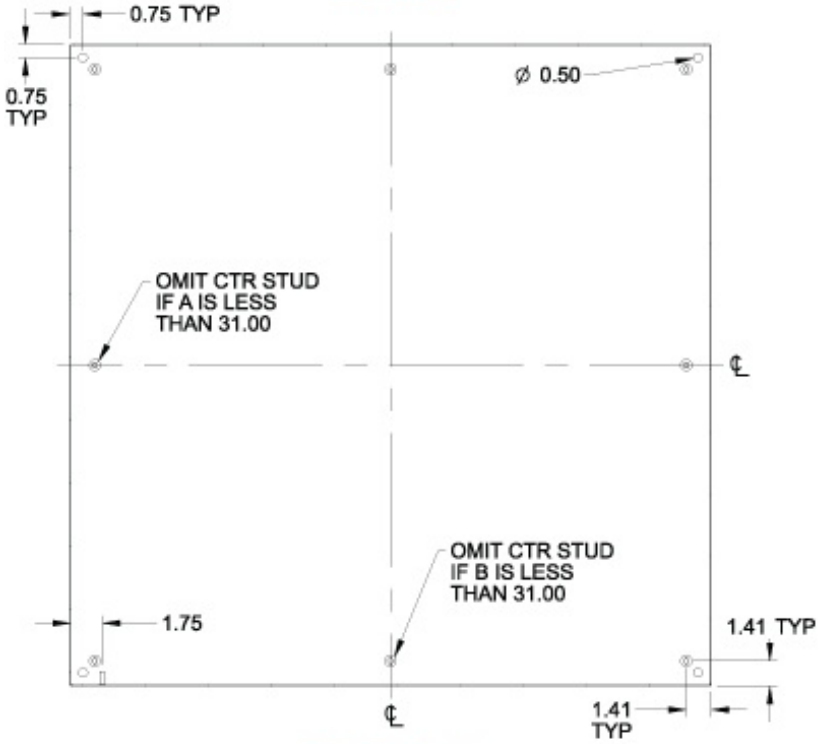

SECTION A-A

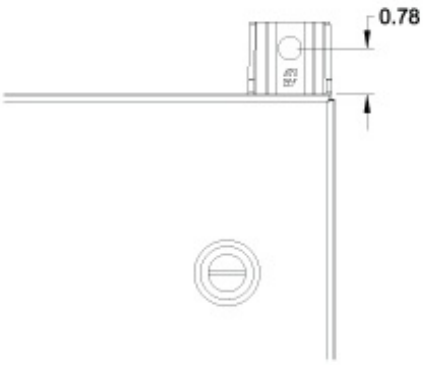

Mounting Foot Detail

Part No. (ANSI 61 Gray)	Part No. (RAL 7035 Light Gray)	Overall Dimensions A	B	C	Door/Body Gauge	Latches Qty	Type	Opt. Panel Part No.	Panel Size D	E	# Hinges	F	Ship Wt. (lbs)
EN4SD12126GY	**EN4SD12126LG**	12.00	12.00	6.00	16	1	Qtr Turn	**EP1212**	10.20	10.20	2	6.00	12
EN4SD12246GY	**EN4SD12246LG**	12.00	24.00	6.00	16	1	Qtr Turn	**EP1224**	10.20	22.20	2	18.00	24
EN4SD16126GY	**EN4SD16126LG**	16.00	12.00	6.00	16	1	Qtr Turn	**EP1612**	14.20	10.20	2	10.00	16
EN4SD16166GY	**EN4SD16166LG**	16.00	16.00	6.00	16	1	Qtr Turn	**EP1616**	14.20	14.20	2	10.00	19
EN4SD16206GY	**EN4SD16206LG**	16.00	20.00	6.00	16	1	Qtr Turn	**EP1620**	14.20	18.20	2	10.00	22
EN4SD20126GY	**EN4SD20126LG**	20.00	12.00	6.00	16	1	Qtr Turn	**EP2012**	18.20	10.20	2	14.00	20

EN4SD20166GY	**EN4SD20166LG**	20.00	16.00	6.00	16	1	Qtr Turn	**EP2016**	18.20	14.20	2	14.00	22
EN4SD20206GY	**EN4SD20206LG**	20.00	20.00	6.00	16	1	Qtr Turn	**EP2020**	18.20	18.20	2	14.00	26
EN4SD20246GY	**EN4SD20246LG**	20.00	24.00	6.00	16	1	Qtr Turn	**EP2024**	22.20	10.20	2	14.00	32
EN4SD24126GY	**EN4SD24126LG**	24.00	12.00	6.00	16	1	Qtr Turn	**EP2412**	22.20	10.20	2	18.00	24
EN4SD24166GY	**EN4SD24166LG**	24.00	16.00	6.00	16	1	Qtr Turn	**EP2416**	22.20	14.20	2	18.00	26
EN4SD24206GY	**EN4SD24206LG**	24.00	20.00	6.00	16	1	Qtr Turn	**EP2420**	22.20	18.20	2	18.00	30
EN4SD24246GY	**EN4SD24246LG**	24.00	24.00	6.00	14	2	Qtr Turn	**EP2424**	22.20	22.20	2	18.00	37
EN4SD30166GY	**EN4SD30166LG**	30.00	16.00	6.00	14	2	Qtr Turn	**EP3016**	28.20	14.20	3	12.00	35
EN4SD30206GY	**EN4SD30206LG**	30.00	20.00	6.00	14	2	Qtr Turn	**EP3020**	28.20	18.20	3	12.00	38
EN4SD30246GY	**EN4SD30246LG**	30.00	24.00	6.00	14	2	Qtr Turn	**EP3024**	28.20	22.20	3	12.00	40
EN4SD36246GY	**EN4SD36246LG**	36.00	24.00	6.00	14	2	Qtr Turn	**EP3624**	34.20	22.20	3	15.00	52
EN4SD36306GY	**EN4SD36306LG**	36.00	30.00	6.00	14	2	Qtr Turn	**EP3630**	34.20	28.20	3	15.00	60
EN4SD12248GY	**EN4SD12248LG**	12.00	24.00	8.00	16	1	Qtr Turn	**EP1224**	10.20	22.20	2	6.00	25
EN4SD16128GY	**EN4SD16128LG**	16.00	12.00	8.00	16	1	Qtr Turn	**EP1612**	14.20	10.20	2	10.00	16
EN4SD16168GY	**EN4SD16168LG**	16.00	16.00	8.00	16	1	Qtr Turn	**EP1616**	14.20	14.20	2	10.00	21
EN4SD16208GY	**EN4SD16208LG**	16.00	20.00	8.00	16	1	Qtr Turn	**EP1620**	14.20	18.20	2	10.00	25
EN4SD20128GY	**EN4SD20128LG**	20.00	12.00	8.00	16	1	Qtr Turn	**EP2012**	18.20	10.20	2	14.00	22
EN4SD20168GY	**EN4SD20168LG**	20.00	16.00	8.00	16	1	Qtr Turn	**EP2016**	18.20	14.20	2	14.00	25
EN4SD20208GY	**EN4SD20208LG**	20.00	20.00	8.00	16	1	Qtr Turn	**EP2020**	18.20	18.20	2	14.00	28
EN4SD20248GY	**EN4SD20248LG**	20.00	24.00	8.00	16	1	Qtr Turn	**EP2024**	18.20	22.20	2	14.00	32
EN4SD24128GY	**EN4SD24128LG**	24.00	12.00	8.00	16	1	Qtr Turn	**EP2412**	22.20	10.20	2	18.00	25
EN4SD24168GY	**EN4SD24168LG**	24.00	16.00	8.00	16	1	Qtr Turn	**EP2416**	22.20	14.20	2	18.00	26
EN4SD24208GY	**EN4SD24208LG**	24.00	20.00	8.00	16	1	Qtr Turn	**EP2420**	22.20	18.20	2	18.00	32
EN4SD24248GY	**EN4SD24248LG**	24.00	24.00	8.00	14	2	Qtr Turn	**EP2424**	22.20	22.20	2	18.00	40
EN4SD24308GY	**EN4SD24308LG**	24.00	30.00	8.00	14	2	Qtr Turn	**EP2430**	22.20	28.20	2	18.00	48
EN4SD30128GY	**EN4SD30128LG**	30.00	12.00	8.00	14	2	Qtr Turn	**EP3012**	28.20	10.20	3	12.00	34
EN4SD30168GY	**EN4SD30168LG**	30.00	16.00	8.00	14	2	Qtr Turn	**EP3016**	28.20	14.20	3	12.00	40
EN4SD30208GY	**EN4SD30208LG**	30.00	20.00	8.00	14	2	Qtr Turn	**EP3020**	28.20	18.20	3	12.00	42
EN4SD30248GY	**EN4SD30248LG**	30.00	24.00	8.00	14	2	Qtr Turn	**EP3024**	28.20	22.20	3	12.00	46
EN4SD30308GY	**EN4SD30308LG**	30.00	30.00	8.00	14	2	Qtr Turn	**EP3030**	28.20	28.20	3	12.00	67
EN4SD30368GY	**EN4SD30368LG**	30.00	36.00	8.00	14	2	Qtr Turn	**EP3036**	28.20	34.20	3	12.00	77
EN4SD36248GY	**EN4SD36248LG**	36.00	24.00	8.00	14	2	Qtr Turn	**EP3624**	34.20	22.20	3	15.00	55
EN4SD36308GY	**EN4SD36308LG**	36.00	30.00	8.00	14	2	Qtr Turn	**EP3630**	34.20	28.20	3	15.00	77
EN4SD36368GY	**EN4SD36368LG**	36.00	36.00	8.00	14	2	Qtr Turn	**EP3636**	34.20	34.20	3	15.00	94
EN4SD42248GY	**EN4SD42248LG**	42.00	24.00	8.00	14	1	3-point	**EP4224**	40.20	22.20	4	12.00	80
EN4SD42308GY	**EN4SD42308LG**	42.00	30.00	8.00	14	1	3-point	**EP4230**	40.20	28.20	4	12.00	95
EN4SD42368GY	**EN4SD42368LG**	42.00	36.00	8.00	14	1	3-point	**EP4236**	40.20	34.20	4	12.00	105
EN4SD48248GY	**EN4SD48248LG**	48.00	24.00	8.00	14	1	3-point	**EP4824**	46.20	22.20	4	14.00	110
EN4SD48308GY	**EN4SD48308LG**	48.00	30.00	8.00	14	1	3-point	**EP4830**	46.20	28.20	4	14.00	115
EN4SD48368GY	**EN4SD48368LG**	48.00	36.00	8.00	14	1	3-point	**EP4836**	46.20	34.20	4	14.00	120
EN4SD60368GY	**EN4SD60368LG**	60.00	36.00	8.00	14	1	3-point	**EP6036**	58.20	34.20	4	18.00	150
EN4SD161210GY	**EN4SD161210LG**	16.00	12.00	10.00	16	1	Qtr. Turn	**EP1612**	14.20	10.20	2	10.00	18
EN4SD161610GY	**EN4SD161610LG**	16.00	16.00	10.00	16	1	Qtr. Turn	**EP1616**	14.20	14.20	2	10.00	23
EN4SD162010GY	**EN4SD162010LG**	16.00	20.00	10.00	16	1	Qtr. Turn	**EP1620**	14.20	18.20	2	10.00	28
EN4SD201610GY	**EN4SD201610LG**	20.00	16.00	10.00	16	1	Qtr. Turn	**EP2016**	18.20	14.20	2	14.00	28
EN4SD202010GY	**EN4SD202010LG**	20.00	20.00	10.00	16	1	Qtr. Turn	**EP2020**	18.20	18.20	2	14.00	31
EN4SD202410GY	**EN4SD202410LG**	20.00	24.00	10.00	16	1	Qtr. Turn	**EP2024**	18.20	22.20	2	14.00	36
EN4SD241210GY	**EN4SD241210LG**	24.00	12.00	10.00	16	1	Qtr Turn	**EP2412**	22.20	10.20	2	18.00	26
EN4SD241610GY	**EN4SD241610LG**	24.00	16.00	10.00	16	1	Qtr. Turn	**EP2416**	22.20	14.20	2	18.00	30
EN4SD242010GY	**EN4SD242010LG**	24.00	20.00	10.00	16	1	Qtr. Turn	**EP2420**	22.20	18.20	2	18.00	36

EN4SD242410GY	**EN4SD242410LG**	24.00	24.00	10.00	14	2	Qtr. Turn	**EP2424**	22.20	22.20	2	18.00	45
EN4SD243010GY	**EN4SD243010LG**	24.00	30.00	10.00	14	2	Qtr. Turn	**EP2430**	22.20	28.20	2	18.00	53
EN4SD302010GY	**EN4SD302010LG**	30.00	20.00	10.00	14	2	Qtr. Turn	**EP3020**	28.20	18.20	3	12.00	47
EN4SD302410GY	**EN4SD302410LG**	30.00	24.00	10.00	14	2	Qtr. Turn	**EP3024**	28.20	22.20	3	12.00	53
EN4SD303010GY	**EN4SD303010LG**	30.00	30.00	10.00	14	2	Qtr. Turn	**EP3030**	28.20	28.20	3	12.00	75
EN4SD362410GY	**EN4SD362410LG**	36.00	24.00	10.00	14	2	Qtr. Turn	**EP3624**	34.20	22.20	3	15.00	70
EN4SD363010GY	**EN4SD363010LG**	36.00	30.00	10.00	14	2	Qtr. Turn	**EP3630**	34.20	28.20	3	15.00	84
EN4SD363610GY	**EN4SD363610LG**	36.00	36.00	10.00	14	2	Qtr. Turn	**EP3636**	34.20	34.20	3	15.00	100
EN4SD423010GY	**EN4SD423010LG**	42.00	30.00	10.00	14	1	3-point	**EP4230**	40.20	28.20	4	12.00	107
EN4SD423610GY	**EN4SD423610LG**	42.00	36.00	10.00	14	1	3-point	**EP4236**	40.20	34.20	4	12.00	117
EN4SD482410GY	**EN4SD482410LG**	48.00	24.00	10.00	14	1	3-point	**EP4824**	46.20	22.20	4	14.00	95
EN4SD483010GY	**EN4SD483010LG**	48.00	30.00	10.00	14	1	3-point	**EP4830**	46.20	28.20	4	14.00	120
EN4SD483610GY	**EN4SD483610LG**	48.00	36.00	10.00	14	1	3-point	**EP4836**	46.20	34.20	4	14.00	125
EN4SD603610GY	**EN4SD603610LG**	60.00	36.00	10.00	14	1	3-point	**EP6036**	58.20	34.20	4	18.00	150
EN4SD201612GY	**EN4SD201612LG**	20.00	16.00	12.00	16	1	Qtr Turn	**EP2016**	18.20	14.20	2	14.00	32
EN4SD202012GY	**EN4SD202012LG**	20.00	20.00	12.00	16	1	Qtr Turn	**EP2020**	18.20	18.20	2	14.00	34
EN4SD242012GY	**EN4SD242012LG**	24.00	20.00	12.00	16	1	Qtr Turn	**EP2420**	22.20	18.20	2	18.00	38
EN4SD242412GY	**EN4SD242412LG**	24.00	24.00	12.00	14	2	Qtr Turn	**EP2424**	22.20	22.20	2	18.00	47
EN4SD302412GY	**EN4SD302412LG**	30.00	24.00	12.00	14	2	Qtr Turn	**EP3024**	28.20	22.20	3	12.00	57
EN4SD303012GY	**EN4SD303012LG**	30.00	30.00	12.00	14	2	Qtr Turn	**EP3030**	28.20	28.20	3	12.00	80
EN4SD362412GY	**EN4SD362412LG**	36.00	24.00	12.00	14	2	Qtr Turn	**EP3624**	34.20	22.20	3	15.00	62
EN4SD363012GY	**EN4SD363012LG**	36.00	30.00	12.00	14	2	Qtr Turn	**EP3630**	34.20	28.20	3	15.00	91
EN4SD363612GY	**EN4SD363612LG**	36.00	36.00	12.00	14	2	Qtr Turn	**EP3636**	34.20	34.20	3	15.00	104
EN4SD423012GY	**EN4SD423012LG**	42.00	30.00	12.00	14	1	3-point	**EP4230**	40.20	28.20	4	12.00	111
EN4SD423612GY	**EN4SD423612LG**	42.00	36.00	12.00	14	1	3-point	**EP4236**	40.20	34.20	4	12.00	121
EN4SD482412GY	**EN4SD482412LG**	48.00	24.00	12.00	14	1	3-point	**EP4824**	46.20	22.20	4	14.00	98
EN4SD483612GY	**EN4SD483612LG**	48.00	36.00	12.00	14	1	3-point	**EP4836**	46.20	34.20	4	14.00	148
EN4SD603612GY	**EN4SD603612LG**	60.00	36.00	12.00	14	1	3-point	**EP6036**	58.20	34.20	4	18.00	165
EN4SD723012GY	**EN4SD723012LG**	72.00	30.00	12.00	14	2	Qtr Turn, 5-point	**EP7230**	70.20	28.20	5	16.50	190
EN4SD723612GY	**EN4SD723612LG**	72.00	36.00	12.00	14	2	Qtr Turn, 5-point	**EP7236**	70.20	34.20	5	16.50	195
EN4SD242016GY	**EN4SD242016LG**	24.00	20.00	16.00	16	1	Qtr Turn	**EP2420**	22.20	18.20	2	18.00	52
EN4SD242416GY	**EN4SD242416LG**	24.00	24.00	16.00	14	2	Qtr Turn	**EP2424**	22.20	22.20	2	18.00	66
EN4SD302416GY	**EN4SD302416LG**	30.00	24.00	16.00	14	2	Qtr Turn	**EP3024**	28.20	22.20	3	12.00	85
EN4SD363016GY	**EN4SD363016LG**	36.00	30.00	16.00	14	2	Qtr Turn	**EP3630**	34.20	28.20	3	15.00	102
EN4SD423616GY	**EN4SD423616LG**	42.00	36.00	16.00	14	1	3-point	**EP4236**	40.20	34.20	4	12.00	140
EN4SD483616GY	**EN4SD483616LG**	48.00	36.00	16.00	14	1	3-point	**EP4836**	46.20	34.20	4	14.00	148
EN4SD603616GY	**EN4SD603616LG**	60.00	36.00	16.00	14	1	3-point	**EP6036**	58.20	34.20	4	18.00	200
EN4SD723016GY	**EN4SD723016LG**	72.00	30.00	16.00	14	2	Qtr Turn, 5-point	**EP7230**	70.20	28.20	5	16.50	215
EN4SD723616GY	**EN4SD723616LG**	72.00	36.00	16.00	14	2	Qtr Turn, 5-point	**EP7236**	70.20	34.20	5	16.50	217
EN4SD242420GY	**EN4SD242420LG**	24.00	24.00	20.00	14	2	Qtr Turn	**EP2424**	22.20	22.20	2	18.00	70
EN4SD302420GY	**EN4SD302420LG**	30.00	24.00	20.00	14	2	Qtr Turn	**EP3024**	28.20	22.20	3	12.00	82
EN4SD363020GY	**EN4SD363020LG**	36.00	30.00	20.00	14	2	Qtr Turn	**EP3630**	34.20	28.20	3	15.00	117

EN4SD483620GY	**EN4SD483620LG**	48.00	36.00	20.00	14	1	3-point	**EP4836**	46.20	34.20	4	14.00	165
EN4SD603620GY	**EN4SD603620LG**	60.00	36.00	20.00	14	1	3-point	**EP6036**	58.20	34.20	4	18.00	210
EN4SD723020GY	**EN4SD723020LG**	72.00	30.00	20.00	14	2	Qtr Turn, 5-point	**EP7230**	70.20	28.20	5	16.50	217
EN4SD302424GY	**EN4SD302424LG**	30.00	24.00	24.00	14	2	Qtr Turn	**EP3024**	28.20	22.20	3	12.00	115
EN4SD723024GY	**EN4SD723024LG**	72.00	30.00	24.00	14	2	Qtr Turn, 5-point	**EP7230**	70.20	28.20	5	16.50	220

Data subject to change without notice.

© 2014. Hammond Manufacturing Ltd. All rights reserved.