CMA Module Racks

These 19” Rackmount Subracks provide attractive, sturdy, and mechanically excellent housings to enclose electronic assemblies.

These units provide the benefits and features of custom enclosures without the expense.

EFP modules feature aluminum extruded sides to accept .062” thick P.C. cards. Extended front panels on modules allow thumb screw locking of module to subrack for easy insertion and extraction. The extended front panel also provides an attractive appearance.

Side panels fasten to sturdy Vector TSW model (1.75” wide) Struts with two screws . Subrack models accept widths of 1.6”, 2.0” and 3.0” EFP modules; 4.5” module optional. Rear Struts are adjustable in width and height.





- 1.6”, 2.0” and 3.0” evenly spaced modules are accepted
- Side Panels have double screw attachment to wide TSW (1.75”) metal strut
- Rear Struts are adjustable in width and height with BR16-1 bracket
- Special aluminum extruded case guides and spacers provide secure mounting for modules.
- Standard 19” width. Other widths available by special order
- Filler panels available where mixing widths creates gaps
- Aluminum construction, brushed, with clear irridite finish
- Paint options available

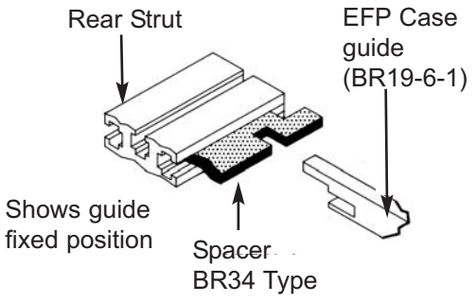

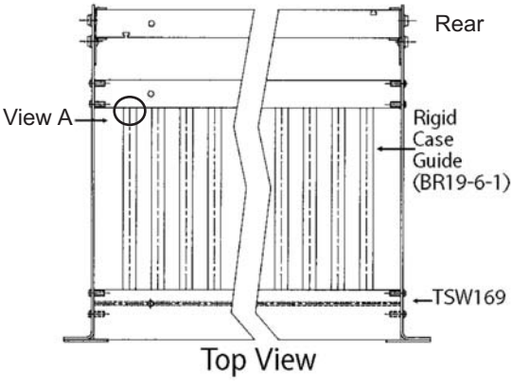



Subrack Part Number	# Of Modules	Width	Height	Depth
CMA13-16/90	10	19”	3U	9.00”
CMA13-20/90	8	19”	3U	9.00”
CMA13-30/90	5	19”	3U	9.00”
CMA14-16/90	10	19”	3U	12.00”
CMA14-20/90	8	19”	3U	12.00”
CMA14-30/90	5	19”	3U	12.00”
CMA15-20/90	8	19”	4U	12.00”

EIA-Based Vector-Pak™ Subrack Systems

CMA Modules (EFPs)

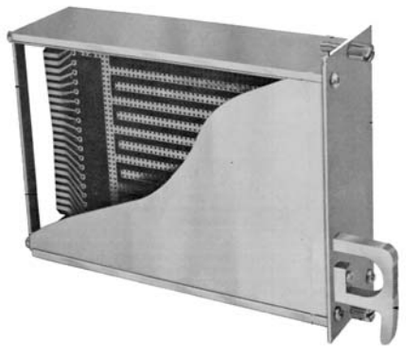

EFP204A66F - 2" EFP Modules with HA11 handle

- Extended Front Panels provide thumb screw mounting and flush fit from module to module and with strut line.
- Modules provide shielding
- Front Panels may be customized with cutouts and/or color (Contact factory).
- All covers have locking detent; slides out of groove when released.
- Supplied in Kit form
- Modules with 6.5" depth accept 4.5" X 6.5" cards.
- Modules with 9.7" depth accept 4.5" X 9.6" cards.

Side Rail Extrusions: Grooves for card insertion

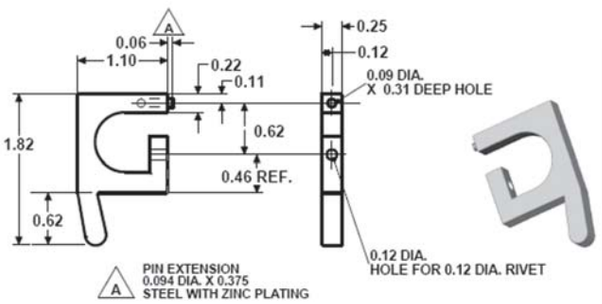

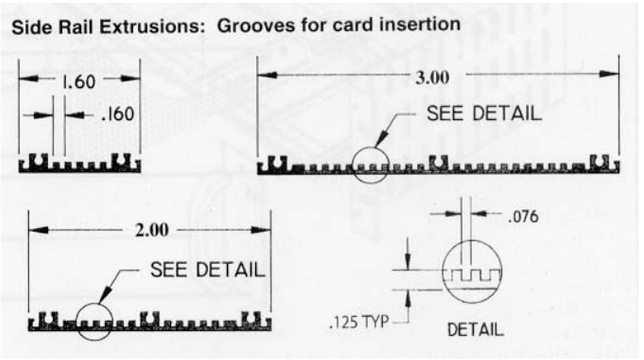

HA11 handle Pkg of 2,
order part number HA11/2

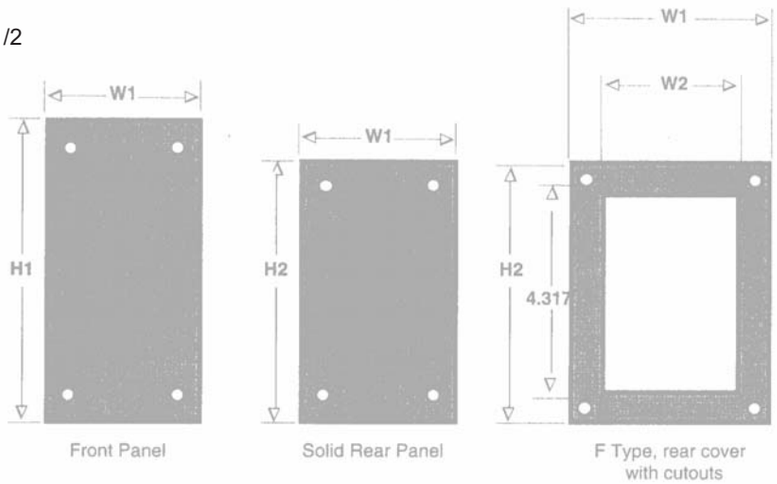

- Front panel is removable and may be customized
- HA11 finger-pull handle available separately (order part #HA11/2
- Rear panels: single piece with cutouts (F type)
- Replacement side panels PL4566 (4.5" X 6.6") and PL4597 (4.5" X 9.7")

Kit Type Closed Rear Panel	Kit Type Open Rear Panel	L	W1	W2	H1	H2	Solid Front Panel #	Solid Rear Cover	Open Rear Panel
EFP164A66	EFP164A66F	6.5"	1.65"	1.31"	5.22"	4.62"	FP16-52	BP13-4	BP13-40F
EFP164A97	EFP164A97F	9.6"	1.65"	1.31"	5.22"	4.62"	FP16-52	BP13-4	BP13-40F
EFP204A66	EFP204A66F	6.5"	2.05"	1.71"	5.22"	4.62"	FP2A52	BP17-4	BP17-40F
EFP204A97	EFP204A97F	9.6"	2.05"	1.71"	5.22"	4.62"	FP2A52	BP17-4	BP17-40F
EFP304A66	EFP304A66F	6.5"	3.05"	2.71"	5.22"	4.62"	FP3A52	BP27-4	BP27-40F
EFP304A97	EFP304A97F	9.6"	3.05"	2.71"	5.22"	4.62"	FP3A52	BP27-4	BP27-40F
EFP454A66	EFP454A66F	6.5"	4.55"	4.21"	5.22"	4.62"	FP3A52	BP42-4	BP27-40F
EFP454A97	N/A	9.6"	4.55"	4.21"	5.22"	4.62"	FP45A52	BP42-4	BP42-40F
*EFP206A97	N/A	9.6"	2.05"	1.71"	6.97"	6.37"	FP2A70	BP17-6	N/A

* 4U for CMA15-20/90