Industrial HRC Fuse Link

31 x 112mm, BS88, IEC 269-1
Offset Bolted Tags

DEO

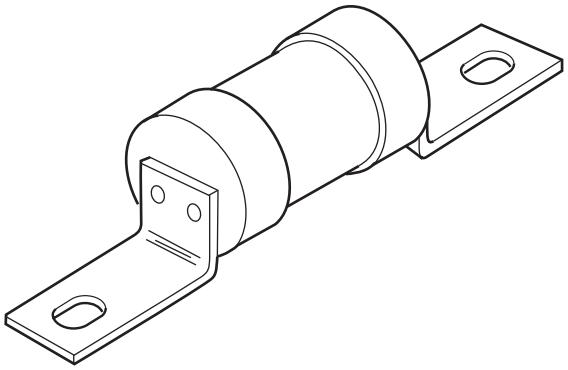

CATALOG SYMBOL: DEO
INDUSTRIAL HRC FUSE
OFFSET BOLTED TAGS
PACKAGE QUANTITY: 5
80kA INTERRUPTING RATING
MOUNTS ON BH-0111 MODULAR FUSEBLOCK

Dimensional Data:

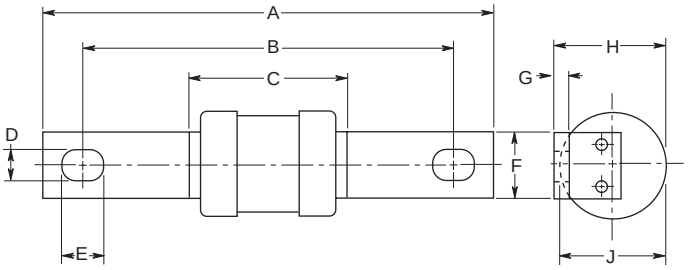

Time-Current Characteristic Curve (Full Size Curves Available)

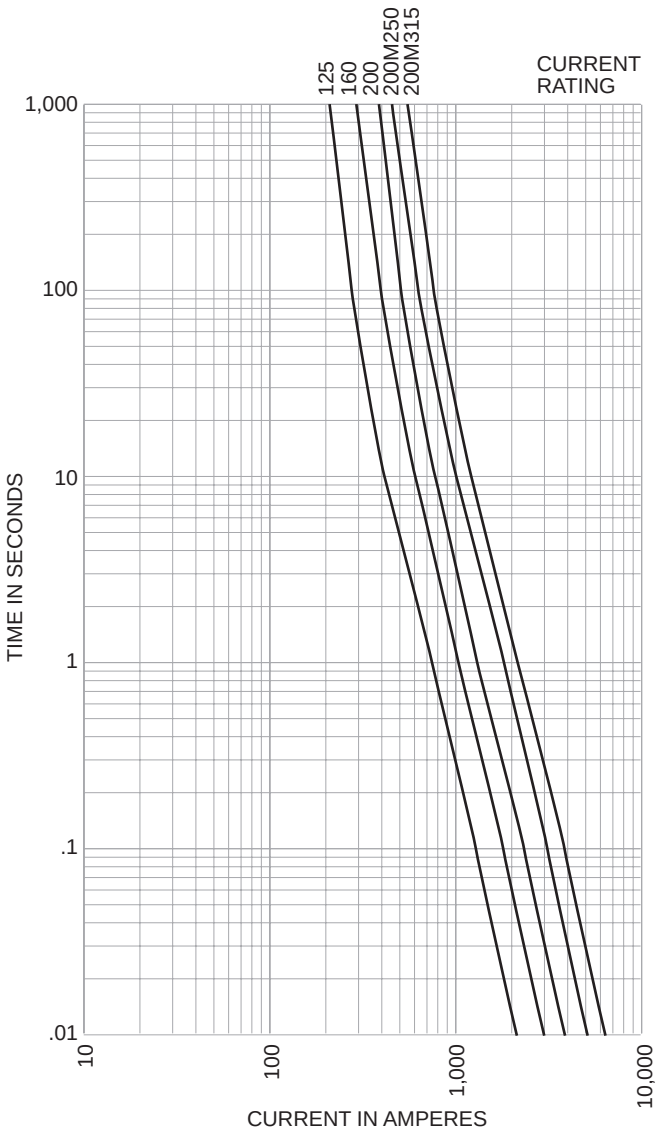

Electrical Characteristics

Catalog Number	Ampere Rating	I²T (Amp² Seconds) Pre-Arcing	Total At 240V	Total At 415V	Nom Watts Loss	Rated Voltage	Dimensions (Inches/mm) A	B	C	D	E	F	G	H	J
DEO125	125	29,500	50,000	71,000	11	415AC	110.0	93.7	47.0	9.0	10.0	19.0	0.13 3.2	31.0	29.5
DEO160	160	57,000	97,000	135,000	13										
DEO200	200	120,000	205,000	290,000	14										
DEO200M250	200M250	200,000	340,000	480,000	18										
DEO200M315	200M315	265,000	45,000	635,000	22										

The only controlled copy of this BIF document is the electronic read-only version located on the Bussmann Network Drive. All other copies of this BIF document are by definition uncontrolled.This bulletin is intended to clearly present comprehensive product data and provide technical information that will help the end user with design applications. Bussmann reserves the right, without notice, to change design or construction of any products and to discontinue or limit distribution of any products. Bussmann also reserves the right to change or update, without notice, any technical information contained in this bulletin. Once a product has been selected, it should be tested by the user in all possible applications.