CONCEPT™, TYPE 4X



INDUSTRY STANDARDS

Mounting brackets required to meet UL/CSA external mounting requirements.

UL 508A Listed; Type 3R, 4, 4X, 12; File No. E61997
cUL Listed per CSA C22.2 No 94; Type 3R, 4, 4X, 12; File No. E61997

NEMA/EEMAC Type 3R, 4, 4X, 12, 13
CSA File No. 42186: Type 4, 4X, 12
VDE IP66
IEC 60529, IP66
Meets NEMA Type 3RX requirements

APPLICATION

For indoor or outdoor applications that require corrosion protection from chemicals and water. CONCEPT™ Enclosures feature streamlined styling with an attractive stroked finish and flush quarter-turn latches for secure closure. Available in solid- and window-door models.

SPECIFICATIONS

- Manufactured from Type 304 or Type 316L stainless steel
- Minimum-width body flange provides maximum body opening
- External formed 90-degree body flange
- Panel mounting studs fit optional CONCEPT panels and other accessories
- Mounting holes in back of body for direct mounting or for optional external mounting brackets
- Type 316 stainless steel hidden hinges promote clean aesthetic appearance
- Corner formed doors are interchangeable and easily removed by pulling clip-style hinge pins
- Provision on door (except window-door style and when B = 12 in.) for thermoplastic data pocket
- Provision on door (except window-door style and when B = 12 in.) for optional doorstop kit
- Quarter-turn latches furnished with flush slotted insert
- Seamless foam-in-place gasket
- Self-grounding latch system with double seal
- Bonding provision on door; grounding stud on body
- Furnished hardware kit consists of panel-mounting nuts, panel-grounding hardware and sealing washers for wall-mounting holes
- Installation instructions
- Window doors have a clear polycarbonate window

FINISH

Door and body have smooth #4 brushed finish.

ACCESSORIES

See also Accessories.
Type 316 Stainless Steel Door Stop Kit
CONCEPT™ Panels
H2OMIT™ Vent Drains, Type 4X
H2OMIT™ Thermoelectric Dehumidifier
Handles
Lock Inserts

MODIFICATION AND CUSTOMIZATION

Hoffman excels at modifying and customizing products to your specifications. Contact your local Hoffman sales office or distributor for complete information.

BULLETIN: CWS

Standard Product **One-Door**

Catalog Number	AxBxC in.	AxBxC mm	Door Gauge	Body Gauge	Panel	Conductive Panel	Panel Size D x E (in.)	Panel Size D x E (mm)	Mounting G x H (in.)	Mounting G x H (mm)	Latches Qty.	Style	J (in.)	J (mm)
CSD12126SS	12.00 x 12.00 x 6.00	305 x 305 x 152	16	16	CP1212	CP1212G	10.20 x 10.20	259 x 259	10.50 x 10.50	267 x 267	1	Quarter-turn	6.00	152
CSD12126SS6	12.00 x 12.00 x 6.00	305 x 305 x 152	16	16	CP1212	CP1212G	10.20 x 10.20	259 x 259	10.50 x 10.50	267 x 267	1	Quarter-turn	6.00	152
CSD16126SS	16.00 x 12.00 x 6.00	406 x 305 x 152	16	16	CP1612	CP1612G	14.20 x 10.20	361 x 259	14.50 x 10.50	368 x 267	1	Quarter-turn	8.00	203
CSD16126SS6	16.00 x 12.00 x 6.00	406 x 305 x 152	16	16	CP1612	CP1612G	14.20 x 10.20	361 x 259	14.50 x 10.50	368 x 267	1	Quarter-turn	8.00	203
CSD16166SS	16.00 x 16.00 x 6.00	406 x 406 x 152	16	16	CP1616	CP1616G	14.20 x 14.20	361 x 361	14.50 x 14.50	368 x 368	1	Quarter-turn	8.00	203
CSD16166SS6	16.00 x 16.00 x 6.00	406 x 406 x 152	16	16	CP1616	CP1616G	14.20 x 14.20	361 x 361	14.50 x 14.50	368 x 368	1	Quarter-turn	8.00	203
CSD20166SS	20.00 x 16.00 x 6.00	508 x 406 x 152	16	16	CP2016	CP2016G	18.20 x 14.20	462 x 361	18.50 x 14.50	470 x 368	1	Quarter-turn	10.00	254
CSD20166SS6	20.00 x 16.00 x 6.00	508 x 406 x 152	16	16	CP2016	CP2016G	18.20 x 14.20	462 x 361	18.50 x 14.50	470 x 368	1	Quarter-turn	10.00	254
CSD20206SS	20.00 x 20.00 x 6.00	508 x 508 x 152	16	16	CP2020	CP2020G	18.20 x 18.20	462 x 462	18.50 x 18.50	470 x 470	1	Quarter-turn	10.00	254
CSD20206SS6	20.00 x 20.00 x 6.00	508 x 508 x 152	16	16	CP2020	CP2020G	18.20 x 18.20	462 x 462	18.50 x 18.50	470 x 470	1	Quarter-turn	10.00	254
CSD16128SS	16.00 x 12.00 x 8.00	406 x 305 x 203	16	16	CP1612	CP1612G	14.20 x 10.20	361 x 259	14.50 x 10.50	368 x 267	1	Quarter-turn	8.00	203
CSD16128SS6	16.00 x 12.00 x 8.00	406 x 305 x 203	16	16	CP1612	CP1612G	14.20 x 10.20	361 x 259	14.50 x 10.50	368 x 267	1	Quarter-turn	8.00	203
CSD16168SS	16.00 x 16.00 x 8.00	406 x 406 x 203	16	16	CP1616	CP1616G	14.20 x 14.20	361 x 361	14.50 x 14.50	368 x 368	1	Quarter-turn	8.00	203
CSD16168SS6	16.00 x 16.00 x 8.00	406 x 406 x 203	16	16	CP1616	CP1616G	14.20 x 14.20	361 x 361	14.50 x 14.50	368 x 368	1	Quarter-turn	8.00	203
CSD16208SS	16.00 x 20.00 x 8.00	406 x 508 x 203	16	16	CP2016	CP2016G	18.20 x 14.20	462 x 361	14.50 x 18.50	368 x 470	1	Quarter-turn	8.00	203
CSD16208SS6	16.00 x 20.00 x 8.00	406 x 508 x 203	16	16	CP2016	CP2016G	18.20 x 14.20	462 x 361	14.50 x 18.50	368 x 470	1	Quarter-turn	8.00	203
CSD20168SS	20.00 x 16.00 x 8.00	508 x 406 x 203	16	16	CP2016	CP2016G	18.20 x 14.20	462 x 361	18.50 x 14.50	470 x 368	1	Quarter-turn	10.00	254
CSD20168SS6	20.00 x 16.00 x 8.00	508 x 406 x 203	16	16	CP2016	CP2016G	18.20 x 14.20	462 x 361	18.50 x 14.50	470 x 368	1	Quarter-turn	10.00	254
CSD20208SS	20.00 x 20.00 x 8.00	508 x 508 x 203	16	16	CP2020	CP2020G	18.20 x 18.20	462 x 462	18.50 x 18.50	470 x 470	1	Quarter-turn	10.00	254
CSD20208SS6	20.00 x 20.00 x 8.00	508 x 508 x 203	16	16	CP2020	CP2020G	18.20 x 18.20	462 x 462	18.50 x 18.50	470 x 470	1	Quarter-turn	10.00	254
CSD24168SS	24.00 x 16.00 x 8.00	610 x 406 x 203	16	16	CP2416	CP2416G	22.20 x 14.20	564 x 361	22.50 x 14.50	572 x 368	1	Quarter-turn	12.00	305
CSD24168SS6	24.00 x 16.00 x 8.00	610 x 406 x 203	16	16	CP2416	CP2416G	22.20 x 14.20	564 x 361	22.50 x 14.50	572 x 368	1	Quarter-turn	12.00	305
CSD24208SS	24.00 x 20.00 x 8.00	610 x 508 x 203	16	16	CP2420	CP2420G	22.20 x 18.20	564 x 462	22.50 x 18.50	572 x 470	1	Quarter-turn	12.00	305
CSD24208SS6	24.00 x 20.00 x 8.00	610 x 508 x 203	16	16	CP2420	CP2420G	22.20 x 18.20	564 x 462	22.50 x 18.50	572 x 470	1	Quarter-turn	12.00	305
CSD24248SS	24.00 x 24.00 x 8.00	610 x 610 x 203	14	16	CP2424	CP2424	22.20 x 22.20	564 x 564	22.50 x 22.50	572 x 572	2	Quarter-turn	5.00	127
CSD24248SS6	24.00 x 24.00 x 8.00	610 x 610 x 203	14	16	CP2424	CP2424G	22.20 x 22.20	564 x 564	22.50 x 22.50	572 x 572	2	Quarter-turn	5.00	127

Catalog Number	AxBxC in.	AxBxC mm	Door Gauge	Body Gauge	Panel	Conductive Panel	Panel Size D x E (in.)	Panel Size D x E (mm)	Mounting G x H (in.)	Mounting G x H (mm)	Latches Qty.	Style	J (in.)	J (mm)
CSD24308SS	24.00 x 30.00 x 8.00	610 x 762 x 203	14	16	CP3024	CP30240G	28.20 x 22.20	716 x 564	28.50 x 22.50	724 x 572	2	Quarter-turn	5.00	127
CSD24308SS6	24.00 x 30.00 x 8.00	610 x 762 x 203	14	16	CP3024	CP3024G	28.20 x 22.20	716 x 564	28.50 x 22.50	724 x 572	2	Quarter-turn	5.00	127
CSD30248SS	30.00 x 24.00 x 8.00	762 x 610 x 203	14	16	CP3024	CP3024G	28.20 x 22.20	716 x 564	28.50 x 22.50	724 x 572	2	Quarter-turn	5.00	127
CSD30248SS6	30.00 x 24.00 x 8.00	762 x 610 x 203	14	16	CP3024	CP3024G	28.20 x 22.20	716 x 564	28.50 x 22.50	724 x 572	2	Quarter-turn	5.00	127
CSD30308SS	30.00 x 30.00 x 8.00	762 x 762 x 203	14	16	CP3030	CP3030G	28.20 x 28.20	716 x 716	28.50 x 28.50	724 x 724	2	Quarter-turn	5.00	127
CSD30308SS6	30.00 x 30.00 x 8.00	762 x 762 x 203	14	16	CP3030	CP3030G	28.20 x 28.20	716 x 716	28.50 x 28.50	724 x 724	2	Quarter-turn	5.00	127
CSD36248SS	36.00 x 24.00 x 8.00	914 x 610 x 203	14	16	CP3624	CP3624G	34.20 x 22.20	869 x 564	34.50 x 22.50	876 x 572	2	Quarter-turn	5.00	127
CSD36248SS6	36.00 x 24.00 x 8.00	914 x 610 x 203	14	16	CP3624	CP3624G	34.20 x 22.20	869 x 564	34.50 x 22.50	876 x 572	2	Quarter-turn	5.00	127
CSD36308SS	36.00 x 30.00 x 8.00	914 x 762 x 203	14	16	CP3630	CP3630G	34.20 x 28.20	869 x 716	34.50 x 28.50	876 x 724	2	Quarter-turn	5.00	127
CSD36308SS6	36.00 x 30.00 x 8.00	914 x 762 x 203	14	16	CP3630	CP3630G	34.20 x 28.20	869 x 716	34.50 x 28.50	876 x 724	2	Quarter-turn	5.00	127
CSD161210SS	16.00 x 12.00 x 10.00	406 x 305 x 254	16	16	CP1612	CP1612G	14.20 x 10.20	361 x 259	14.50 x 10.50	368 x 267	1	Quarter-turn	8.00	203
CSD161210SS6	16.00 x 12.00 x 10.00	406 x 305 x 254	16	16	CP1612	CP1612G	14.20 x 10.20	361 x 259	14.50 x 10.50	368 x 267	1	Quarter-turn	8.00	203
CSD161610SS	16.00 x 16.00 x 10.00	406 x 406 x 254	16	16	CP1616	CP1616G	14.20 x 14.20	361 x 361	14.50 x 14.50	368 x 368	1	Quarter-turn	8.00	203
CSD161610SS6	16.00 x 16.00 x 10.00	406 x 406 x 254	16	16	CP1616	CP1616G	14.20 x 14.20	361 x 361	14.50 x 14.50	368 x 368	1	Quarter-turn	8.00	203
CSD162010SS	16.00 x 20.00 x 10.00	406 x 508 x 254	16	16	CP2016	CP2016G	18.20 x 14.20	462 x 361	14.50 x 18.50	368 x 470	1	Quarter-turn	8.00	203
CSD162010SS6	16.00 x 20.00 x 10.00	406 x 508 x 254	16	16	CP2016	CP2016G	18.20 x 14.20	462 x 361	14.50 x 18.50	368 x 470	1	Quarter-turn	8.00	203
CSD201610SS	20.00 x 16.00 x 10.00	508 x 406 x 254	16	16	CP2016	CP2016G	18.20 x 14.20	462 x 361	18.50 x 14.50	470 x 368	1	Quarter-turn	10.00	254
CSD201610SS6	20.00 x 16.00 x 10.00	508 x 406 x 254	16	16	CP2016	CP2016G	18.20 x 14.20	462 x 361	18.50 x 14.50	470 x 368	1	Quarter-turn	10.00	254
CSD202010SS	20.00 x 20.00 x 10.00	508 x 508 x 254	16	16	CP2020	CP2020G	18.20 x 18.20	462 x 462	18.50 x 18.50	470 x 470	1	Quarter-turn	10.00	254
CSD202010SS6	20.00 x 20.00 x 10.00	508 x 508 x 254	16	16	CP2020	CP2020G	18.20 x 18.20	462 x 462	18.50 x 18.50	470 x 470	1	Quarter-turn	10.00	254
CSD202410SS	20.00 x 24.00 x 10.00	508 x 610 x 254	16	16	CP2420	CP2420G	22.20 x 18.20	464 x 462	18.50 x 22.50	470 x 572	1	Quarter-turn	10.00	254
CSD202410SS6	20.00 x 24.00 x 10.00	508 x 610 x 254	16	16	CP2420	CP2420G	22.20 x 18.20	464 x 462	18.50 x 22.50	470 x 572	1	Quarter-turn	10.00	254
CSD241610SS	24.00 x 16.00 x 10.00	610 x 406 x 254	16	16	CP2416	CP2416G	22.20 x 14.20	564 x 361	22.50 x 14.50	572 x 368	1	Quarter-turn	12.00	305
CSD241610SS6	24.00 x 16.00 x 10.00	610 x 406 x 254	16	16	CP2416	CP2416G	22.20 x 14.20	564 x 361	22.50 x 14.50	572 x 368	1	Quarter-turn	12.00	305
CSD242010SS	24.00 x 20.00 x 10.00	610 x 508 x 254	16	16	CP2420	CP2420G	22.20 x 18.20	564 x 462	22.50 x 18.50	572 x 470	1	Quarter-turn	12.00	305
CSD242010SS6	24.00 x 20.00 x 10.00	610 x 508 x 254	16	16	CP2420	CP2420G	22.20 x 18.20	564 x 462	22.50 x 18.50	572 x 470	1	Quarter-turn	12.00	305
CSD242410SS	24.00 x 24.00 x 10.00	610 x 610 x 254	14	16	CP2424	CP2424G	22.20 x 22.20	564 x 564	22.50 x 22.50	572 x 572	2	Quarter-turn	5.00	127
CSD242410SS6	24.00 x 24.00 x 10.00	610 x 610 x 254	14	16	CP2424	CP2424	22.20 x 22.20	564 x 564	22.50 x 22.50	572 x 572	2	Quarter-turn	5.00	127
CSD243010SS	24.00 x 30.00 x 10.00	610 x 762 x 254	14	16	CP3024	CP3024G	28.20 x 22.20	716 x 564	22.50 x 28.50	572 x 724	2	Quarter-turn	5.00	127
CSD243010SS6	24.00 x 30.00 x 10.00	610 x 762 x 254	14	16	CP3024	CP3024G	28.20 x 22.20	716 x 564	22.50 x 28.50	572 x 724	2	Quarter-turn	5.00	127
CSD302010SS	30.00 x 20.00 x 10.00	762 x 508 x 254	14	16	CP3020	CP3020G	28.20 x 18.20	716 x 462	28.50 x 18.50	724 x 470	2	Quarter-turn	5.00	127
CSD302010SS6	30.00 x 20.00 x 10.00	762 x 508 x 254	14	16	CP3020	CP3020G	28.20 x 18.20	716 x 462	28.50 x 18.50	724 x 470	2	Quarter-turn	5.00	127
CSD302410SS	30.00 x 24.00 x 10.00	762 x 610 x 254	14	16	CP3024	CP3024G	28.20 x 22.20	716 x 564	28.50 x 22.50	724 x 572	2	Quarter-turn	5.00	127
CSD302410SS6	30.00 x 24.00 x 10.00	762 x 610 x 254	14	16	CP3024	CP3024G	28.20 x 22.20	716 x 564	28.50 x 22.50	724 x 572	2	Quarter-turn	5.00	127
CSD303010SS	30.00 x 30.00 x 10.00	762 x 762 x 254	14	16	CP3030	CP3030G	28.20 x 28.20	716 x 716	28.50 x 28.50	724 x 724	2	Quarter-turn	5.00	127
CSD303010SS6	30.00 x 30.00 x 10.00	762 x 762 x 254	14	16	CP3030	CP3030G	28.20 x 28.20	716 x 716	28.50 x 28.50	724 x 724	2	Quarter-turn	5.00	127
CSD362410SS	36.00 x 24.00 x 10.00	914 x 610 x 254	14	16	CP3624	CP3624G	34.20 x 22.20	869 x 564	34.50 x 22.50	876 x 572	2	Quarter-turn	5.00	127
CSD362410SS6	36.00 x 24.00 x 10.00	914 x 610 x 254	14	16	CP3624	CP3624G	34.20 x 22.20	869 x 564	34.50 x 22.50	876 x 572	2	Quarter-turn	5.00	127
CSD363010SS	36.00 x 30.00 x 10.00	914 x 762 x 254	14	16	CP3630	CP3630G	34.20 x 28.20	869 x 716	34.50 x 28.50	876 x 724	2	Quarter-turn	5.00	127
CSD363010SS6	36.00 x 30.00 x 10.00	914 x 762 x 254	14	16	CP3630	CP3630G	34.20 x 28.20	869 x 716	34.50 x 28.50	876 x 724	2	Quarter-turn	5.00	127
CSD482410SS	48.00 x 24.00 x 10.00	1220 x 610 x 254	14	14	CP4824	CP4824G	46.20 x 22.20	1173 x 564	46.50 x 22.50	1181 x 572	1	3-point	24.00	610
CSD482410SS6	48.00 x 24.00 x 10.00	1220 x 610 x 254	14	14	CP4824	CP4824G	46.20 x 22.20	1173 x 564	46.50 x 22.50	1181 x 572	1	3-point	24.00	610
CSD202012SS	20.00 x 20.00 x 12.00	508 x 508 x 305	14	16	CP2020	CP2020G	18.20 x 18.20	462 x 462	18.50 x 18.50	470 x 470	1	Quarter-turn	10.00	254
CSD202012SS6	20.00 x 20.00 x 12.00	508 x 508 x 305	14	16	CP2020	CP2020G	18.20 x 18.20	462 x 462	18.50 x 18.50	470 x 470	1	Quarter-turn	10.00	254
CSD242412SS	24.00 x 24.00 x 12.00	610 x 610 x 305	14	16	CP2424	CP2424G	22.20 x 22.20	564 x 564	22.50 x 22.50	572 x 572	2	Quarter-turn	5.00	127
CSD242412SS6	24.00 x 24.00 x 12.00	610 x 610 x 305	14	16	CP2424	CP2424G	22.20 x 22.20	564 x 564	22.50 x 22.50	572 x 572	2	Quarter-turn	5.00	127
CSD302412SS	30.00 x 24.00 x 12.00	762 x 610 x 305	14	16	CP3024	CP3024G	28.20 x 22.20	716 x 564	28.50 x 22.50	724 x 572	2	Quarter-turn	5.00	127
CSD302412SS6	30.00 x 24.00 x 12.00	762 x 610 x 305	14	16	CP3024	CP3024G	28.20 x 22.20	716 x 564	28.50 x 22.50	724 x 572	2	Quarter-turn	5.00	127
CSD303012SS	30.00 x 30.00 x 12.00	762 x 762 x 305	14	16	CP3030	CP3030	28.20 x 28.20	716 x 716	28.50 x 28.50	724 x 724	2	Quarter-turn	5.00	127
CSD303012SS6	30.00 x 30.00 x 12.00	762 x 762 x 305	14	16	CP3030	CP3030G	28.20 x 28.20	716 x 716	28.50 x 28.50	724 x 724	2	Quarter-turn	5.00	127
CSD362412SS	36.00 x 24.00 x 12.00	914 x 610 x 305	14	16	CP3624	CP3624G	34.20 x 22.20	869 x 564	34.50 x 22.50	876 x 572	2	Quarter-turn	5.00	127
CSD362412SS6	36.00 x 24.00 x 12.00	914 x 610 x 305	14	16	CP3624	CP3624G	34.20 x 22.20	869 x 564	34.50 x 22.50	876 x 572	2	Quarter-turn	5.00	127
CSD363012SS	36.00 x 30.00 x 12.00	914 x 762 x 305	14	14	CP3630	CP3630G	34.20 x 28.20	869 x 716	34.50 x 28.50	876 x 724	2	Quarter-turn	5.00	127
CSD363012SS6	36.00 x 30.00 x 12.00	914 x 762 x 305	14	14	CP3630	CP3630G	34.20 x 28.20	869 x 716	34.50 x 28.50	876 x 724	2	Quarter-turn	5.00	127

Catalog numbers ending in 6 are Type 316L stainless steel.

Purchase panels separately. Optional stainless steel, composite and aluminum panels are also available for most sizes.

Optional NEMA style steel and stainless steel panels require conversion kit catalog number CCPM4.

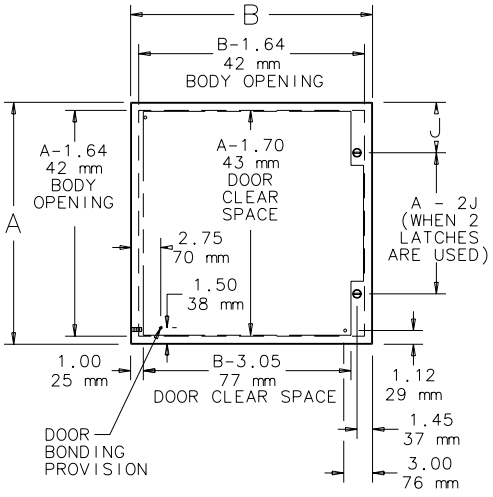

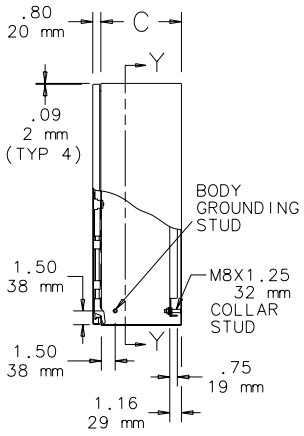

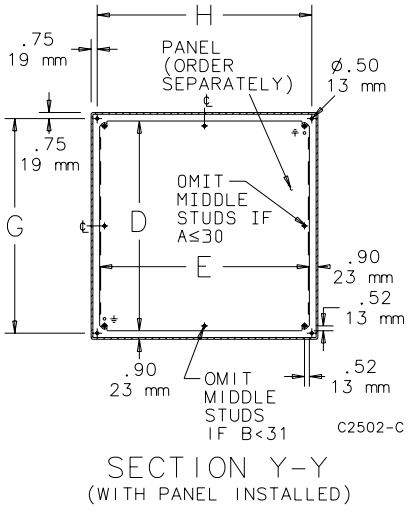

SECTION Y-Y
(WITH PANEL INSTALLED)

Standard Product **One-Door with Window**

Catalog Number	AxBxC in.	AxBxC mm	Door Ga.	Body Ga.	Panel	Panel Size D x E (in.)	Panel Size D x E (mm)	Mounting G x H (in.)	Mounting G x H (mm)	Window Size M x N (in.)	Window Size M x N (mm)	Latch Qty.	Style	J (in.)	J (mm)
CSD12126WSS	12.00 x 12.00 x 6.00	305 x 305 x 152	16	16	CP1212	10.20 x 10.20	259 x 259	10.50 x 10.50	267 x 267	8.74 x 7.10	222 x 180	1	Quarter-turn	6.00	152
CSD16126WSS	16.00 x 12.00 x 6.00	406 x 305 x 152	16	16	CP1612	14.20 x 10.20	361 x 259	14.50 x 10.50	368 x 267	12.74 x 7.10	324 x 180	1	Quarter-turn	8.00	203
CSD20166WSS	20.00 x 16.00 x 6.00	508 x 406 x 152	16	16	CP2016	18.20 x 14.20	462 x 361	18.50 x 14.50	470 x 368	16.74 x 11.10	425 x 282	1	Quarter-turn	10.00	254
CSD20206WSS	20.00 x 20.00 x 6.00	508 x 508 x 152	16	16	CP2020	18.20 x 18.20	462 x 462	18.50 x 18.50	470 x 470	16.74 x 15.10	425 x 384	1	Quarter-turn	10.00	254
CSD20168WSS	20.00 x 16.00 x 8.00	508 x 406 x 203	16	16	CP2016	18.20 x 14.20	462 x 361	18.50 x 14.50	470 x 368	16.74 x 11.10	425 x 282	1	Quarter-turn	10.00	254
CSD20208WSS	20.00 x 20.00 x 8.00	508 x 508 x 203	16	16	CP2020	18.20 x 18.20	462 x 462	18.50 x 18.50	470 x 470	16.74 x 15.10	425 x 384	1	Quarter-turn	10.00	254
CSD24208WSS	24.00 x 20.00 x 8.00	610 x 508 x 203	16	16	CP2420	22.20 x 18.20	564 x 462	22.50 x 18.50	572 x 470	20.74 x 15.10	527 x 384	1	Quarter-turn	12.00	305
CSD24248WSS	24.00 x 24.00 x 8.00	610 x 610 x 203	14	16	CP2424	22.20 x 22.20	564 x 564	22.50 x 22.50	572 x 572	20.74 x 17.68	527 x 449	2	Quarter-turn	5.00	127
CSD30248WSS	30.00 x 24.00 x 8.00	762 x 610 x 203	14	16	CP3024	28.20 x 22.20	716 x 564	28.50 x 22.50	724 x 572	26.74 x 17.68	679 x 449	2	Quarter-turn	5.00	127
CSD161210WSS	16.00 x 12.00 x 10.00	406 x 305 x 254	16	16	CP1612	14.20 x 10.20	361 x 259	14.50 x 10.50	368 x 267	12.74 x 7.10	324 x 180	1	Quarter-turn	8.00	203
CSD201610WSS	20.00 x 16.00 x 10.00	508 x 406 x 254	16	16	CP2016	18.20 x 14.20	462 x 361	18.50 x 14.50	470 x 368	16.74 x 11.10	425 x 282	1	Quarter-turn	10.00	254
CSD202010WSS	20.00 x 20.00 x 10.00	508 x 508 x 254	16	16	CP2020	18.20 x 18.20	462 x 462	18.50 x 18.50	470 x 470	16.74 x 15.10	425 x 384	1	Quarter-turn	10.00	254
CSD242010WSS	24.00 x 20.00 x 10.00	610 x 508 x 254	16	16	CP2420	22.20 x 18.20	564 x 462	22.50 x 18.50	572 x 470	20.74 x 15.10	527 x 384	1	Quarter-turn	12.00	305
CSD242410WSS	24.00 x 24.00 x 10.00	610 x 610 x 254	14	16	CP2424	22.20 x 22.20	564 x 564	22.50 x 22.50	572 x 572	20.74 x 17.68	527 x 449	2	Quarter-turn	5.00	127
CSD302410WSS	30.00 x 24.00 x 10.00	762 x 610 x 254	14	16	CP3024	28.20 x 22.20	716 x 564	28.50 x 22.50	724 x 572	26.74 x 17.68	679 x 449	2	Quarter-turn	5.00	127
CSD202012WSS	20.00 x 20.00 x 12.00	508 x 508 x 305	14	16	CP2020	18.20 x 18.20	462 x 462	18.50 x 18.50	470 x 470	16.74 x 15.10	425 x 384	1	Quarter-turn	10.00	254
CSD302412WSS	30.00 x 24.00 x 12.00	762 x 610 x 305	14	16	CP3024	28.20 x 22.20	716 x 564	28.50 x 22.50	724 x 572	26.74 x 17.68	679 x 449	2	Quarter-turn	5.00	127

Purchase panels separately.

Optional NEMA style steel and stainless steel panels require conversion kit catalog number CCPM4.

Material is stainless steel Type 304.

For Conductive Panels, add a "G" to the panel catalog number.

CONCEPT Single-Door Wall-Mounted Enclosures with Windows

