C-Series

REMOTE OPERATED CIRCUIT BREAKER

The C-Series remote operated circuit breaker consists of a custom designed remote operated motor module (housed within a circuit breaker molding) coupled to a C-Series hydraulic-magnetic circuit breaker. The remote operated circuit breaker (ROCB) offers the convenience of remote ON, OFF, and Reset capability combined with the safety and accuracy of a standard magnetic current sensing device. This allows operation of the circuit breaker from various locations in a system, facility or site without sacrificing the ability to manually operate the breaker if required. Service, diagnostics, load shedding and power distribution control functions can now be performed in areas that were previously unattended, inaccessible.

The ROCB module can be mounted on either side of the host breaker, while occupying only the width of a standard C-Series pole. Several interface methods are available.





Product Highlights:

- ON-OFF and trip indication
- Load shedding
- Energy management
- Compact size
- Automatic reset capable
- Choice of interface styles
- Panel mounting
- Manual Operation Override
- Fits into industry standard cut-out

ROCB Motor Specifications:

- Voltage input: 12 VDC to 80 VDC
- Start current: < 1 amp
- Switching time: < 2 seconds
- Operating Temperature: -25˚C to 80˚C

Carling Technologies®
Innovative Designs. Powerful Solutions.

Carling Technologies, Inc.
60 Johnson Avenue, Plainville, CT 06062
Email: sales@carlingtech.com
Application Support: team2@carlingtech.com
Phone: 860.793.9281 **Fax:** 860.793.9231

www.carlingtech.com

To order a remote operated circuit breaker, add / plus the remote module part number to the end of the C-Series circuit breaker catalog number. ex. CA1BO24620121C/RB1110BU1C

Match color & mounting inserts of breaker.

/ RB 1 1 10 B U 1 C

1 Series	2 Mounting Position	3 Interface	4 Lead Length	5 Voltage Rating	6 Actuator Color	7 Mounting Insert	8 Agency Approval

1 SERIES
RB

2 MOUNTING POSITION
As viewed from back of breaker, line side up, pole 1 left.
1 Left Side
2 Right Side

3 INTERFACE
1 Flying Leads
2 Integral Connector
3 Flying Leads with 4 pin dual row connector (female)
4 Flying Leads with 4 pin dual row connector (male)

4 LEAD LENGTH

00	No Lead	**10**	10”	**21**	21”
01	1”	**11**	11”	**22**	22”
02	2”	**12**	12”	**23**	23”
03	3”	**13**	13”	**24**	24”
04	4”	**14**	14”	**25**	25”
05	5”	**15**	15”	**26**	26”
06	6”	**16**	16”	**27**	27”
07	7”	**17**	17”	**28**	28”
08	8”	**18**	18”	**29**	29”
09	9”	**19**	19”	**30**	30”
		20	20”		

5 VOLTAGE RATING
A 12 VDC
B 20-40 VDC
C 41-80 VDC

6 ACTUATOR COLOR
T White
U Black
V Red
W Yellow

7 MOUNTING INSERT
1 6-32 x 0.195”
2 ISO M3 x 5mm

8 AGENCY APPROVAL
C UL Recognized & CSA Accepted
E TUV Certified, UL Recognized & CSA Accepted
G UL 489 Listed & CSA Certified
I UL 1500 Ignition Protected,UL Recognized & CSA Accepted
J UL 489 Listed, CSA Certified & TUV Certified

Notes:
Integral and 4-pin dual row connectors not available with agency approval J or G: UL 489.

*Manufacturer reserves the right to change product specification without prior notice.

Dimensional Specifications: in. [mm]

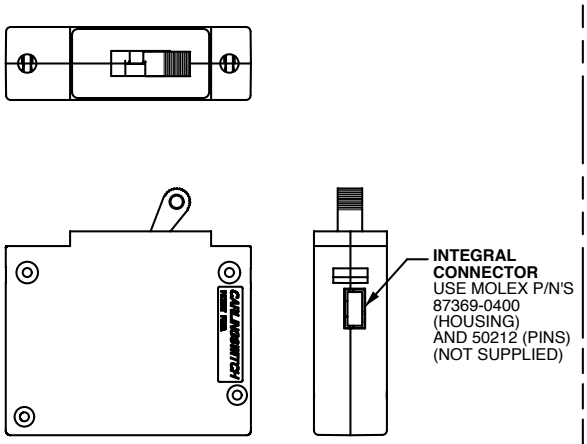

INTEGRAL CONNECTOR VERSION

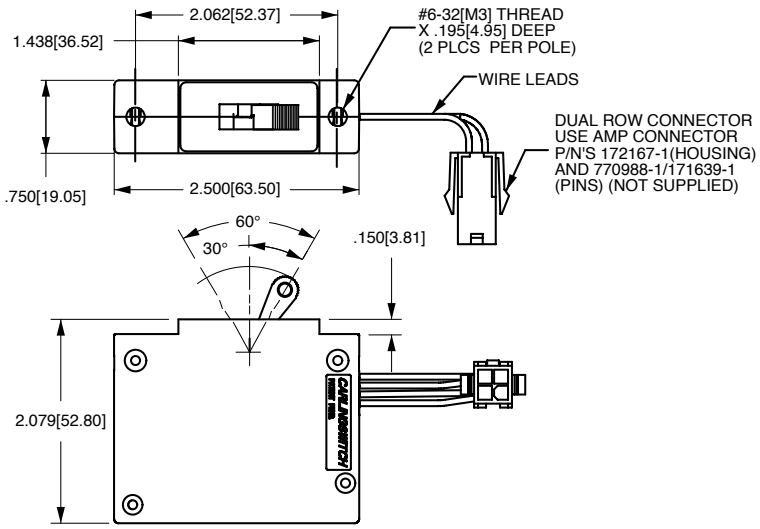

CONNECTOR WITH LEADS

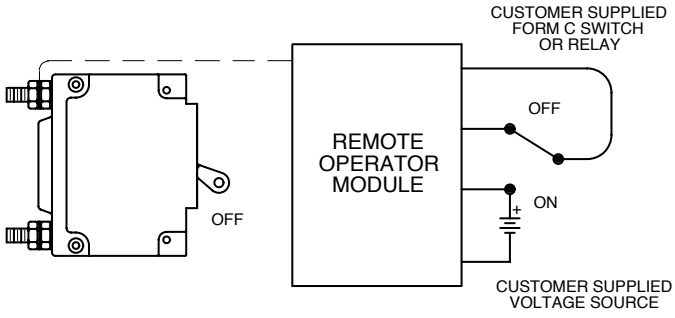

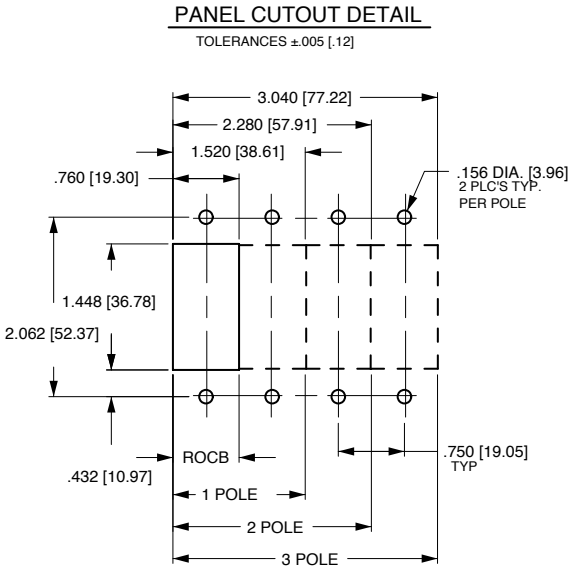

Notes:
1 All dimensions are in inches [millimeters].
2 Tolerance ±.020 [.51] unless otherwise specified.

Wire Instructions

CATALOG INTERFACE OPTION 1 (FLYING LEADS)
WIRING INSTRUCTIONS

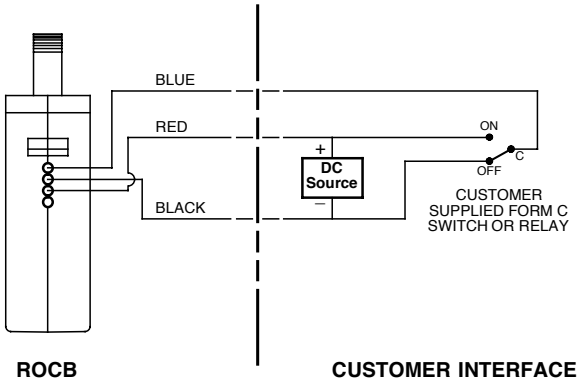

CATALOG INTERFACE OPTION 2 (INTEGRAL CONNECTOR)
WIRING INSTRUCTIONS

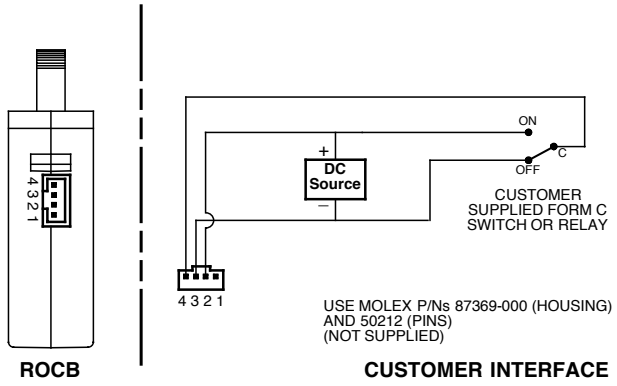

CATALOG INTERFACE OPTION 3
(FLYING LEADS WITH 4 PIN DUAL ROW CONNECTOR)
WIRING INSTRUCTIONS

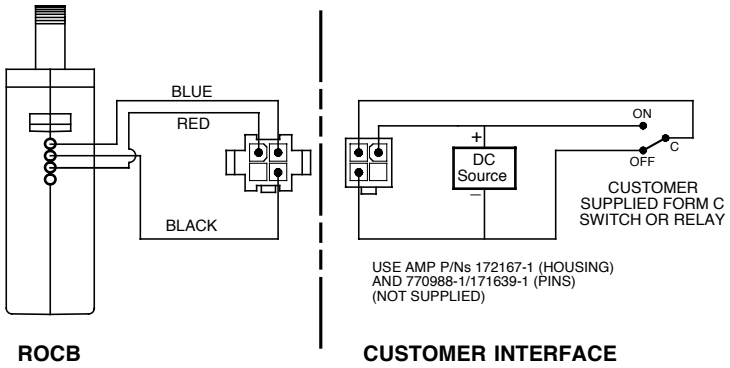

Wire Instructions

CATALOG INTERFACE OPTION 1 (FLYING LEADS)
WIRING INSTRUCTIONS

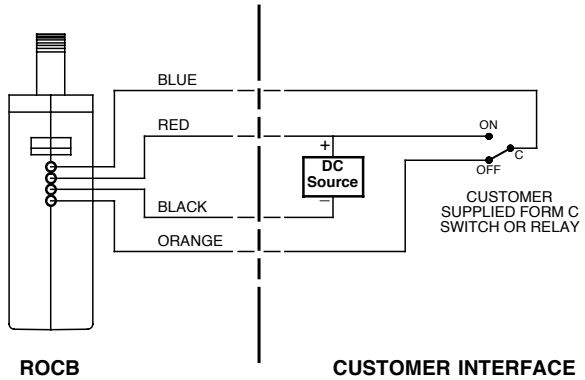

CATALOG INTERFACE OPTION 2 (INTEGRAL CONNECTOR)
WIRING INSTRUCTIONS

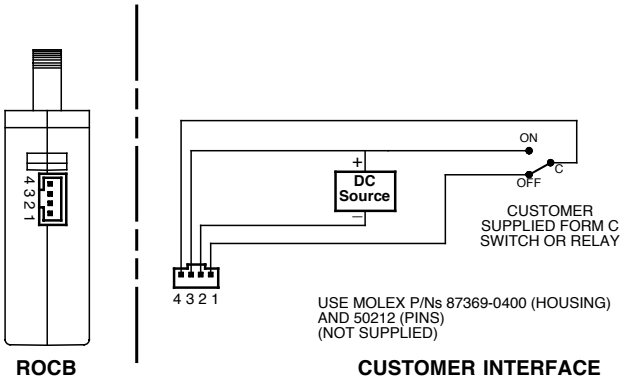

CATALOG INTERFACE OPTION 3
(FLYING LEADS WITH FEMALE 4 PIN DUAL ROW CONNECTOR)
WIRING INSTRUCTIONS

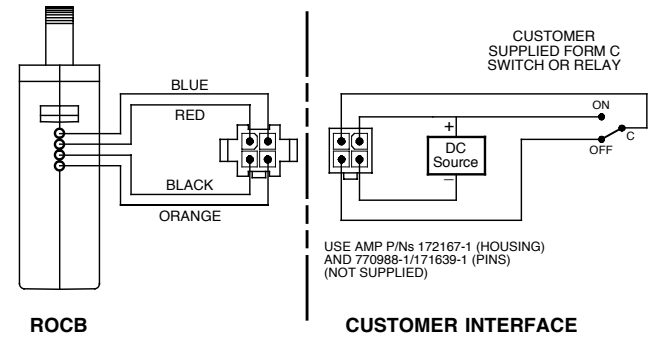

CATALOG INTERFACE OPTION 4
(FLYING LEADS WITH MALE 4 PIN DUAL ROW CONNECTOR)
WIRING INSTRUCTIONS

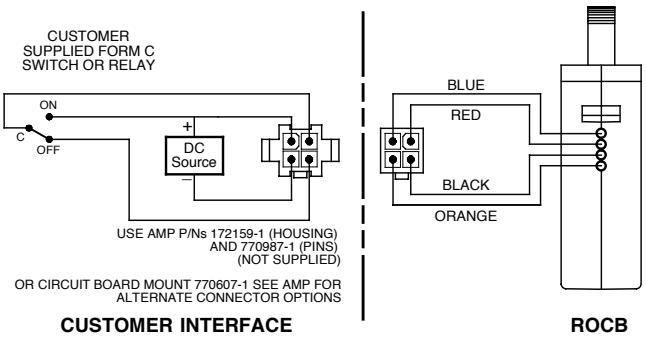

Email: sales@carlingtech.com Application Support: team2@carlingtech.com
Phone: (860) 793–9281 Fax: (860) 793–9231 **www.carlingtech.com**

Authorized Sales Representatives and Distributors

Click on a region of the map below to find your local representatives and distributors or visit ***www.carlingtech.com/findarep***.



About Carling

Founded in 1920, Carling Technologies is a leading manufacturer of electrical and electronic switches and assemblies, circuit breakers, electronic controls, power distribution units, and multiplexed power distribution systems. With four ISO registered manufacturing facilities and technical sales offices worldwide, Carling Technologies Sales, Service and Engineering teams do much more than manufacture electrical components, they engineer powerful solutions! To learn more about Carling please visit **www.carlingtech.com/company-profile.**

To view all of Carling's environmental, quality, health & safety certifications please visit **www.carlingtech.com/environmental-certifications**

Worldwide Headquarters

Carling Technologies, Inc.
60 Johnson Avenue, Plainville, CT 06062
Phone: 860.793.9281 **Fax:** 860.793.9231
Email: sales@carlingtech.com

Northern Region Sales Office: nrsm@carlingtech.com
Southeast Region Sales Office: sersm@carlingtech.com
Midwest Region Sales Office: mrsm@carlingtech.com
West Region Sales Office: wrsm@carlingtech.com
Latin America Sales Office: larsm@carlingtech.com

Asia-Pacific Headquarters

Carling Technologies, Asia-Pacific Ltd.,
Suite 1607, 16/F Tower 2, The Gateway,
Harbour City, 25 Canton Road,
Tsimshatsui, Kowloon, Hong Kong
Phone: Int + 852-2737-2277 **Fax:** Int + 852-2736-9332
Email: sales@carlingtech.com.hk

Shenzhen, China: shenzhen@carlingtech.com
Shanghai, China: shanghai@carlingtech.com
Pune, India: india@carlingtech.com
Kaohsiung, Taiwan: taiwan@carlingtech.com
Yokohama, Japan: japan@carlingtech.com

Europe | Middle East | Africa Headquarters

Carling Technologies LTD
4 Airport Business Park, Exeter Airport,
Clyst Honiton, Exeter, Devon, EX5 2UL, UK
Phone: Int + 44 1392.364422 **Fax:** Int + 44 1392.364477
Email: ltd.sales@carlingtech.com

Germany: gmbh@carlingtech.com
France: sas@carlingtech.com

Carling Technologies®
Innovative Designs. Powerful Solutions.