THE INFORMATION CONTAINED IN THIS DRAWING IS THE SOLE PROPERTY OF BUD INDUSTRIES INC. ANY REPRODUCTION IN PART OR WHOLE WITHOUT THE WRITTEN PERMISSION OF BUD INDUSTRIES INC. IS PROHIBITED.

DWG. NO.	CN-5710
ISSUE	REVISIONS

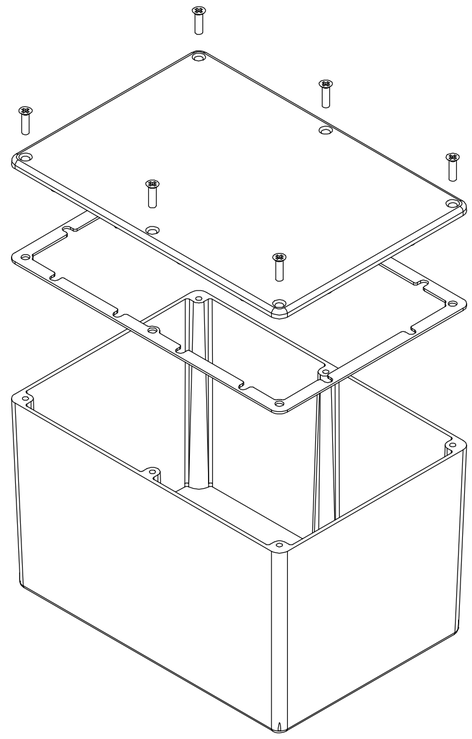

MATERIAL - ALUMINUM ALLOY #ADC-12

FINISH - NATURAL (CONTACT BUD FACTORY FOR ALTERNATE FINISHES)

GASKET - RATED IP65 NEOPRENE, SELF-ADHESIVE, 3mm THICK, COLOR BLACK

SCREWS - STAINLESS STEEL, M3.5 x 12mm LG., CSK. HEAD, SELF-THREADING

ALL HOLE DIAMETERS HAVE ±.005 TOLERANCE.

ALL OTHER DIMENSIONS HAVE ±.015 TOLERANCE.

ENCLOSURES ARE SHIPPED UNASSEMBLED WITH ALL ITEMS SHOWN.

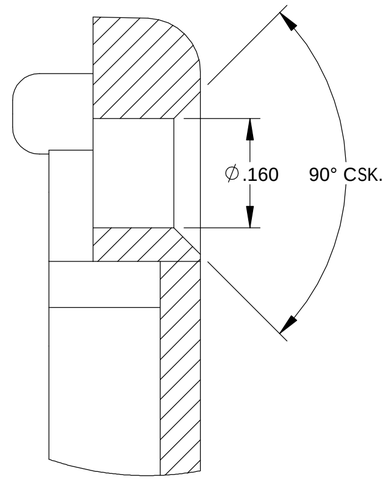

DETAIL D
SCALE 6 : 1

SECTION A-A

BODY

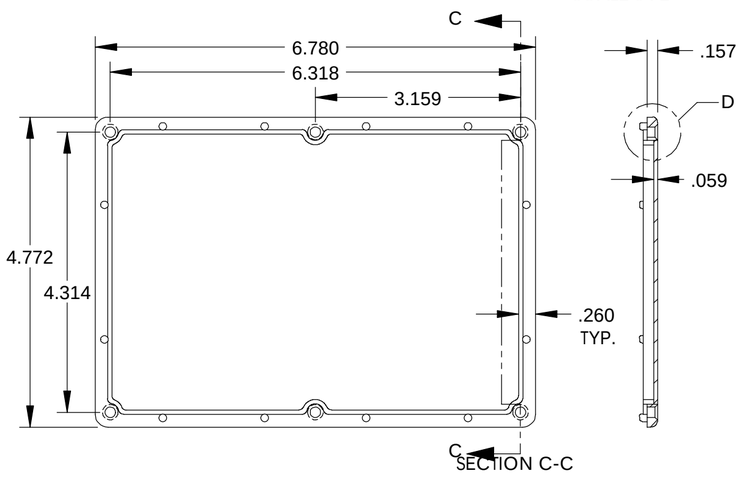

SECTION C-C

COVER

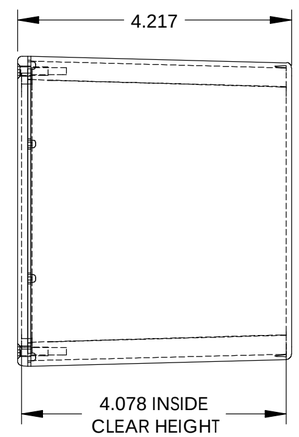

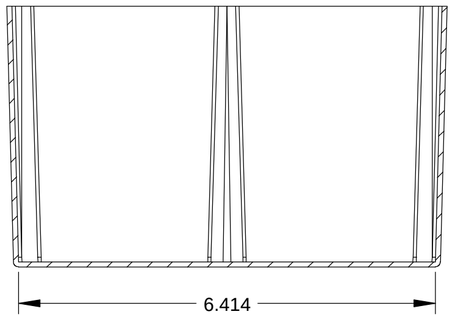

SECTION B-B

PARTS LIST

QTY.	USED ON		

+/-.005 BETWEEN HOLE CENTERS
+/-.015 FROM SHEARED EDGE
+/-.032 FROM A BENT SURFACE
+/-.062 BETWEEN ASSEMBLED SURFACES
UNLESS OTHERWISE SPECIFIED

MATERIAL AS NOTED

FINISH AS NOTED

DO NOT SCALE DRAWING

CAD GENERATED DRAWING. DO NOT MANUALLY UPDATE

APPROVALS	DATE
DRAWN DAB	3-31-06
CHECKED	
APPROVED	

BUD INDUSTRIES INC.

DIE CAST ALUMINUM ENCLOSURE

SIZE C | DWG. NO. CN-5710 | REV.

SCALE | CAD FILE: | SHEET 1 OF 1

Mouser Electronics

Authorized Distributor

Click to View Pricing, Inventory, Delivery & Lifecycle Information:

Bud Industries:

CN-5710