CLB-Series

THERMAL CIRCUIT PROTECTORS

Rating:
3 to 60A, 125-250VAC, 32VDC
Approvals:
UL, CUL, CSA, TUV, CE
UL1500/ISO8846 for ignition protection/marine
Dielectric Strength:
2500 VAC/1 minute
Interrupting capacity:
2500 amps @ 32 VDC
Insulation Resistance:
100M ohms
Operating Temperature:
-10°C to 60°C
Voltage drop:
< 0.25 V
Applications:
Household Appliances
Transportation
Marine
Power Strips
Medical Equipment
Audio Visual Equipment
Power Supplies
ROHS Compliant



A COMPACT, SINGLE POLE, PUSH-TO-RESET FAMILY OF THERMAL CIRCUIT BREAKERS

Dimensional Specifications:

3-40A Construction

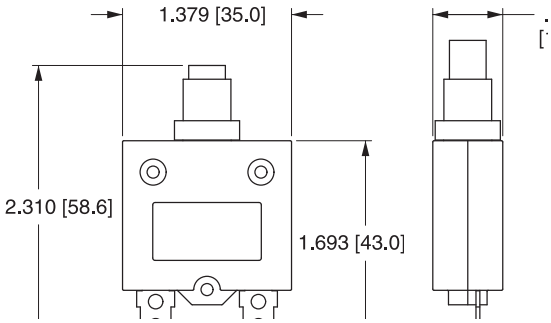

50 & 60A Construction

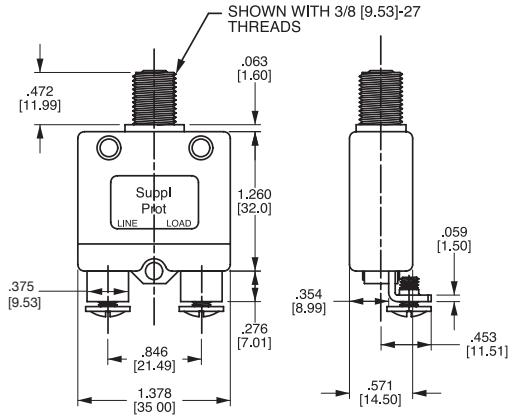

Carling Technologies™
Innovative Designs. Powerful Solutions.

Carling Technologies, Inc.
60 Johnson Avenue, Plainville, CT 06062
Email: sales@carlingtech.com
Application Support: team2@carlingtech.com
Phone: 860.793.9281 **Fax:** 860.793.9231

www.carlingtech.com

CLB - 10 3 - 12 C 3 N - B - A / 10

1 Series	2 Rating	3 Voltage	4 Mounting Hole	5 Bushing Type	6 Mounting Nut	7 Indicator Plate	8 Button	9 Terminal	10 Button Marking

1 SERIES
CLB

3 VOLTAGE
3 125-250VAC/ 32 VDC

2 RATING

03	3 amp	**15**	15 amp
04	4 amp	**18**	18 amp
05	5 amp	**20**	20 amp
06	6 amp	**25**	25 amp
07	7 amp	**30**	30 amp
08	8 amp	**35**	35 amp
10	10 amp	**40**	40 amp
12	12 amp	**50**[12]	50 amp
13	13 amp	**60**[12]	60 amp

4 MOUNTING HOLE
11[1] M11
12[2] M12
00[3] Snap In Style
27[4] 3/8" 27 UNS

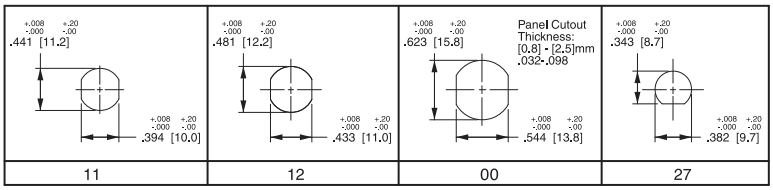

5 BUSHING
METAL
A[6] Type A
B[6] Type B
J[8] Type J
PLASTIC
C[5] Type C
D[7] Type D
E[8] Type E

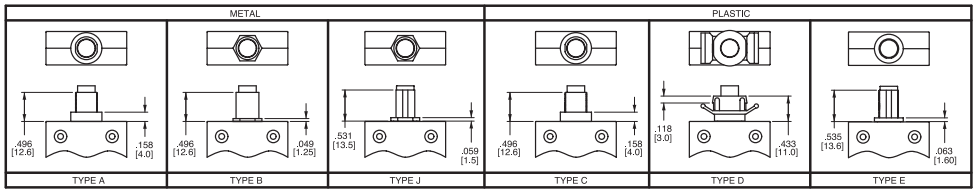

6 MOUNTING NUT[9]
N None
1 Type 1
2 Type 2
3 Type 3
4 Type 4
5 Type 5
6[4,14] Type 6
7[4] Type 7
8[4] Type 8

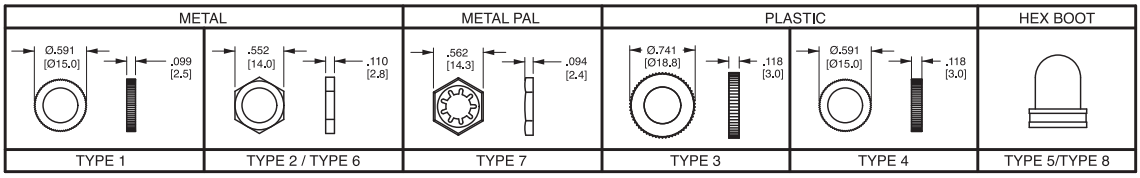

NOTE: Type 5 is clear hex boot. Type 8 is black hex boot (available for bushings E & J only); Type 3 nut includes molded in "PRESS TO RESET" marking.

7 INDICATOR PLATE[9]
N None
A Embossed
B Silver Printing on Black

All indicator plates are marked "Suppl. Prot. press to reset".

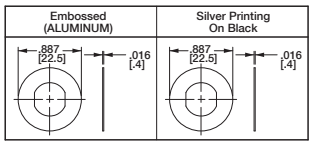

8 BUTTON
B Black **R** Red **W** White

Notes: All dimensions are in.[mm]. Tolerance ±.005 [.127] unless otherwise specified.
1 Used with bushing A or B only.
2 Used with bushing C only.
3 Used with bushing D only.
4 Used with bushing E & J only.
5 Used with M12 mounting hole only.
6 Used with M11 mounting hole only.
7 Used with mounting hole 00 only.
8 Used with 27 mounting hole only.
9 All hardware available separately. Consult factory.
10 > 35 amp ratings must use solder joint to connect wire to non-screw type terminals.
11 Terminals are .040 [1.0] thickness for rating> 35, & .315 [.8] thickness is for ratings < 35 amps.
12 Available only with 10-24 unc. screw terms. (select type F, G, H, J only.) UL, CUL only.
13 Amp rating must match button marking (ex: "20" will be marked on the button of the breaker)
14 Thickness is 3.0 mm, .118 in.
15 Screw terminals are 8-32 UNC

9 TERMINAL[10,11,15]
A Type A
B Type B
C Type C
D Type D
E Type E
F Type F
G Type G
H Type H
J Type J

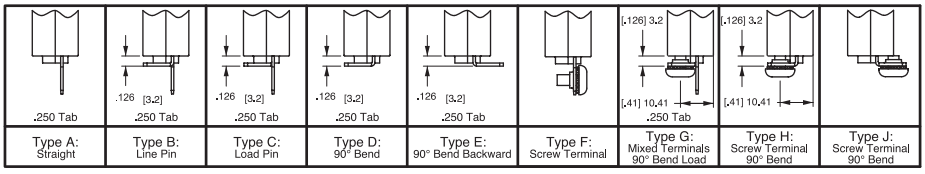

10 BUTTON MARKING (IF BLANK, NO MARKING.)[13]
Button Marking Orientation: line (20) load

03	3 amp	**06**	6 amp	**10**	10 amp	**15**	15 amp	**25**	25 amp	**40**	40 amp
04	4 amp	**07**	7 amp	**12**	12 amp	**18**	18 amp	**30**	30 amp	**50**	50 amp
05	5 amp	**08**	8 amp	**13**	13 amp	**20**	20 amp	**35**	35 amp	**60**	60 amp

Time Delay

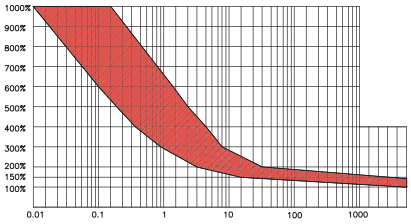

DERATING FACTOR	
–10°C	X1.70
–5°C	X1.60
0°C	X1.50
5°C	X1.40
10°C	X1.30
15°C	X1.20
20°C	X1.10
25°C	X1.00

DERATING FACTOR	
30°C	X0.90
35°C	X0.85
40°C	X0.80
45°C	X0.75
50°C	X0.70
55°C	X0.65
60°C	X0.60

OVERLOAD	TRIP TIME
100 %	NO TRIP
150 %	TRIP IN 1 HR
200 %	4.0~40 sec
300 %	0.9~8.0 sec
400 %	0.42~5.0 sec
500 %	0.25~3.0 sec
600 %	0.1~1.8 sec

Notes:
Breaker must hold 100% of rated current and must trip at 150% and above, within the time limits shown in curve. Trip times specified at 25° ambient with no preloading.
1 To adjust the breaker rating for ambient temperature multiply the breaker rating by the factor. (ex: 5 amp rating at 0°C: 5 x .67 = 3.3 amp. Select 3 amp rating.)

*Manufacturer reserves the right to change product specification without prior notice.

CB_CLB_03_2015

Email: sales@carlingtech.com Application Support: team2@carlingtech.com
Phone: (860) 793–9281 Fax: (860) 793–9231 **www.carlingtech.com**