C-Box Hinged Cover with Knockouts

NEMA 1



Application

- Designed for general purpose indoor commercial use as a junction, pull or switch box.
- Hinged cover with latch provides easy access during installation and maintenance.

Standards

- UL-50 Type 1
- CSA Type 1
- **Complies with**
  - NEMA Type 1
  - IEC 60529, IP30

Construction

- Formed and spot welded from 16 or 14 gauge steel depending on size.
- Formed steel covers close by use of slotted quarter turn latch.
- Full swing door using butt hinges.
- Easily removed knockouts on all 4 sides (see drawings for sizes and locations).
- Through holes in back for wall mounting.
- Grounding location embossed in body.

Finish

- Enclosure and cover are finished in ANSI 61 gray powder coating.

Accessories

- N1JLK Lock Kit...*see page* ***431***

Part No.	Overall Dimensions A	B	C	Meeting Centers D	E	F	G	Knockout Pattern Sides	Knockout Pattern Top & Bottom	Ship Wt. lbs.
CHKO663	6	6	3.5	3.00	5.00	0.50	0.28	B - C - D	B - C - D	3
CHKO644	6	4	4	3.00	3.00	0.50	0.28	B - C - D	A - B	3
CHKO664	6	6	4	3.00	5.00	0.50	0.28	B - C - D	B - C - D	3
CHKO864	8	6	4	5.00	5.00	0.50	0.28	F - G - H - I	B - C - D	4
CHKO884	8	8	4	5.00	7.00	0.50	0.28	F - G - H - I	F - G - H - I	5
CHKO1084	10	8	4	7.00	7.00	0.50	0.28	F - G - H - I	F - G - H - I	6
CHKO10104	10	10	4	7.00	9.00	0.50	0.28	F - G - H - I	C - D - E - F - G	7
CHKO1284	12	8	4	9.00	7.00	0.50	0.28	C - D - E - F - G	F - G - H - I	8
CHKO12104	12	10	4	9.00	9.00	0.50	0.28	C - D - E - F - G	C - D - E - F - G	8
CHKO12124	12	12	4	9.00	11.00	0.50	0.28	C - D - E - F - G	C - D - E - F - G	9
CHKO16124	16	12	4	13.00	11.00	0.50	0.28	B - C - D - E - F - G - H	C - D - E - F - G	12
CHKO18124	18	12	4	15.00	11.00	0.50	0.28	A - B - C - D - E - F - G - H - I	C - D - E - F - G	12
CHKO666	6	6	6	3.00	5.00	0.50	0.28	B - C - D	B - C - D	4
CHKO886	8	8	6	5.00	7.00	0.50	0.28	F - G - H - I	F - G - H - I	6
CHKO1086	10	8	6	7.00	7.00	0.50	0.28	F - G - H - I	F - G - H - I	7

Chart continued on next page....

Technical references and CAD downloads available at www.hammondmfg.com

All dimensions in inches unless specified otherwise

Quality Products. Service Excellence.

© Hammond Manufacturing

Canada: 519.822.2960 or 905.456.3770 USA: 716.630.7030

Data Subject to change without notice

C-Box Hinged Cover with Knockouts

NEMA 1

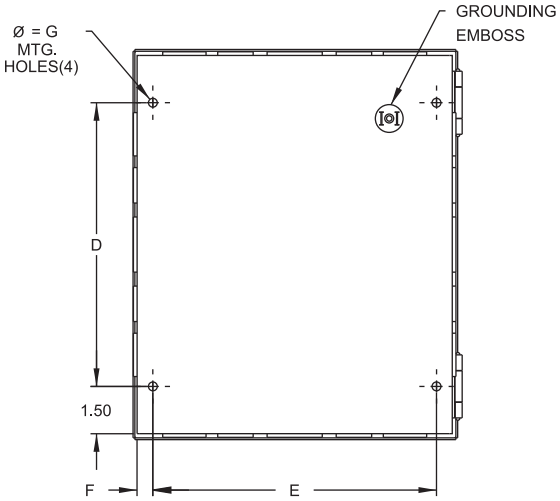

Rear View

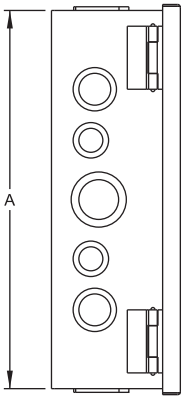

Side View

See knockout pattern in table

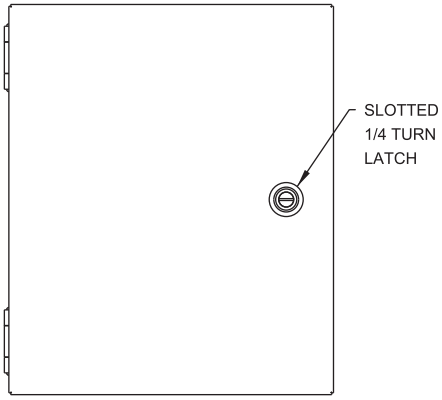

Front View

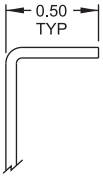

Body Flange Detail

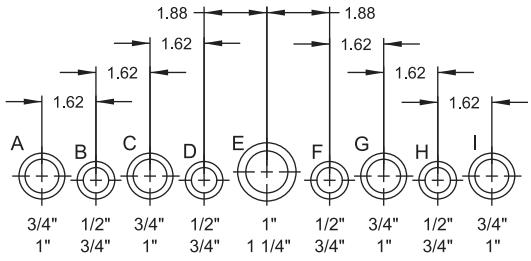

Conduit Sizes

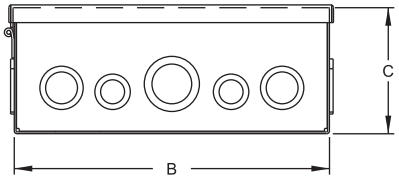

Bottom View

See knockout pattern in table

Part No.	Overall Dimensions A	B	C	Meeting Centers D	E	F	G	Knockout Pattern Sides	Knockout Pattern Top & Bottom	Ship Wt. lbs.
CHKO10106	10	10	6	7.00	9.00	0.50	0.28	F - G - H - I	C - D - E - F - G	8
CHKO12106	12	10	6	9.00	9.00	0.50	0.28	C - D - E - F - G	C - D - E - F - G	8
CHKO12126	12	12	6	9.00	11.00	0.50	0.28	C - D - E - F - G	C - D - E - F - G	10
CHKO16126	16	12	6	13.00	11.00	0.50	0.28	B - C - D - E - F - G - H	C - D - E - F - G	13
CHKO16166	16	16	6	13.00	15.00	0.50	0.28	B - C - D - E - F - G - H	B - C - D - E - F - G - H	14
CHKO18126	18	12	6	15.00	11.00	0.50	0.28	A - B - C - D - E - F - G - H - I	C - D - E - F - G	14
CHKO18186	18	18	6	15.00	17.00	0.50	0.28	A - B - C - D - E - F - G - H - I	A - B - C - D - E - F - G - H - I	20
CHKO24186	24	18	6	21.00	17.00	0.50	0.28	A - B - C - D - E - F - G - H - I	A - B - C - D - E - F - G - H - I	24
CHKO24246	24	24	6	21.00	22.50	0.75	0.44	A - B - C - D - E - F - G - H - I	A - B - C - D - E - F - G - H - I	40
CHKO30246	30	24	6	27.00	22.50	0.75	0.44	A - B - C - D - E - F - G - H - I	A - B - C - D - E - F - G - H - I	49
CHKO36246	36	24	6	33.00	22.50	0.75	0.44	A - B - C - D - E - F - G - H - I	A - B - C - D - E - F - G - H - I	57
CHKO36248	36	24	8	33.00	22.50	0.75	0.44	A - B - C - D - E - F - G - H - I	A - B - C - D - E - F - G - H - I	60

Technical references and CAD downloads available at www.hammondmfg.com

All dimensions in inches unless specified otherwise

© Hammond Manufacturing

Canada: 519.822.2960 or 905.456.3770 USA: 716.630.7030

Data Subject to change without notice