TEXAS INSTRUMENTS
Data sheet acquired from Harris Semiconductor
SCHS035C – Revised September 2003

CD4030B Types

CMOS Quad Exclusive-OR Gate

High-Voltage Types (20-Volt Rating)

■ CD4030B types consist of four independent Exclusive-OR gates. The CD4030B provides the system designer with a means for direct implementation of the Exclusive-OR function.

The CD4030B types are supplied in 14-lead hermetic dual-in-line ceramic packages (F3A suffix), 14-lead dual-in-line plastic packages (E suffix), 14-lead small-outline packages (M, MT, M96, and NSR suffixes), and 14-lead thin shrink small-outline packages (PW and PWR suffixes).

Features:

- Medium-speed operation—t_{PHL}, t_{PLH} = 65 ns (typ.) at V_{DD} = 10 V, C_L = 50 pF
- 100% tested for quiescent current at 20 V
- Standardized, symmetrical output characteristics
- 5-V, 10-V, and 15-V parametric ratings
- Maximum input current of 1 μA at 18 V over full package-temperature range; 100 nA at 18 V and 25°C
- Noise margin (over full package-temperature range):
  1 V at V_{DD} = 5 V
  2 V at V_{DD} = 10 V
  2.5 V at V_{DD} = 15 V
- Meets all requirements of JEDEC Tentative Standard No. 13B, "Standard Specifications for Description of 'B' Series CMOS Devices"

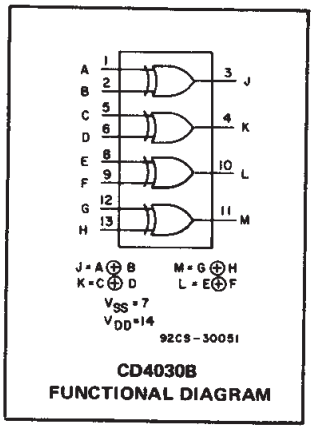

CD4030B
FUNCTIONAL DIAGRAM

Applications:

- Even and odd-parity generators and checkers
- Logical comparators
- Adders/subtractors
- General logic functions

MAXIMUM RATINGS, *Absolute-Maximum Values:*

DC SUPPLY-VOLTAGE RANGE, (V_{DD})
(Voltages referenced to V_{SS} Terminal) ..... -0.5V to +20V
INPUT VOLTAGE RANGE, ALL INPUTS ..... -0.5V to V_{DD} +0.5V
DC INPUT CURRENT, ANY ONE INPUT ..... ±10mA
POWER DISSIPATION PER PACKAGE (P_D):
For T_A = -55°C to +100°C 500mW
For T_A = +100°C to +125°C ..... Derate Linearity at 12mW/°C to 200mW
DEVICE DISSIPATION PER OUTPUT TRANSISTOR
FOR T_A = FULL PACKAGE-TEMPERATURE RANGE (All Package Types) 100mW
OPERATING-TEMPERATURE RANGE (T_A) ..... -55°C to +125°C
STORAGE TEMPERATURE RANGE (T_{stg}) ..... -65°C to +150°C
LEAD TEMPERATURE (DURING SOLDERING):
At distance 1/16 ± 1/32 inch (1.59 ± 0.79mm) from case for 10s max ..... +265°C

TERMINAL DIAGRAM
Top View

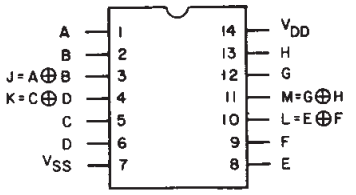

RECOMMENDED OPERATING CONDITIONS

For maximum reliability, nominal operating conditions should be selected so that operation is always within the following ranges:

CHARACTERISTIC	LIMITS		UNITS
	MIN.	MAX.	
Supply-Voltage Range (For T_A = Full Package Temperature Range)	3	18	V

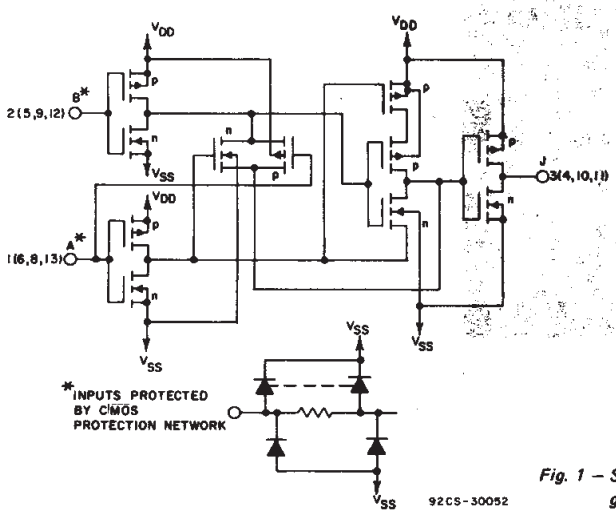

TRUTH TABLE FOR ONE OF FOUR IDENTICAL GATES

A	B	J
0	0	0
1	0	1
0	1	1
1	1	0

1 = HIGH LEVEL
0 = LOW LEVEL

Fig. 1 – Schematic diagram (1 of 4 identical gates).

Copyright © 2003, Texas Instruments Incorporated

STATIC ELECTRICAL CHARACTERISTICS

CHARACTERISTIC	CONDITIONS			LIMITS AT INDICATED TEMPERATURES (°C)							UNITS
	V_O (V)	V_{IN} (V)	V_{DD} (V)	−55	−40	+85	+125	+25 Min.	+25 Typ.	+25 Max.	
Quiescent Device Current, I_{DD} Max.	–	0,5	5	0.25	0.25	7.5	7.5	—	0.01	0.25	μA
	–	0,10	10	0.5	0.5	15	15	—	0.01	0.5	
	–	0,15	15	1	1	30	30	—	0.01	1	
	–	0,20	20	5	5	150	150	—	0.02	5	
Output Low (Sink) Current I_{OL} Min.	0.4	0,5	5	0.64	0.61	0.42	0.36	0.51	1	–	mA
	0.5	0,10	10	1.6	1.5	1.1	0.9	1.3	2.6	–	
	1.5	0,15	15	4.2	4	2.8	2.4	3.4	6.8	–	
Output High (Source) Current, I_{OH} Min.	4.6	0,5	5	−0.64	−0.61	−0.42	−0.36	−0.51	−1	–	
	2.5	0,5	5	−2	−1.8	−1.3	−1.15	−1.6	−3.2	–	
	9.5	0,10	10	−1.6	−1.5	−1.1	−0.9	−1.3	−2.6		
	13.5	0,15	15	−4.2	−4	−2.8	−2.4	−3.4	−6.8		
Output Voltage: Low-Level, V_{OL} Max.	–	0,5	5	0.05				–	0	0.05	V
	–	0,10	10	0.05				–		0.05	
	–	0,15	15	0.05				–	0	0.05	
Output Voltage: High-Level, V_{OH} Min.	–	0,5	5	4.95				4.95	5	–	
	–	0,10	10	9.95				9.95	10	–	
	–	0,15	15	14.95				14.95	15	–	
Input Low Voltage, V_{IL} Max.	0.5,4.5	–	5	1.5				–	–	1.5	V
	1,9	–	10	3				–	–	3	
	1.5,13.5	–	15	4				–	–	4	
Input High Voltage, V_{IH} Min.	0.5,4.5	–	5	3.5				3.5	–	–	
	1,9	–	10	7				7	–	–	
	1.5,13.5	–	15	11				11	–	–	
Input Current I_{IN} Max.	–	0,18	18	±0.1	±0.1	±1	±1	–	$±10^{-5}$	±0.1	μA

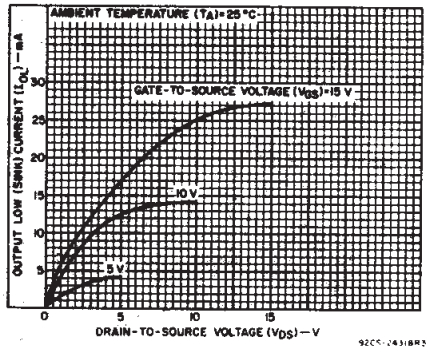

Fig. 2 – Typical output low (sink) current characteristics.

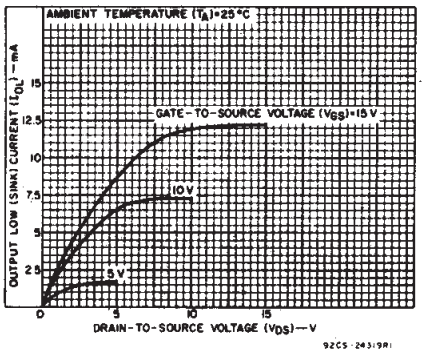

Fig. 3 – Minimum output low (sink) current characteristics.

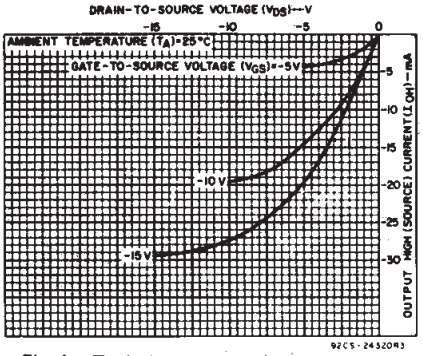

Fig. 4 – Typical output high (source) current characteristics.

DYNAMIC ELECTRICAL CHARACTERISTICS at T_A = 25°C; Input t_r, t_f = 20 ns, C_L = 50 pF, R_L = 200 KΩ

CHARACTERISTIC		CONDITIONS V_{DD} (V)	LIMITS Typ.	LIMITS Max.	UNITS
Propagation Delay Time,	t_{PLH}, t_{PHL}	5	140	280	ns
		10	65	130	
		15	50	100	
Transition Time,	t_{THL}, t_{TLH}	5	100	200	ns
		10	50	100	
		15	40	80	
Input Capacitance,	C_{IN}	Any Input	5	7.5	pF

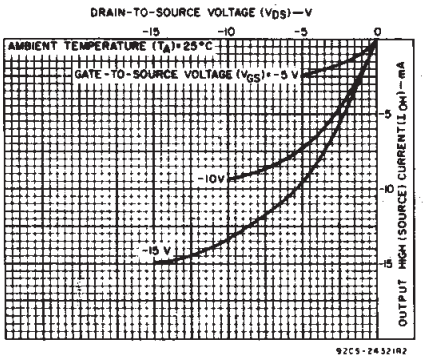

Fig. 5 – Minimum output high (source) current characteristics.

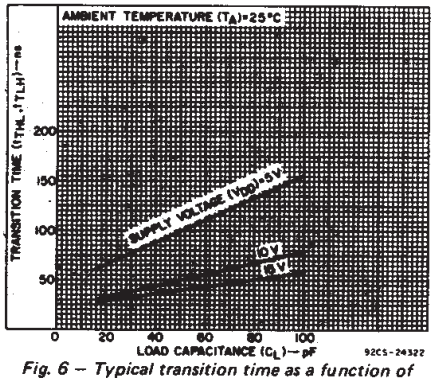

Fig. 6 – Typical transition time as a function of load capacitance.

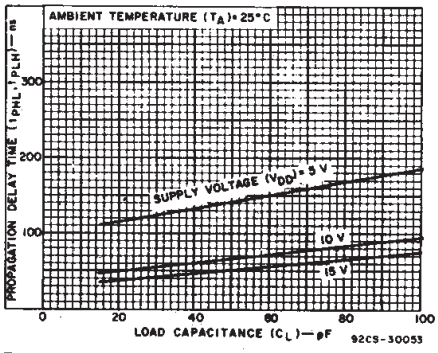

Fig. 7 – Typical propagation delay time as a function of load capacitance.

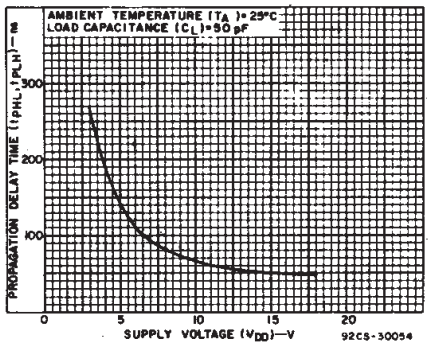

Fig. 8 – Typical propagation delay time as a function of supply voltage.

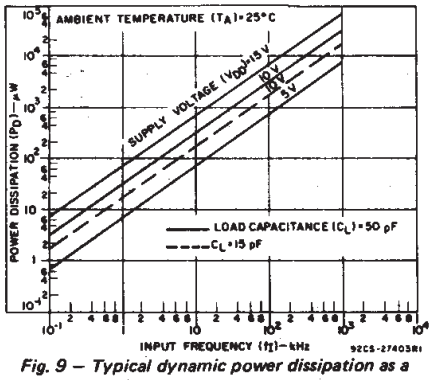

Fig. 9 – Typical dynamic power dissipation as a function of input frequency.

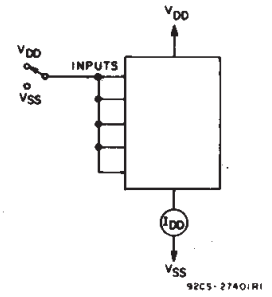

Fig. 10 – Quiescent-device current test circuit.

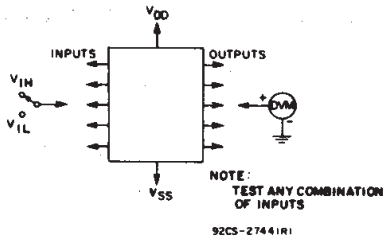

Fig. 11 – Input-voltage test circuit.

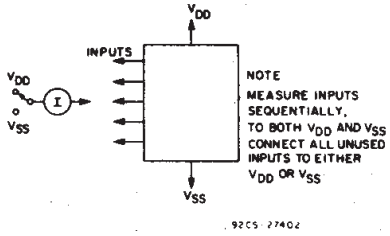

Fig. 12 – Input-current test circuit.

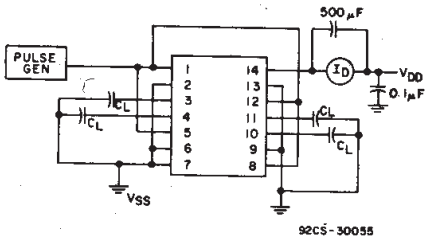

Fig. 13 – Dynamic power dissipation test circuit.

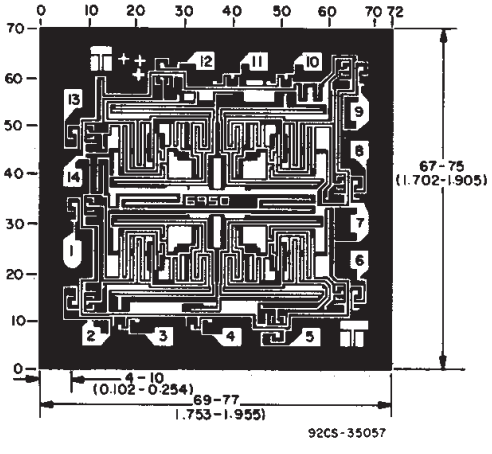

Dimensions and pad layout for CD4030BH.

Dimensions in parentheses are in millimeters and are derived from the basic inch dimensions as indicated. Grid graduations are in mils (10^{-3} inch).

PACKAGING INFORMATION

Orderable part number	Status (1)	Material type (2)	Package | Pins	Package qty | Carrier	RoHS (3)	Lead finish/ Ball material (4)	MSL rating/ Peak reflow (5)	Op temp (°C)	Part marking (6)
CD4030BE	Active	Production	PDIP (N) | 14	25 | TUBE	Yes	NIPDAU	N/A for Pkg Type	-55 to 125	CD4030BE
CD4030BE.A	Active	Production	PDIP (N) | 14	25 | TUBE	Yes	NIPDAU	N/A for Pkg Type	-55 to 125	CD4030BE
CD4030BEE4	Active	Production	PDIP (N) | 14	25 | TUBE	Yes	NIPDAU	N/A for Pkg Type	-55 to 125	CD4030BE
CD4030BF	Active	Production	CDIP (J) | 14	25 | TUBE	No	SNPB	N/A for Pkg Type	-55 to 125	CD4030BF
CD4030BF.A	Active	Production	CDIP (J) | 14	25 | TUBE	No	SNPB	N/A for Pkg Type	-55 to 125	CD4030BF
CD4030BF3A	Active	Production	CDIP (J) | 14	25 | TUBE	No	SNPB	N/A for Pkg Type	-55 to 125	CD4030BF3A
CD4030BF3A.A	Active	Production	CDIP (J) | 14	25 | TUBE	No	SNPB	N/A for Pkg Type	-55 to 125	CD4030BF3A
CD4030BM	Obsolete	Production	SOIC (D) | 14	-	-	Call TI	Call TI	-55 to 125	CD4030BM
CD4030BM96	Active	Production	SOIC (D) | 14	2500 | LARGE T&R	Yes	NIPDAU	Level-1-260C-UNLIM	-55 to 125	CD4030BM
CD4030BM96.A	Active	Production	SOIC (D) | 14	2500 | LARGE T&R	Yes	NIPDAU	Level-1-260C-UNLIM	-55 to 125	CD4030BM
CD4030BM96G4	Active	Production	SOIC (D) | 14	2500 | LARGE T&R	Yes	NIPDAU	Level-1-260C-UNLIM	-55 to 125	CD4030BM
CD4030BM96G4.A	Active	Production	SOIC (D) | 14	2500 | LARGE T&R	Yes	NIPDAU	Level-1-260C-UNLIM	-55 to 125	CD4030BM
CD4030BNSR	Active	Production	SOP (NS) | 14	2000 | LARGE T&R	Yes	NIPDAU	Level-1-260C-UNLIM	-55 to 125	CD4030B
CD4030BNSR.A	Active	Production	SOP (NS) | 14	2000 | LARGE T&R	Yes	NIPDAU	Level-1-260C-UNLIM	-55 to 125	CD4030B
CD4030BNSRG4	Active	Production	SOP (NS) | 14	2000 | LARGE T&R	Yes	NIPDAU	Level-1-260C-UNLIM	-55 to 125	CD4030B
CD4030BPW	Obsolete	Production	TSSOP (PW) | 14	-	-	Call TI	Call TI	-55 to 125	CM030B
CD4030BPWR	Active	Production	TSSOP (PW) | 14	2000 | LARGE T&R	Yes	NIPDAU	Level-1-260C-UNLIM	-55 to 125	CM030B
CD4030BPWR.A	Active	Production	TSSOP (PW) | 14	2000 | LARGE T&R	Yes	NIPDAU	Level-1-260C-UNLIM	-55 to 125	CM030B
JM38510/05353BCA	Active	Production	CDIP (J) | 14	25 | TUBE	No	SNPB	N/A for Pkg Type	-55 to 125	JM38510/ 05353BCA
JM38510/05353BCA.A	Active	Production	CDIP (J) | 14	25 | TUBE	No	SNPB	N/A for Pkg Type	-55 to 125	JM38510/ 05353BCA
M38510/05353BCA	Active	Production	CDIP (J) | 14	25 | TUBE	No	SNPB	N/A for Pkg Type	-55 to 125	JM38510/ 05353BCA

(1) **Status:** For more details on status, see our product life cycle.

(2) **Material type:** When designated, preproduction parts are prototypes/experimental devices, and are not yet approved or released for full production. Testing and final process, including without limitation quality assurance, reliability performance testing, and/or process qualification, may not yet be complete, and this item is subject to further changes or possible discontinuation. If available for ordering, purchases will be subject to an additional waiver at checkout, and are intended for early internal evaluation purposes only. These items are sold without warranties of any kind.

(3) **RoHS values:** Yes, No, RoHS Exempt. See the TI RoHS Statement for additional information and value definition.

(4) **Lead finish/Ball material:** Parts may have multiple material finish options. Finish options are separated by a vertical ruled line. Lead finish/Ball material values may wrap to two lines if the finish value exceeds the maximum column width.

(5) **MSL rating/Peak reflow:** The moisture sensitivity level ratings and peak solder (reflow) temperatures. In the event that a part has multiple moisture sensitivity ratings, only the lowest level per JEDEC standards is shown. Refer to the shipping label for the actual reflow temperature that will be used to mount the part to the printed circuit board.

(6) **Part marking:** There may be an additional marking, which relates to the logo, the lot trace code information, or the environmental category of the part.

Multiple part markings will be inside parentheses. Only one part marking contained in parentheses and separated by a "~" will appear on a part. If a line is indented then it is a continuation of the previous line and the two combined represent the entire part marking for that device.

Important Information and Disclaimer: The information provided on this page represents TI's knowledge and belief as of the date that it is provided. TI bases its knowledge and belief on information provided by third parties, and makes no representation or warranty as to the accuracy of such information. Efforts are underway to better integrate information from third parties. TI has taken and continues to take reasonable steps to provide representative and accurate information but may not have conducted destructive testing or chemical analysis on incoming materials and chemicals. TI and TI suppliers consider certain information to be proprietary, and thus CAS numbers and other limited information may not be available for release.

In no event shall TI's liability arising out of such information exceed the total purchase price of the TI part(s) at issue in this document sold by TI to Customer on an annual basis.

OTHER QUALIFIED VERSIONS OF CD4030B, CD4030B-MIL :

- Catalog : CD4030B
- Military : CD4030B-MIL

NOTE: Qualified Version Definitions:

- Catalog - TI's standard catalog product
- Military - QML certified for Military and Defense Applications

TAPE AND REEL INFORMATION

REEL DIMENSIONS

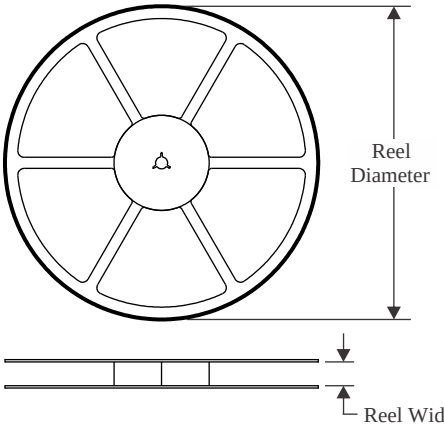

TAPE DIMENSIONS

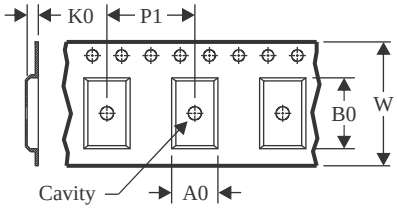

A0	Dimension designed to accommodate the component width
B0	Dimension designed to accommodate the component length
K0	Dimension designed to accommodate the component thickness
W	Overall width of the carrier tape
P1	Pitch between successive cavity centers

QUADRANT ASSIGNMENTS FOR PIN 1 ORIENTATION IN TAPE

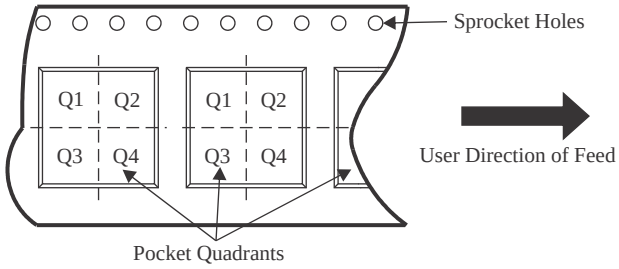

*All dimensions are nominal

Device	Package Type	Package Drawing	Pins	SPQ	Reel Diameter (mm)	Reel Width W1 (mm)	A0 (mm)	B0 (mm)	K0 (mm)	P1 (mm)	W (mm)	Pin1 Quadrant
CD4030BM96	SOIC	D	14	2500	330.0	16.4	6.5	9.0	2.1	8.0	16.0	Q1
CD4030BM96G4	SOIC	D	14	2500	330.0	16.4	6.5	9.0	2.1	8.0	16.0	Q1
CD4030BNSR	SOP	NS	14	2000	330.0	16.4	8.1	10.4	2.5	12.0	16.0	Q1
CD4030BPWR	TSSOP	PW	14	2000	330.0	12.4	6.9	5.6	1.6	8.0	12.0	Q1

TAPE AND REEL BOX DIMENSIONS

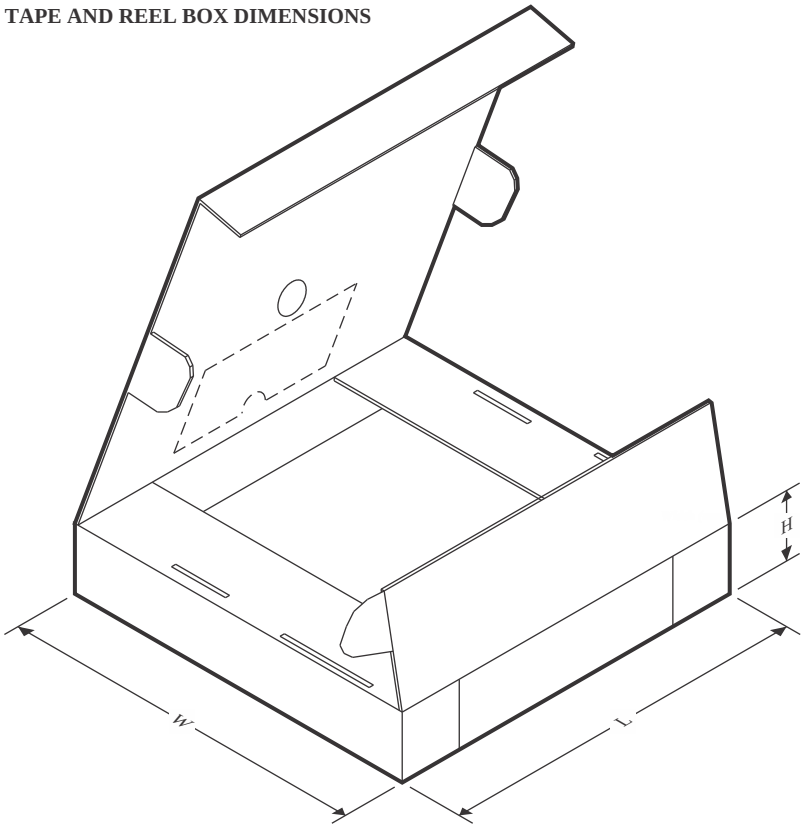

*All dimensions are nominal

Device	Package Type	Package Drawing	Pins	SPQ	Length (mm)	Width (mm)	Height (mm)
CD4030BM96	SOIC	D	14	2500	353.0	353.0	32.0
CD4030BM96G4	SOIC	D	14	2500	353.0	353.0	32.0
CD4030BNSR	SOP	NS	14	2000	353.0	353.0	32.0
CD4030BPWR	TSSOP	PW	14	2000	353.0	353.0	32.0

TUBE

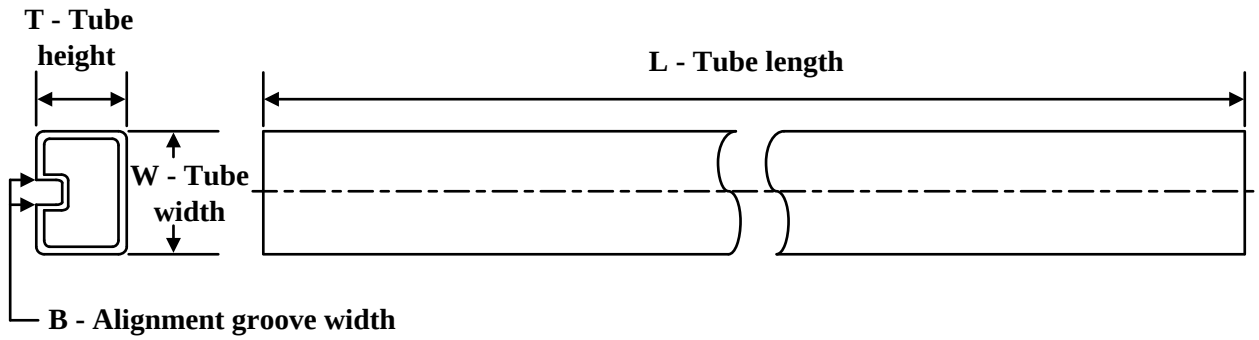

*All dimensions are nominal

Device	Package Name	Package Type	Pins	SPQ	L (mm)	W (mm)	T (µm)	B (mm)
CD4030BE	N	PDIP	14	25	506	13.97	11230	4.32
CD4030BE	N	PDIP	14	25	506	13.97	11230	4.32
CD4030BE.A	N	PDIP	14	25	506	13.97	11230	4.32
CD4030BE.A	N	PDIP	14	25	506	13.97	11230	4.32
CD4030BEE4	N	PDIP	14	25	506	13.97	11230	4.32
CD4030BEE4	N	PDIP	14	25	506	13.97	11230	4.32

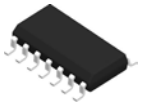

PACKAGE OUTLINE

D0014A

SOIC - 1.75 mm max height

SMALL OUTLINE INTEGRATED CIRCUIT

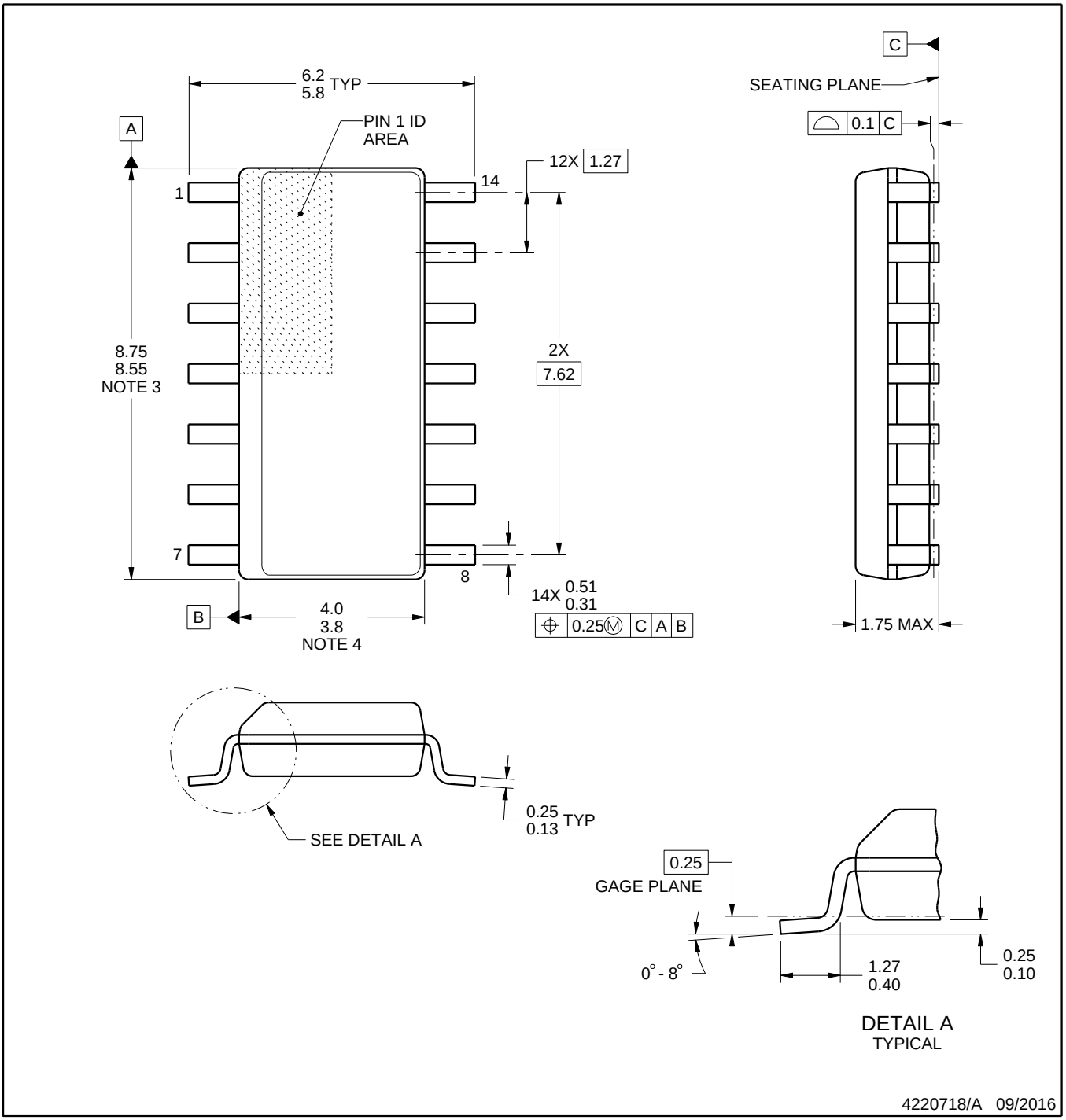

NOTES:

1. All linear dimensions are in millimeters. Dimensions in parenthesis are for reference only. Dimensioning and tolerancing per ASME Y14.5M.
2. This drawing is subject to change without notice.
3. This dimension does not include mold flash, protrusions, or gate burrs. Mold flash, protrusions, or gate burrs shall not exceed 0.15 mm, per side.
4. This dimension does not include interlead flash. Interlead flash shall not exceed 0.43 mm, per side.
5. Reference JEDEC registration MS-012, variation AB.

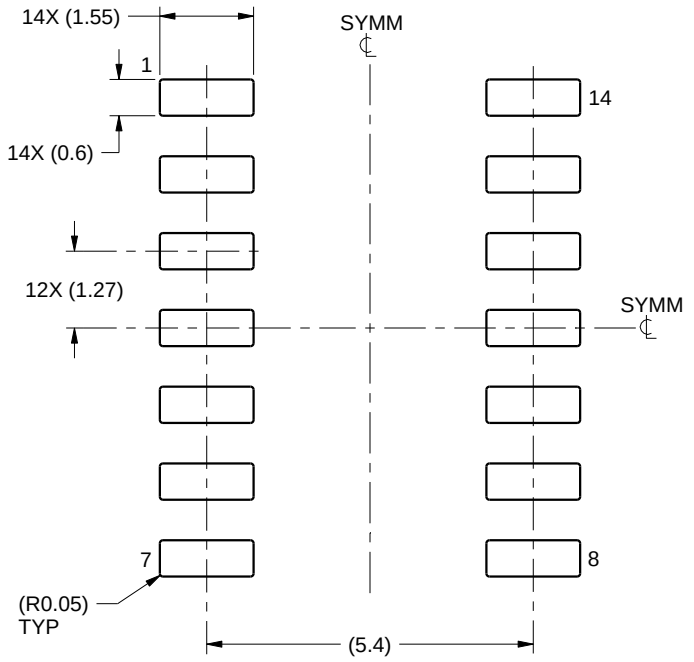

LAND PATTERN EXAMPLE
SCALE:8X

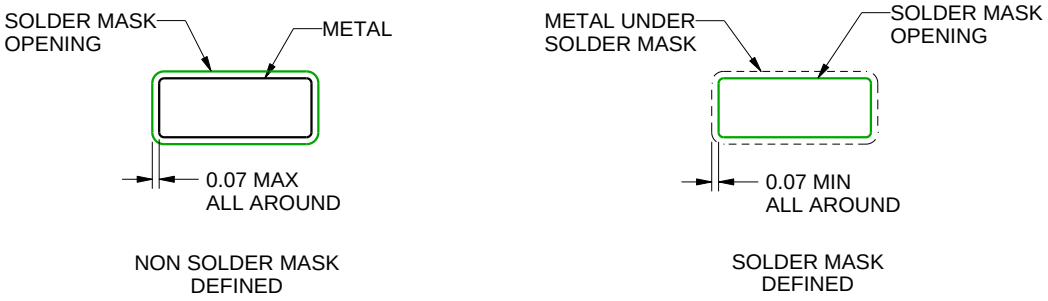

SOLDER MASK DETAILS

4220718/A 09/2016

NOTES: (continued)

6. Publication IPC-7351 may have alternate designs.
7. Solder mask tolerances between and around signal pads can vary based on board fabrication site.

EXAMPLE STENCIL DESIGN

D0014A

SOIC - 1.75 mm max height

SMALL OUTLINE INTEGRATED CIRCUIT

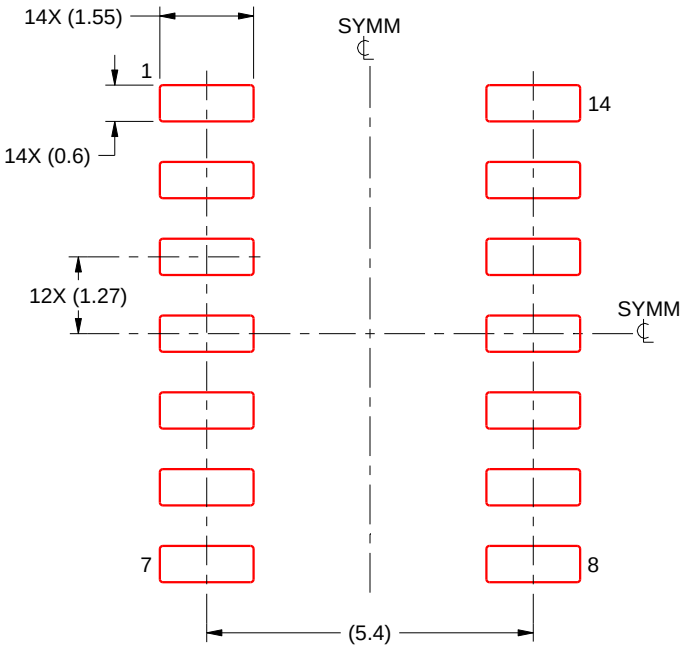

SOLDER PASTE EXAMPLE
BASED ON 0.125 mm THICK STENCIL
SCALE:8X

4220718/A 09/2016

NOTES: (continued)

8. Laser cutting apertures with trapezoidal walls and rounded corners may offer better paste release. IPC-7525 may have alternate design recommendations.
9. Board assembly site may have different recommendations for stencil design.

MECHANICAL DATA

NS (R-PDSO-G)** **PLASTIC SMALL-OUTLINE PACKAGE**

14-PINS SHOWN

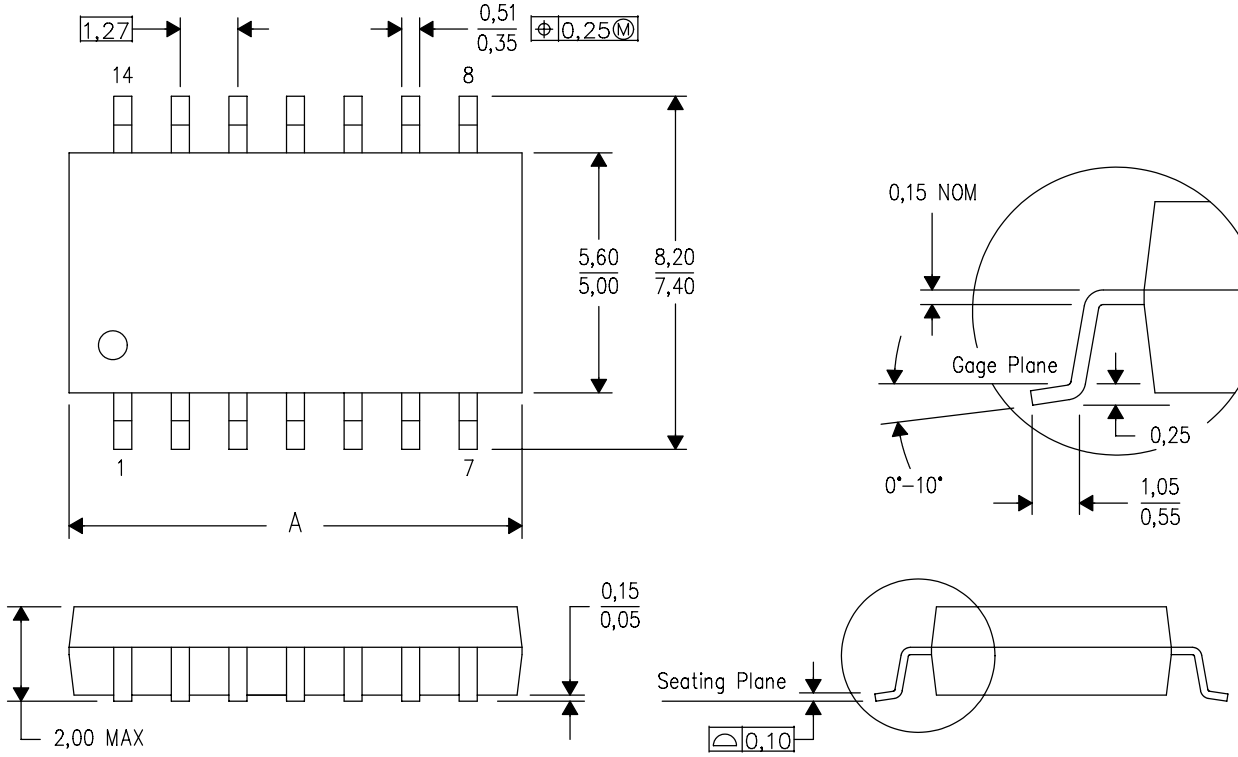

DIM \ PINS **	14	16	20	24
A MAX	10,50	10,50	12,90	15,30
A MIN	9,90	9,90	12,30	14,70

4040062/C 03/03

NOTES:
A. All linear dimensions are in millimeters.
B. This drawing is subject to change without notice.
C. Body dimensions do not include mold flash or protrusion, not to exceed 0,15.

GENERIC PACKAGE VIEW

J 14 CDIP - 5.08 mm max height

CERAMIC DUAL IN LINE PACKAGE

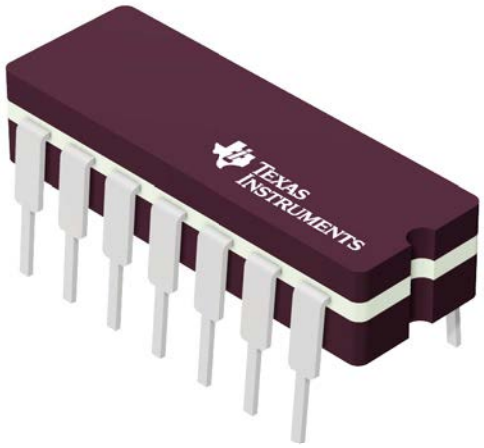

Images above are just a representation of the package family, actual package may vary.
Refer to the product data sheet for package details.

4040083-5/G



PACKAGE OUTLINE

J0014A

CDIP - 5.08 mm max height

CERAMIC DUAL IN LINE PACKAGE

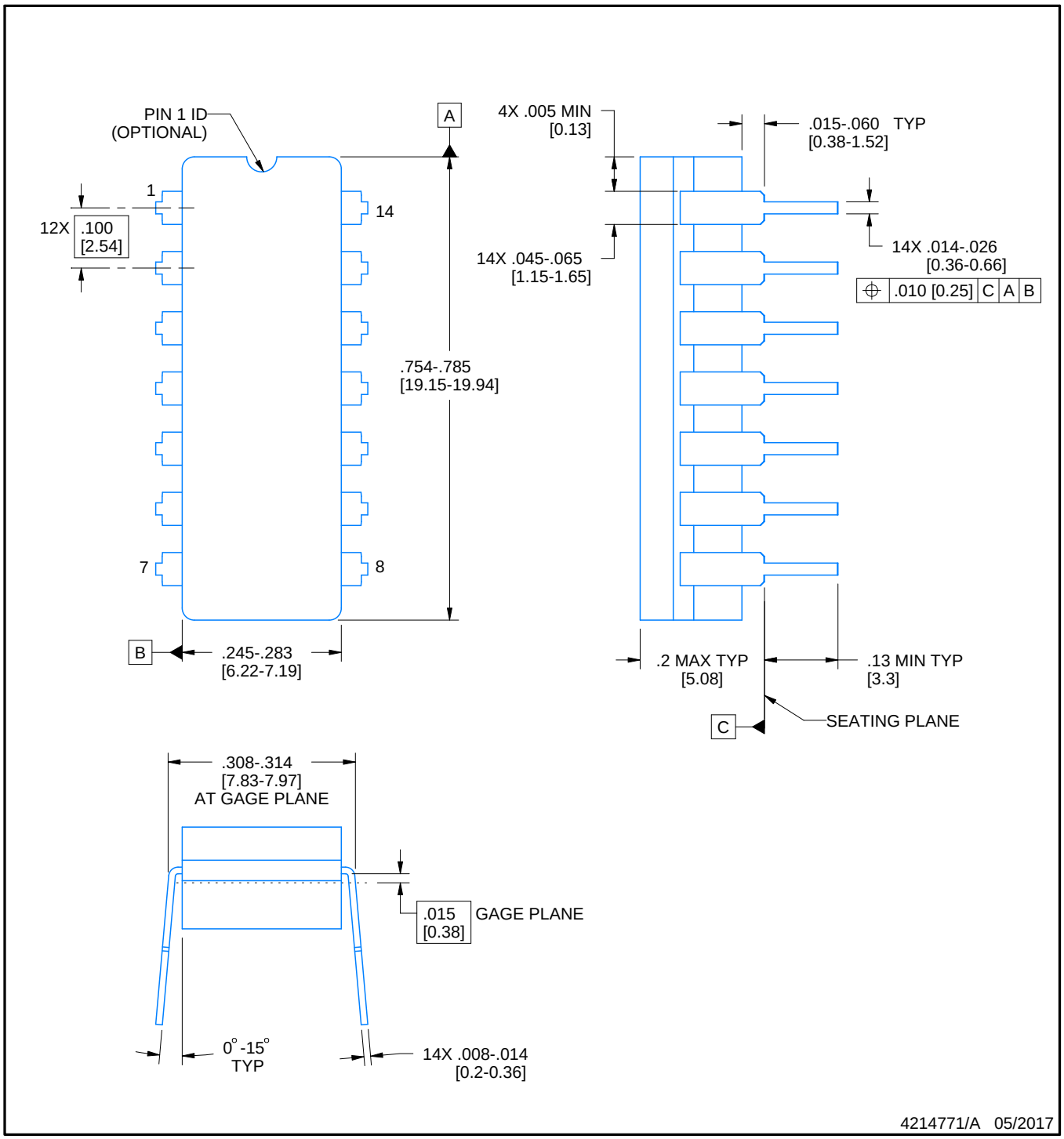

NOTES:

1. All controlling linear dimensions are in inches. Dimensions in brackets are in millimeters. Any dimension in brackets or parenthesis are for reference only. Dimensioning and tolerancing per ASME Y14.5M.
2. This drawing is subject to change without notice.
3. This package is hermitically sealed with a ceramic lid using glass frit.
4. Index point is provided on cap for terminal identification only and on press ceramic glass frit seal only.
5. Falls within MIL-STD-1835 and GDIP1-T14.

EXAMPLE BOARD LAYOUT

J0014A

CDIP - 5.08 mm max height

CERAMIC DUAL IN LINE PACKAGE

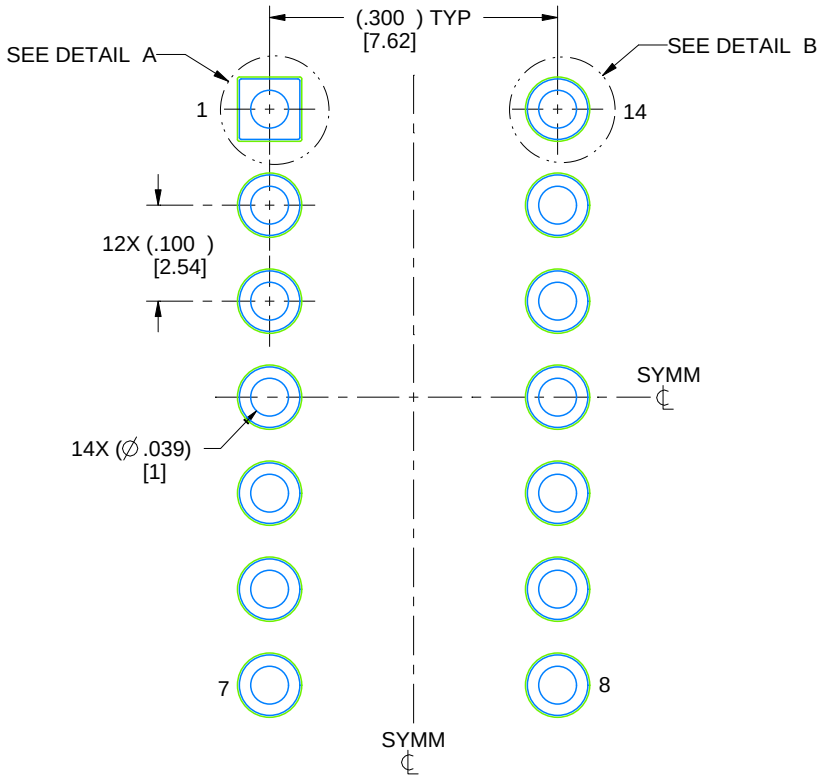

LAND PATTERN EXAMPLE
NON-SOLDER MASK DEFINED
SCALE: 5X

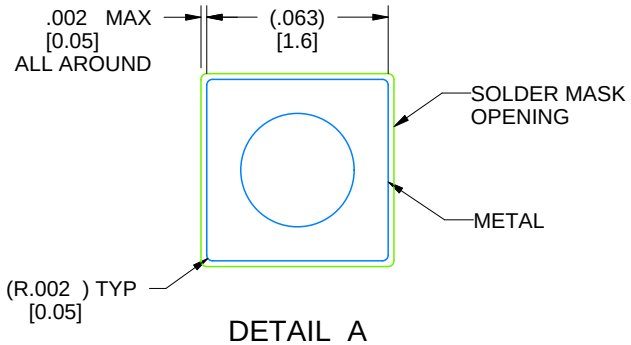

DETAIL A
SCALE: 15X

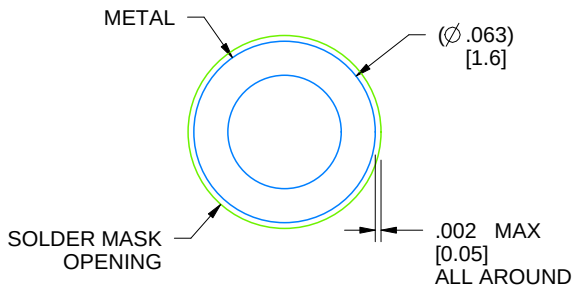

DETAIL B
13X, SCALE: 15X

4214771/A 05/2017

N (R–PDIP–T**)

PLASTIC DUAL–IN–LINE PACKAGE

16 PINS SHOWN

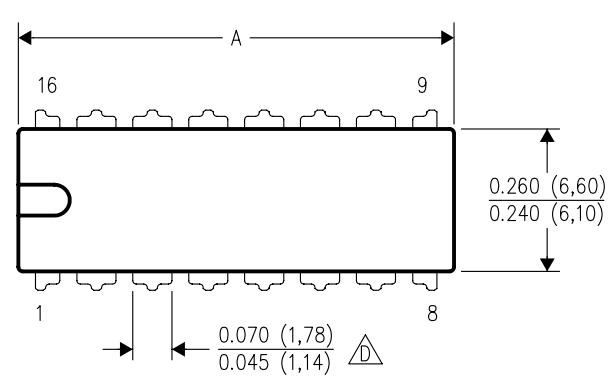

DIM \ PINS **	14	16	18	20
A MAX	0.775 (19,69)	0.775 (19,69)	0.920 (23,37)	1.060 (26,92)
A MIN	0.745 (18,92)	0.745 (18,92)	0.850 (21,59)	0.940 (23,88)
MS–001 VARIATION (C)	AA	BB	AC	AD

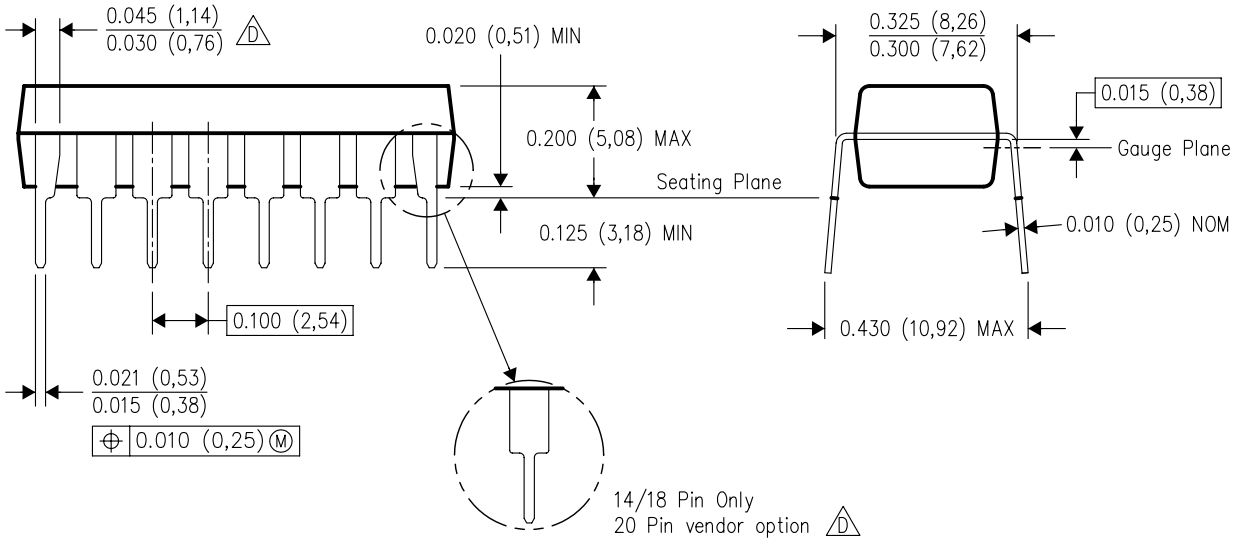

4040049/E 12/2002

NOTES:
A. All linear dimensions are in inches (millimeters).
B. This drawing is subject to change without notice.
C. Falls within JEDEC MS–001, except 18 and 20 pin minimum body length (Dim A).
D. The 20 pin end lead shoulder width is a vendor option, either half or full width.

PACKAGE OUTLINE

PW0014A

TSSOP - 1.2 mm max height

SMALL OUTLINE PACKAGE

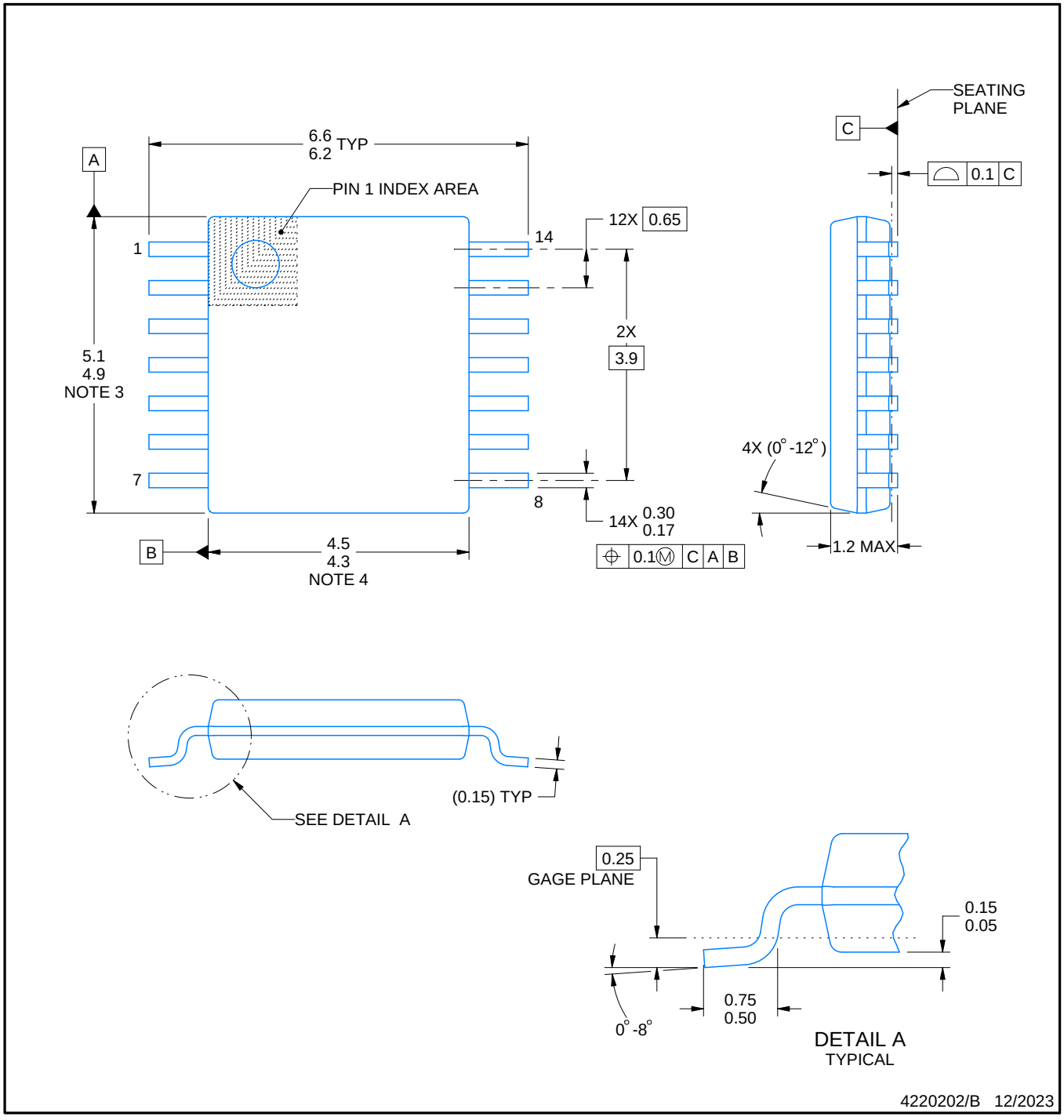

NOTES:

1. All linear dimensions are in millimeters. Any dimensions in parenthesis are for reference only. Dimensioning and tolerancing per ASME Y14.5M.
2. This drawing is subject to change without notice.
3. This dimension does not include mold flash, protrusions, or gate burrs. Mold flash, protrusions, or gate burrs shall not exceed 0.15 mm per side.
4. This dimension does not include interlead flash. Interlead flash shall not exceed 0.25 mm per side.
5. Reference JEDEC registration MO-153.

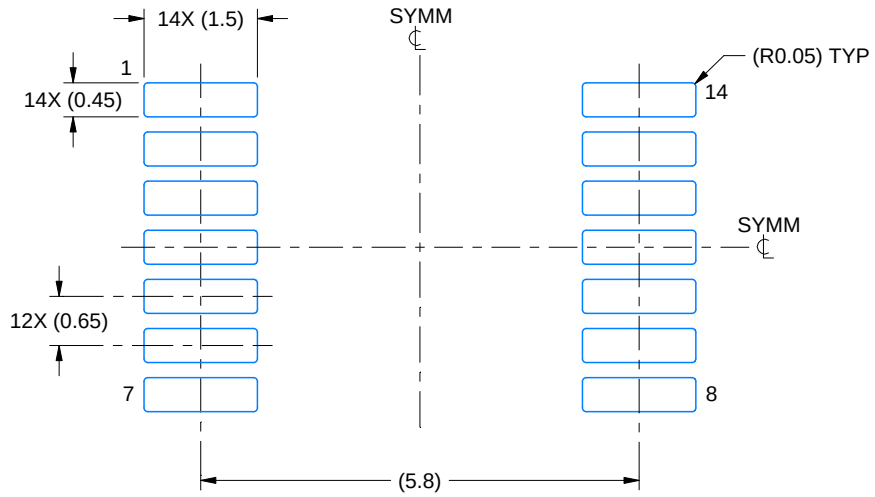

LAND PATTERN EXAMPLE
EXPOSED METAL SHOWN
SCALE: 10X

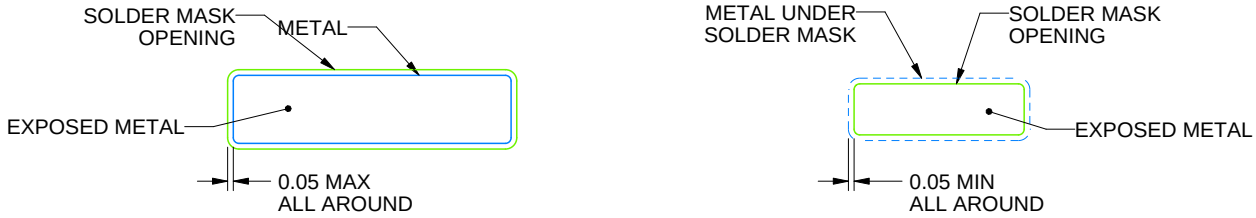

SOLDER MASK DETAILS

4220202/B 12/2023

NOTES: (continued)

6. Publication IPC-7351 may have alternate designs.
7. Solder mask tolerances between and around signal pads can vary based on board fabrication site.

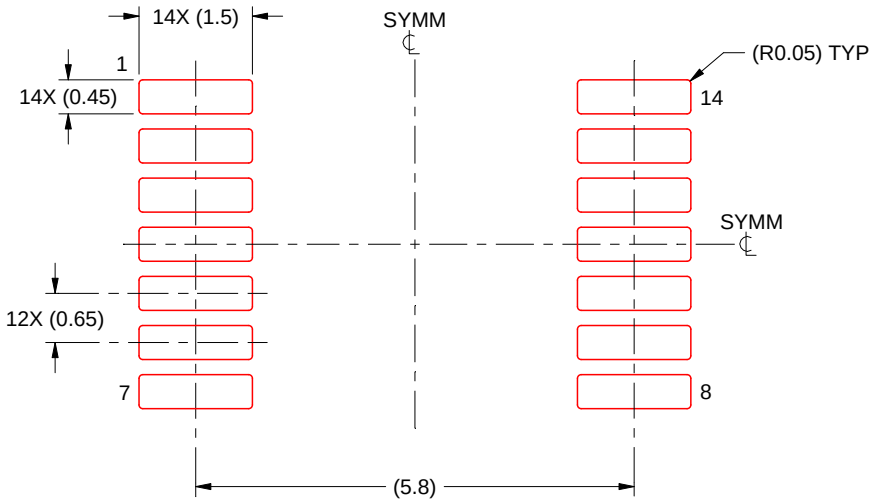

SOLDER PASTE EXAMPLE
BASED ON 0.125 mm THICK STENCIL
SCALE: 10X

4220202/B 12/2023

NOTES: (continued)

8. Laser cutting apertures with trapezoidal walls and rounded corners may offer better paste release. IPC-7525 may have alternate design recommendations.
9. Board assembly site may have different recommendations for stencil design.

IMPORTANT NOTICE AND DISCLAIMER

TI PROVIDES TECHNICAL AND RELIABILITY DATA (INCLUDING DATASHEETS), DESIGN RESOURCES (INCLUDING REFERENCE DESIGNS), APPLICATION OR OTHER DESIGN ADVICE, WEB TOOLS, SAFETY INFORMATION, AND OTHER RESOURCES “AS IS” AND WITH ALL FAULTS, AND DISCLAIMS ALL WARRANTIES, EXPRESS AND IMPLIED, INCLUDING WITHOUT LIMITATION ANY IMPLIED WARRANTIES OF MERCHANTABILITY, FITNESS FOR A PARTICULAR PURPOSE OR NON-INFRINGEMENT OF THIRD PARTY INTELLECTUAL PROPERTY RIGHTS.

These resources are intended for skilled developers designing with TI products. You are solely responsible for (1) selecting the appropriate TI products for your application, (2) designing, validating and testing your application, and (3) ensuring your application meets applicable standards, and any other safety, security, regulatory or other requirements.

These resources are subject to change without notice. TI grants you permission to use these resources only for development of an application that uses the TI products described in the resource. Other reproduction and display of these resources is prohibited. No license is granted to any other TI intellectual property right or to any third party intellectual property right. TI disclaims responsibility for, and you fully indemnify TI and its representatives against any claims, damages, costs, losses, and liabilities arising out of your use of these resources.

TI’s products are provided subject to TI’s Terms of Sale, TI’s General Quality Guidelines, or other applicable terms available either on ti.com or provided in conjunction with such TI products. TI’s provision of these resources does not expand or otherwise alter TI’s applicable warranties or warranty disclaimers for TI products. Unless TI explicitly designates a product as custom or customer-specified, TI products are standard, catalog, general purpose devices.

TI objects to and rejects any additional or different terms you may propose.

Copyright © 2026, Texas Instruments Incorporated

Last updated 10/2025