COMPACT™, TYPE 4X



INDUSTRY STANDARDS

UL 508A Listed; Type 4, 4X, 12, 13; File No. E61997

NEMA/EEMAC Type 4, 4X, 12, 13
CSA File No. 42186: Type 4, 4X, 12, 13
IEC 60529, IP66

APPLICATION

For use in indoor or outdoor applications, these stylized enclosures protect components and controls in corrosive environments.

SPECIFICATIONS

- Cast aluminum; no welded seams or sharp corners
- Stainless steel captivated cover screws placed outside sealed area
- Two to four grounding screws located on enclosure back wall
- Oil-resistant O-ring gasket
- Tongue-and-groove sealing construction
- Threaded internal bosses provided for mounting optional panels, rails and other components
- Mounting holes provided in corners outside of gasketed area

FINISH

RAL 7042 gray finish inside and out.

ACCESSORIES

DIN Type Rails
Hinge Kit
Mounting Bracket Kits
DIN Type Rails

BULLETIN: CA1

Standard Product

Catalog Number	AxBxC mm/in.	External Dimensions L x W mm/in.	Conductive Panel	Panel Size D x E mm/in.	Mounting G x H mm/in.	F mm/in.	J mm/in.	K mm/in.	M mm/in.	N mm/in.	T mm/in.
CCA886	67 x 72 x 47 2.64 x 2.83 x 1.85	75 x 80 2.95 x 3.15	CCAP88	64 x 69 2.52 x 2.72	52 x 63 2.05 x 2.48	41 1.61	41 1.61	13 0.51	30 1.18	48 1.89	4 0.16
CCA1286	116 x 71 x 51 4.57 x 2.80 x 2.01	125 x 80 4.92 x 3.15	CCAP128	114 x 69 4.49 x 2.72	52 x 113 2.05 x 4.45	45 1.77	42 1.65	15 0.59	30 1.18	48 1.89	4 0.16
CCA1886	167 x 72 x 47 6.57 x 2.83 x 1.85	175 x 80 6.89 x 3.15	CCAP188	164 x 69 6.46 x 2.72	52 x 163 2.05 x 6.42	41 1.61	41 1.61	13 0.51	30 1.18	48 1.89	4 0.16
CCA12128	122 x 122 x 80 4.80 x 4.80 x 3.10	122 x 122 4.80 x 4.80	CCAP1212	109 x 108 4.29 x 4.26	82 x 106 3.23 x 4.17	63 2.48	60 2.36	20 0.79	52 2.05	— —	4 0.16
CCA22128	220 x 120 x 80 8.70 x 4.70 x 3.10	220 x 122 8.66 x 4.80	CCAP2212	204 x 108 8.04 x 4.26	82 x 204 3.23 x 8.03	63 2.48	60 2.36	20 0.79	52 2.05	— —	4 0.16
CCA16169	160 x 160 x 90 6.30 x 6.30 x 3.50	160 x 160 6.30 x 6.30	CCAP1616	146 x 146 5.75 x 5.75	110 x 140 4.33 x 5.51	73 2.87	70 2.76	20 0.79	76 2.99	— —	4 0.16
CCA26169	260 x 160 x 90 10.20 x 6.30 x 3.50	260 x 160 10.23 x 6.30	CCAP2616	246 x 146 9.69 x 5.75	110 x 240 4.33 x 9.45	73 2.87	70 2.76	20 0.79	76 2.99	— —	4 0.16
CCA36169	360 x 160 x 90 14.20 x 6.30 x 3.50	360 x 160 14.17 x 6.30	CCAP3616	346 x 146 13.63 x 5.75	110 x 340 4.33 x 13.39	73 2.87	70 2.76	20 0.79	76 2.99	— —	4 0.16
CCA202311	200 x 230 x 110 7.90 x 9.10 x 4.30	200 x 230 7.87 x 9.06	CCAP2023	185 x 215 7.29 x 8.47	180 x 180 7.09 x 7.09	93 3.66	90 3.54	20 0.79	80 3.15	144 5.67	4 0.16
CCA332311	330 x 230 x 110 13.00 x 9.10 x 4.30	330 x 230 12.99 x 9.06	CCAP3323	315 x 215 12.41 x 8.47	180 x 310 7.09 x 12.21	93 3.66	90 3.54	20 0.79	80 3.15	144 5.67	4 0.16
CCA332318	330 x 230 x 180 13.00 x 9.10 x 7.10	330 x 230 12.99 x 9.06	CCAP3323	315 x 215 12.41 x 8.47	180 x 310 7.09 x 12.21	162 6.38	160 6.30	20 0.79	100 3.94	144 5.67	4 0.16

A x B x C are internal dimensions.

Purchase panels separately.

CCA886, CCA1286 and CCA1886 enclosures have only two mounting holes.

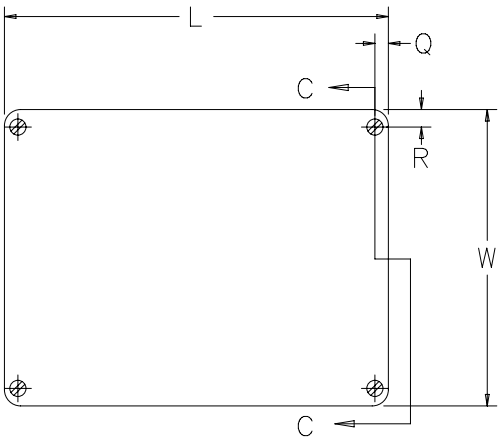

TOP VIEW

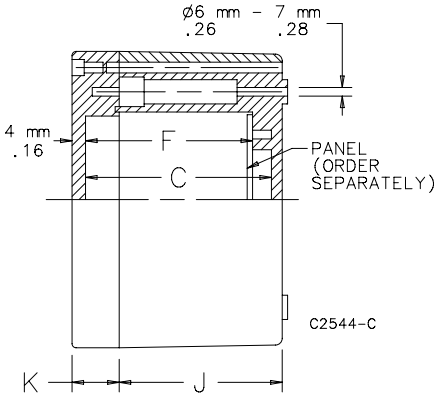

SECTION C-C

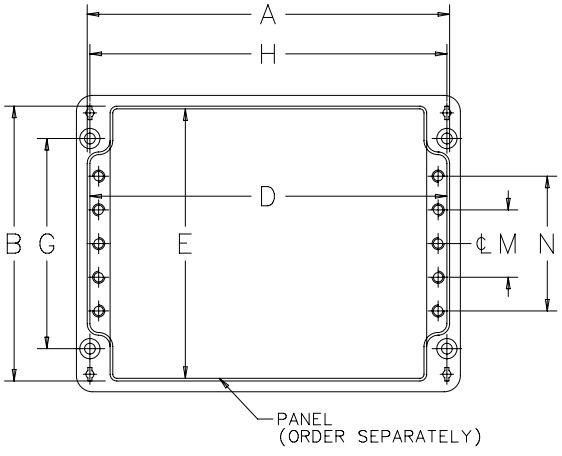

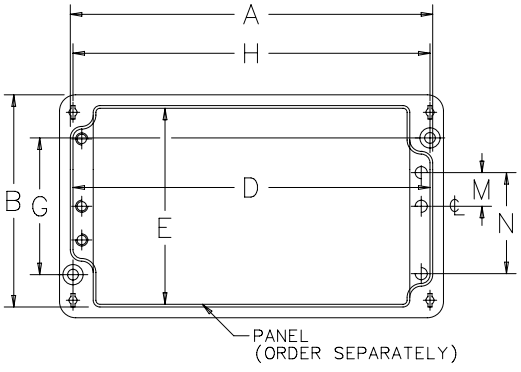

(CCA86, CCA1286, CCA1886 ONLY)

TOP VIEW WITH COVER REMOVED

HINGE KIT



Made of die-cast aluminum. Angle rotation approximately 170 degrees. Mounting template and stainless steel hardware included. Two hinges per kit.
Hinge kit not available for CCA886, CCA1286 or CCA1886.

BULLETIN: CC1

Catalog Number	Product Weight (lb.)
CCAHK	0.1

MOUNTING BRACKET KITS



Mounting brackets are made of non-corrosive 12 gauge steel alloy. Two or four brackets per kit. Stainless steel mounting screws and installation instructions are included.

BULLETIN: CA1

Catalog Number	Description	Fits
CCAMF12	Two brackets	Enclosures CCA12128 and CCA22128
CCAMF16	Two brackets	Enclosures CCA16169 and CCA36169
CCAMF31	Four brackets	Enclosures CCA202311, CCA332311 and CCA332318

PANELS



Made of plated steel. Permits electro-mechanical components to be mounted inside the enclosure.

BULLETIN: CA1P

Catalog Number	Panel Size D x E (mm)	Panel Size D x E (in.)
CCAP88	64 x 69	2.52 x 2.72
CCAP128	114 x 69	4.49 x 2.72
CCAP188	164 x 69	6.46 x 2.72
CCAP1212	109 x 108	4.29 x 4.26
CCAP2212	204 x 108	8.04 x 4.26
CCAP1616	146 x 146	5.75 x 5.75
CCAP2616	246 x 146	9.69 x 5.75
CCAP3616	346 x 146	13.63 x 5.75
CCAP2023	185 x 215	7.29 x 8.47
CCAP3323	315 x 215	12.41 x 8.47
CCAP4031	387 x 294	15.25 x 11.58
CCAP6031	585 x 294	23.05 x 11.58

DIN TYPE RAILS



DIN Type Rails receive terminal blocks, relays, switches, filters, timers and various other electrical and electronic components. Lengths fit size of enclosure. All DIN rails made of plated steel.

BULLETIN: CA1

Catalog Number	Description	Fits
CCADR8S1	Plated DIN rail Type TS-15	A = 67mm
CCADR12S1	Plated DIN rail Type TS-15	A = 116mm
CCADR18S1	Plated DIN rail Type TS-15	A = 167mm
CCADR12S2	Plated DIN rail Type TS-35	A = 116mm
CCADR22S2	Plated DIN rail Type TS-35	A = 210mm
CCADR16S2	Plated DIN rail Type TS-35	A = 149mm
CCADR26S2	Plated DIN rail Type TS-35	A = 249mm
CCADR36S2	Plated DIN rail Type TS-35	A = 349mm
CCADR20S2	Plated DIN rail Type TS-35	A = 189mm
CCADR33S2	Plated DIN rail Type TS-35	A = 313mm

ALUMINUM TYPE 4X ACCESSORY SELECTION MATRIX

Catalog Number	CCA886	CCA1286	CCA1886	CCA12128	CCA22128	CCA16169	CCA26169	CCA36169	CCA202311	CCA332311	CCA332318
Hinge Kit											
CCAHK				•	•	•	•	•	•	•	•
Mounting Bracket Kit											
CCAMF12				•	•						
CCAMF16						•		•			
CCAMF31									•	•	•
Panels											
CCAP88	•										
CCAP128		•									
CCAP188			•								
CCAP1212				•							
CCAP2212					•						
CCAO1616						•					
CCAP2616							•				
CCAP3616								•			
CCAP2023									•		
CCAP3323										•	•
DIN Type Rails											
CCADR8S1	•										
CCADR12S1		•									
CCADR18S1			•								
CCADR12S2				•							
CCADR22S2					•						
CCADR16S2						•					
CCADR26S2							•				
CCADR36S2								•			
CCADR20S2									•		
CCADR33S2										•	•