Aluminium enclosures
CA series

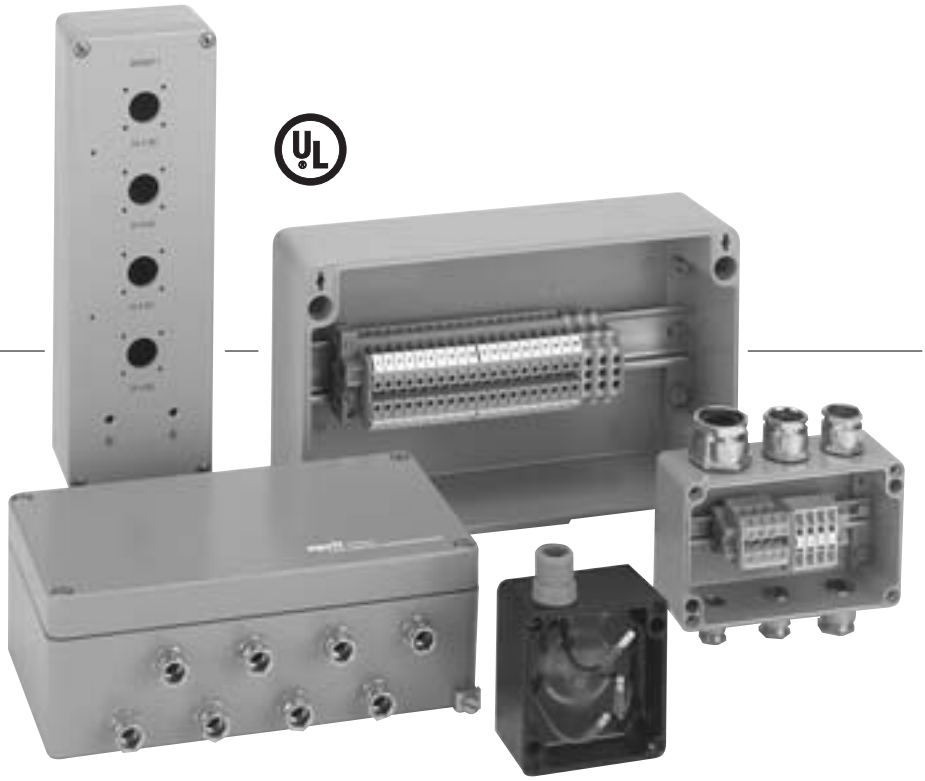

BERNSTEIN aluminium enclosures are ideally suited to housing electrical, electronic or pneumatic components. Their high mechanical strength ensures excellent protection against impact and all sizes are sealed to IP 65, according to IEC 529.

BERNSTEIN aluminium enclosures are fitted with copper earthing screws (M4 or M6) in both the base and lid, the surface below the screws is unpainted allowing a good earth connection to be made. The captive lid screws are made of stainless steel and are held in place by a lock integrated in the lid. A gasket (for standard enclosures) is factory-fitted, and ensures conformance with the protection class. BERNSTEIN aluminium enclosures are surface-coated in RAL 7001 (silver-grey), as standard.

BERNSTEIN aluminium enclosures are either die-cast or chill-cast. The dimension table shows the production method used for each respective enclosure.

Attachment points inside the enclosure can be used to hold equipment in place (mounting rail, mounting plate, printed circuit board etc.). Alternatively, the earthing points may be used. These inner attachment points are situated at different heights and positions. (Refer to the illustrations for detailed positions.)

Technical data

Material
Die-cast aluminium or AlSi 12 (Cu) chill-cast

Gasket
Neoprene round seal (siliconised)
alternative:
Neoprene round seal
(silicone-free)
Silicone round seal

Lid screws
Stainless steel, captive, multi-purpose cross head
alternative:
– Stainless steel quarter turn quick release (die-cast types only)
– Stainless steel hexagonal socket head screws
– Lead-sealed steel lid screws (9 S 20 K), slotted head

Coating
RAL 7001 (silver-grey)
alternative:
– Special RAL colours
– Special coatings

Temperature range
-40 °C to +80 °C (neoprene gasket)
alternative:
-50 °C to +130 °C (silicone gasket)
or -30 °C to +100 °C
(explosion-hazardous area)

Protection class
IP 65
alternative:
higher protection class by request

Approval
German Lloyd: No. 91 187 - 84HH

UL: File E 168772 (N)

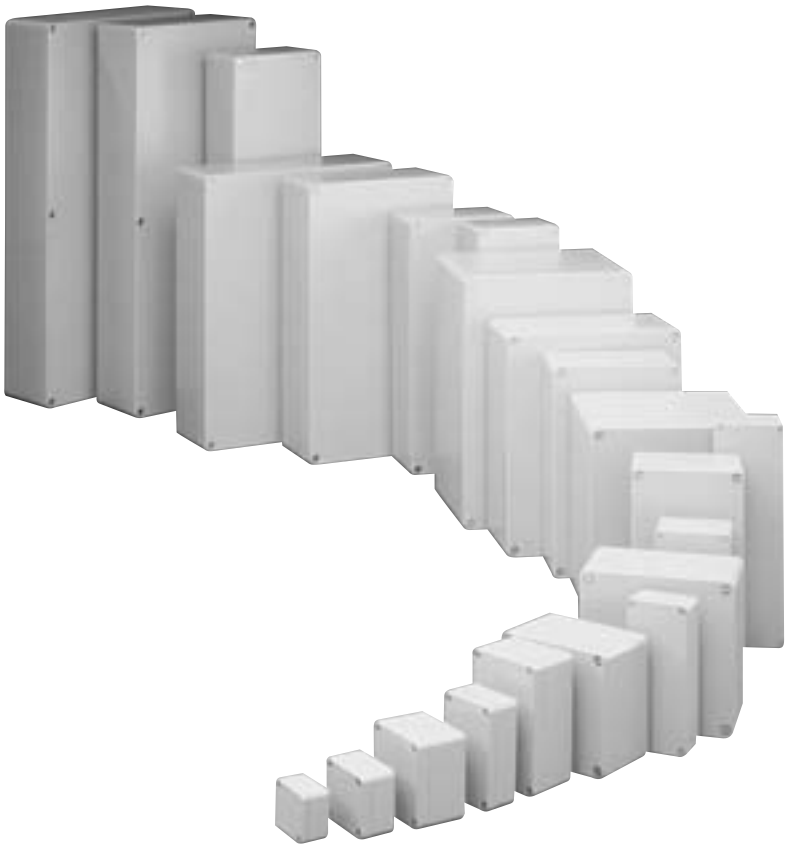

Accessories for aluminium enclosures

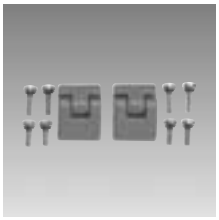

External hinges
For hinged attachment of the enclosure lid. Swivelling angle of lid approx. 155°. Aluminium casting, RAL 7001 coating. Machining required to fit.
Drill template is supplied.



Mounting plates
Galvanised sheet steel (thickness: CA-060 to CA-310, CA-350 to CA-400: 1.5 mm; CA-330, CA-420 to CA-480: 2.5 mm) allows mounting of additional equipment.

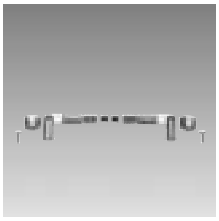

Internal hinges
For hinged attachment of the enclosure lid. Swivelling angle of lid approx. 95°. Made of stainless steel. Machining required to fit.



Silicone lid gasket
Improved temperature range (-50 °C to +130 °C). Standard type made of silicone foam.

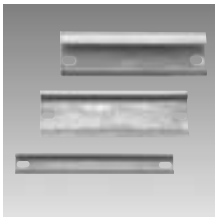

Mounting rails
Standard rails TS-15, TS-32 or TS-35 (steel), yellow-passivated for attachment of terminal blocks.



Earthing rails
Galvanised steel for connecting and routing of protective earth connection.

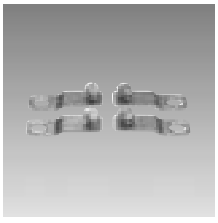

External attachment brackets
Stainless steel for mounting enclosures without opening the lid.
Can be mounted in 90° steps at the base of the enclosure.

Aluminium enclosures – product line

Dimensions/mm L x **W** x H	Aluminium enclosures Part number	Type	Cast type dc = die casting cc = chilled casting
50 x **45** x 30	102.0.0000.00	CA-020	dc
58 x **64** x 36	106.0.0000.00	CA-060	dc
98 x **64** x 36	108.0.0000.00	CA-080	dc
150 x **64** x 36	110.0.0000.00	CA-100	dc
75 x **80** x 57	113.0.0000.00	CA-130	dc
75 x **80** x 57	114.0.0000.00	CA-140	dc
125 x **80** x 57	115.0.0000.00	CA-150	dc
125 x **80** x 57	116.0.0000.00	CA-160	dc
175 x **80** x 57	117.0.0000.00	CA-170	dc
175 x **80** x 57	118.0.0000.00	CA-180	dc
250 x **80** x 57	119.0.0000.00	CA-190	dc
122 x **122** x 80	121.0.0000.00	CA-210	dc
122 x **122** x 90	121.0.0000.50	CA-215	dc
122 x **122** x 80	122.0.0000.00	CA-220	dc
220 x **122** x 80	123.0.0000.00	CA-230	dc
220 x **122** x 90	123.0.0000.50	CA-235	dc
220 x **122** x 80	124.0.0000.00	CA-240	dc
360 x **122** x 80	125.0.0000.00	CA-250	dc
160 x **160** x 90	127.0.0000.00	CA-270	dc
160 x **160** x 90	128.0.0000.00	CA-280	dc
260 x **160** x 90	129.0.0000.00	CA-290	dc
260 x **160** x 90	130.0.0000.00	CA-300	dc
360 x **160** x 90	131.0.0000.00	CA-310	dc
560 x **160** x 90	133.0.0000.00	CA-330	cc
200 x **230** x 110	135.0.0000.00	CA-350	dc
200 x **230** x 180	136.0.0000.00	CA-360	cc
280 x **230** x 110	137.0.0000.00	CA-370	dc
330 x **230** x 110	138.0.0000.00	CA-380	dc
330 x **230** x 180	139.0.0000.00	CA-390	cc
401 x **230** x 110	140.0.0000.00	CA-400	dc
600 x **230** x 110	142.0.0000.00	CA-420	cc
402 x **310** x 110	145.0.0000.00	CA-450	dc
402 x **310** x 180	146.0.0000.00	CA-460	cc
600 x **310** x 110	147.0.0000.00	CA-470	cc
600 x **310** x 180	148.0.0000.00	CA-480	cc

Component overview for aluminium enclosures CA series

*) Assembled on 2 mounting rails
**) Assembled on 3 mounting rails
The number of terminals is reduced when partitions are used.

Model		Weidmüller				Phoenix			Wieland				Entrelec							Phoenix						
		Block terminal				Block terminal			Block terminal				Terminal block							Terminal block						
Terminal width (mm):													5.2	6.2	5.2	6.2	8.2	10.2	12.2	5.2	6.2	7.5	5.2	6.2	8.2	10.2
Single core	mm²	4	4	4	2.5	4	4	4	2.5	2.5	2.5	2.5	2.5	4	4	4	10	16	25	2.5	4	10	4	4	10	16
Stranded	mm²	4	4	4	2.5	4	4	4	2.5	2.5	2.5	2.5	1.5	4	2.5	4	6	10	16	1.5	4	6	2.5	4	6	10
Nominal voltage	V	380	380	380	380	500	500	500	500	500	500	500	250	380	750	750	750	750	750	500	500	500	750	750	750	750
Loading capacityt	A	36	36	36	25	36	36	36	25	25	25	25	20	35	26	35	46	63	85	27	36	65	36	36	65	87
Terminal bridging		–	–	–	–	–	–	–	–	–	–	–	–	○	○	○	○	○	○	–	○	–	○	○	○	○
Mounting rail	TS 15	–	–	–	–	–	–	–	–	–	–	–	○	○	–	○	–	–	–	○	○	○	–	–	–	–
	TS 32	○	–	–	–	–	–	–	–	–	–	–	–	–	○	○	○	○	○	–	–	–	○	○	○	○
	TS 35	○	–	–	–	–	–	–	–	–	–	–	–	–	○	○	○	○	○	–	–	–	○	○	○	○
Part number		**9.40.1.0100.00**	**9.40.1.0090.00**	**9.40.1.0130.00**	**9.40.1.0010.00**	**9.40.1.0020.00**	**9.40.1.0030.00**	**9.40.1.0040.00**	**9.40.1.0050.00**	**9.40.1.0060.00**	**9.40.1.0070.00**	**9.40.1.0080.00**	**9.40.2.1270.00**	**9.40.2.0940.00**	**9.40.2.1090.00**	**9.40.2.1030.00**	**9.40.2.1040.00**	**9.40.2.1050.00**	**9.40.2.1060.00**	**9.40.2.0010.00**	**9.40.2.0020.00**	**9.40.2.0030.00**	**9.40.2.0050.00**	**9.40.2.0070.00**	**9.40.2.0090.00**	**9.40.2.0110.00**
Type		BK 4	BK 6	BK 12	MK 3/4	G 5/4	G 5/6	G 5/12	KL-16/8	KL-16/12	KL-16/16	KL-16/20	DR 1.5/5	DR 4/6	MA 2.5/5	M 4/6	M 6/8	M 10/10	M 16/12	MBK	MBK 5/E	MBK 10	UK 3 N	UK 5 N	UK 10	UK 16
CA-020		–	–	–	1	–	–	–	–	–	–	–	–	–	–	1	–	–	–	–	–	–	1	–	–	–
CA-060		1	–	–	–	1	–	–	–	–	–	–	4	–	–	–	–	–	–	4	–	–	–	–	–	–
CA-080		–	1	–	–	–	1	–	1	1	–	–	10	–	–	–	–	–	–	12	–	–	–	–	–	–
CA-100		–	–	1	–	–	–	1	–	–	1	1	20	–	–	–	–	–	–	20	–	–	–	–	–	–
CA-130		1	1	–	–	1	1	–	1	–	–	–	6	4	–	–	–	–	–	6	4	–	–	–	–	–
CA-140		1	1	–	–	1	1	–	1	–	–	–	6	4	–	–	–	–	–	6	4	4	–	–	–	–
CA-150		–	1	1	–	–	1	1	1	–	–	–	16	13	–	–	–	–	–	16	13	–	–	–	–	–
CA-160		–	1	1	–	–	1	1	1	–	–	–	16	13	–	–	–	–	–	16	13	10	–	–	–	–
CA-170		–	–	1	–	–	–	–	–	–	1	–	26	21	–	–	–	–	–	26	21	–	–	–	–	–
CA-180		–	–	1	–	–	–	1	–	–	1	–	26	21	–	–	–	–	–	26	21	17	–	–	–	–
CA-190		–	–	2	–	–	–	2	–	2	–	–	39	33	–	–	–	–	–	39	33	27	–	–	–	–
CA-210/215/220		–	–	–	–	–	–	–	–	–	–	–	–	–	12	10	8	6	5	–	–	–	12	10	8	6
CA-230/235/240		–	–	–	–	–	–	–	–	–	–	–	–	–	31	26	19	15	13	–	–	–	31	26	19	15
CA-250		–	–	–	–	–	–	–	–	–	–	–	–	–	58	49	37	29	24	–	–	–	58	49	37	29
CA-270/280		–	–	–	–	–	–	–	–	–	–	–	–	–	19	16	12	9	8	–	–	–	19	16	12	9
CA-290/300		–	–	–	–	–	–	–	–	–	–	–	–	–	38	32	24	19	16	–	–	–	38	32	24	19
CA-310		–	–	–	–	–	–	–	–	–	–	–	–	–	57	48	36	29	24	–	–	–	57	48	36	29
CA-330		–	–	–	–	–	–	–	–	–	–	–	–	–	96	80	61	48	40	–	–	–	96	80	61	48
CA-350		–	–	–	–	–	–	–	–	–	–	–	–	–	27	22	17	13	11	–	–	–	27	22	17	13
CA-350*)		–	–	–	–	–	–	–	–	–	–	–	–	–	54	44	34	26	–	–	–	–	54	44	34	26
CA-360		–	–	–	–	–	–	–	–	–	–	–	–	–	27	22	17	13	11	–	–	–	27	22	17	13
CA-360*)		–	–	–	–	–	–	–	–	–	–	–	–	–	54	44	34	26	–	–	–	–	54	44	34	–
CA-370		–	–	–	–	–	–	–	–	–	–	–	–	–	42	35	27	21	18	–	–	–	42	35	27	21
CA-370*)		–	–	–	–	–	–	–	–	–	–	–	–	–	84	70	54	42	–	–	–	–	84	70	54	42
CA-380		–	–	–	–	–	–	–	–	–	–	–	–	–	52	43	33	26	22	–	–	–	52	43	33	26
CA-380*)		–	–	–	–	–	–	–	–	–	–	–	–	–	104	86	66	52	–	–	–	–	104	86	66	52
CA-390		–	–	–	–	–	–	–	–	–	–	–	–	–	52	43	33	26	22	–	–	–	52	43	33	26
CA-390*)		–	–	–	–	–	–	–	–	–	–	–	–	–	104	86	66	52	–	–	–	–	104	86	66	52
CA-400		–	–	–	–	–	–	–	–	–	–	–	–	–	66	55	41	33	27	–	–	–	66	55	41	33
CA-400*)		–	–	–	–	–	–	–	–	–	–	–	–	–	132	110	82	66	–	–	–	–	132	110	82	66
CA-420		–	–	–	–	–	–	–	–	–	–	–	–	–	104	87	65	53	44	–	–	–	104	87	65	53
CA-420*)		–	–	–	–	–	–	–	–	–	–	–	–	–	208	174	130	106	–	–	–	–	208	174	130	106
CA-450		–	–	–	–	–	–	–	–	–	–	–	–	–	65	55	41	33	28	–	–	–	65	55	41	33
CA-450*)		–	–	–	–	–	–	–	–	–	–	–	–	–	130	110	82	66	56	–	–	–	130	110	82	66
CA-450**)		–	–	–	–	–	–	–	–	–	–	–	–	–	195	165	123	99	–	–	–	–	195	165	123	99
CA-460		–	–	–	–	–	–	–	–	–	–	–	–	–	65	55	41	33	28	–	–	–	65	55	41	33
CA-460*)		–	–	–	–	–	–	–	–	–	–	–	–	–	130	110	82	66	56	–	–	–	130	110	82	66
CA-460**)		–	–	–	–	–	–	–	–	–	–	–	–	–	195	165	123	99	–	–	–	–	195	165	123	99
CA-470		–	–	–	–	–	–	–	–	–	–	–	–	–	104	87	65	53	44	–	–	–	104	87	65	53
CA-470*)		–	–	–	–	–	–	–	–	–	–	–	–	–	208	174	130	106	88	–	–	–	208	174	130	106
CA-470**)		–	–	–	–	–	–	–	–	–	–	–	–	–	312	261	195	159	–	–	–	–	312	261	195	159
CA-480		–	–	–	–	–	–	–	–	–	–	–	–	–	104	87	65	53	44	–	–	–	104	87	65	53
CA-480*)		–	–	–	–	–	–	–	–	–	–	–	–	–	208	174	130	106	88	–	–	–	208	174	130	106
CA-480**)		–	–	–	–	–	–	–	–	–	–	–	–	–	312	261	195	159	–	–	–	–	312	261	195	159

	Siemens							WAGO												Weidmüller								
	Terminal block				Terminal block			Terminal block												Terminal block								
	Screw terminals				Caged tension spring			6.2	10.2	6.2	10.2	4.2	5.2	5.2	6.2	6.2	8.2	10.2	12.2	5.2	6.2	6.2	6.5	8.2	10.2	12.2	5.2	6.2
	4	4	10	25	4	4	10	2.5	2.5	2.5	2.5	1.5	2.5	2.5	4	4	6	10	16	2.5	4	4	6	10	16	25	4	6
	2.5	4	6	16	2.5	4	6	2.5	2.5	2.5	2.5	1.5	2.5	2.5	4	4	6	10	16	1.5	4	2.5	4	6	10	15	2.5	4
	750	750	750	750	750	750	750	800	800	800	800	800	800	800	800	800	800	800	800	250	380	750	750	750	750	750	750	750
	26	35	46	85	36	36	65	26	26	26	26	18	26	26	34	34	44	61	82	27	36	27	36	47	65	87	26	34
	○	○	○	○	○	○	○	○	○	○	○	○	○	○	○	○	○	○	○	○	○	○	○	○	○	○	○	○
	–	○	–	–	–	–	–	○	○	–	–	–	–	–	–	–	–	–	–	○	○	○	–	–	–	–	–	–
	–	–	–	–	–	–	–	–	–	–	–	–	–	–	–	–	–	–	–	–	–	–	○	○	○	○	–	–
	○	○	○	○	○	○	○	–	–	○	○	○	○	○	○	○	○	○	○	–	–	–	–	–	–	–	○	○
	9.40.2.4000.00	**9.40.2.4010.00**	**9.40.2.4020.00**	**9.40.2.4030.00**	**9.40.2.4040.00**	**9.40.2.4050.00**	**9.40.2.4060.00**	**9.40.2.3020.00**	**9.40.2.3030.00**	**9.40.2.3210.00**	**9.40.2.3220.00**	**9.40.2.3230.00**	**9.40.2.0930.00**	**9.40.2.3240.00**	**9.40.2.3250.00**	**9.40.2.3260.00**	**9.40.2.3270.00**	**9.40.2.3280.00**	**9.40.2.3290.00**	**9.40.2.0500.00**	**9.40.2.0130.00**	**9.40.2.0140.00**	**9.40.2.0150.00**	**9.40.2.0160.00**	**9.40.2.0470.00**	**9.40.2.0170.00**	**9.40.2.1460.00**	**9.40.2.1470.00**
	8WA1011-1DF11	8WA1011-1DG11	8WA1011-1DH11	8WA1204	8WA2011-1DF20	8WA2011-1DG20	8WA2011-1DH20	264-701	264-721	264-711	264-731	279-621	280-601	280-901	281-601	281-901	282-601	284-601	283-601	AKZ 2.5 PA	AKZ 4 PA	SAK 2.5 PA	SAK 4 PA	SAK 6 NPA	SAK 10 PA	SAK 16 PA	WDU 2.5	WDU 4
	–	–	–	–	–	–	–	–	–	–	–	–	–	–	–	–	–	–	–	–	–	–	–	–	–	–	–	–
	–	–	–	–	–	–	–	–	–	–	–	–	–	–	–	–	–	–	–	–	–	–	–	–	–	–	–	–
	–	–	–	–	–	–	–	–	–	–	–	–	–	–	–	–	–	–	–	–	–	–	–	–	–	–	–	–
	–	–	–	–	–	–	–	–	–	–	–	–	–	–	–	–	–	–	–	–	–	–	–	–	–	–	–	–
	–	–	–	–	–	–	–	5	3	–	–	–	–	–	–	–	–	–	–	6	4	–	–	–	–	–	–	–
	–	–	–	–	–	–	–	5	3	–	–	–	–	–	–	–	–	–	–	6	4	–	–	–	–	–	–	–
	–	–	–	–	–	–	–	13	8	–	–	–	–	–	–	–	–	–	–	16	12	–	–	–	–	–	–	–
	–	–	–	–	–	–	–	13	8	–	–	–	–	–	–	–	–	–	–	16	12	–	–	–	–	–	–	–
	–	–	–	–	–	–	–	21	13	–	–	–	–	–	–	–	–	–	–	26	20	–	–	–	–	–	–	–
	–	–	–	–	–	–	–	21	13	–	–	–	–	–	–	–	–	–	–	26	20	–	–	–	–	–	–	–
	–	–	–	–	–	–	–	34	20	–	–	–	–	–	–	–	–	–	–	41	33	–	–	–	–	–	–	–
	10	10	8	6	12	10	8	–	–	12	7	18	–	–	–	–	–	–	–	–	–	10	9	7	6	5	12	10
	27	25	20	16	31	26	20	–	–	28	17	43	–	–	–	–	–	–	–	–	–	26	24	20	15	12	31	26
	50	46	37	30	58	49	37	–	–	51	31	43	–	–	–	–	–	–	–	–	–	48	45	37	29	24	58	48
	16	15	12	9	19	16	12	–	–	10	17	25	20	20	17	17	12	10	8	–	–	16	15	12	9	8	19	16
	32	30	24	19	38	32	24	–	–	33	20	50	40	40	33	33	25	20	16	–	–	33	30	25	19	16	38	32
	49	45	37	29	57	48	36	–	–	50	30	76	60	60	50	50	37	30	28	–	–	48	45	36	29	24	57	48
	83	76	62	49	96	80	60	–	–	83	50	125	100	100	83	83	62	50	41	–	–	86	74	61	48	40	96	80
	22	21	17	13	26	22	17	–	–	23	14	35	28	28	23	23	17	14	11	–	–	22	20	17	13	11	26	22
	44	42	34	26	52	44	34	–	–	46	28	70	56	56	46	46	34	28	–	–	–	44	40	34	26	–	52	44
	22	20	17	13	26	22	10	–	–	23	14	35	28	28	23	23	17	14	11	–	–	22	20	17	13	11	26	22
	44	40	34	26	52	49	32	–	–	46	28	70	56	56	46	46	34	28	–	–	–	44	40	34	26	–	52	44
	36	33	27	21	42	35	26	–	–	36	22	55	44	44	37	37	27	22	18	–	–	35	32	26	21	18	42	35
	72	66	54	42	84	70	52	–	–	72	44	110	88	88	74	74	54	44	–	–	–	70	64	52	42	–	84	70
	44	51	33	26	51	43	32	–	–	45	27	68	54	54	45	45	33	27	22	–	–	43	40	32	26	22	51	43
	88	82	66	52	102	86	64	–	–	90	54	136	108	108	90	90	66	54	–	–	–	86	86	64	52	–	102	86
	44	40	33	26	51	43	32	–	–	45	27	68	54	54	45	45	33	27	22	–	–	43	40	32	26	22	51	43
	88	80	66	52	102	86	64	–	–	90	54	136	108	108	90	90	66	54	–	–	–	86	86	64	52	–	102	86
	56	52	42	33	65	54	41	–	–	57	34	86	68	68	57	57	42	34	28	–	–	54	50	41	33	27	65	54
	112	104	84	66	130	108	82	–	–	114	68	172	136	136	114	114	84	68	–	–	–	108	100	–	66	–	130	108
	89	82	67	53	103	86	65	–	–	90	54	135	108	108	90	90	67	54	45	–	–	87	80	65	52	44	103	86
	178	164	134	106	206	172	130	–	–	180	108	270	216	216	180	180	134	108	–	–	–	174	160	–	104	–	206	172
	56	52	42	34	65	55	41	–	–	57	34	86	69	69	57	57	43	34	28	–	–	54	50	41	33	27	65	54
	112	104	84	68	130	110	82	–	–	114	68	172	138	138	114	114	86	68	56	–	–	108	100	82	66	54	130	108
	163	156	126	102	195	165	123	–	–	171	102	258	207	207	171	171	129	102	–	–	–	162	150	–	99	–	195	162
	56	52	42	33	65	54	41	–	–	57	34	86	68	68	57	57	42	34	28	–	–	54	50	41	33	27	65	54
	112	104	84	66	130	108	82	–	–	114	68	172	136	136	114	114	84	68	56	–	–	108	100	82	66	54	130	108
	163	156	126	99	195	162	123	–	–	171	102	258	204	204	171	171	126	102	–	–	–	162	150	–	99	–	195	162
	89	82	67	53	103	68	65	–	–	90	54	135	108	108	90	90	67	54	45	–	–	87	80	65	52	44	103	86
	178	164	134	106	206	172	130	–	–	180	108	270	216	216	180	180	134	108	90	–	–	174	160	130	104	88	206	172
	267	246	201	159	309	258	195	–	–	270	162	405	324	324	270	270	201	162	–	–	–	261	240	–	156	–	309	258
	89	82	67	53	103	86	65	–	–	90	54	135	108	108	90	90	67	54	45	–	–	87	80	65	52	44	103	86
	178	164	134	106	206	172	130	–	–	180	108	270	216	216	180	180	134	108	90	–	–	174	160	130	104	88	206	172
	267	246	201	159	309	258	195	–	–	270	162	405	324	324	270	270	201	162	–	–	–	261	240	–	156	–	309	258

50 x 45 x 30 mm

CA-020
Aluminium enclosure

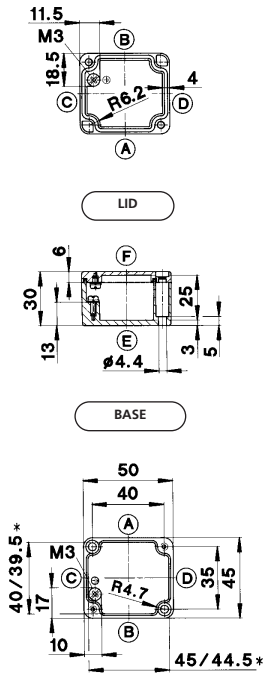

* minimum dimensions at level of mounting plate support

58 x 64 x 36 mm

CA-060
Aluminium enclosure

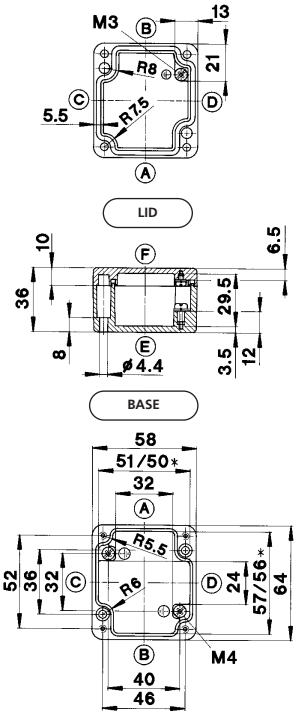

* minimum dimensions at level of mounting plate support

Type		CA-020	CA-060
Weight	(g)	70	160
External dimensions	(mm)	50 x 45 x 30	58 x 64 x 36
Complete enclosures		**Part number**	**Part number**
Coated, with gasket and lid screws		**102.0.0000.00** ●	**106.0.0000.00** ●
Coated, with gasket and hex. socket head screws		–	–
Coated, with silicone gasket and lid screws		–	**106.0.0940.00**
Coated, with HF gasket and lid screws		–	**106.0.0080.00**
Saltwater-proof coating, with gasket and lid screws		**102.0.0100.00**	**106.0.0100.00**
Saltwater-proof coating, passivated, lid screws with gasket		**102.0.0060.00**	**106.0.0060.00**
Unwashed, unpainted, no accessories		**102.0.0340.00**	**106.0.0380.00**
Accessories (separate or as a mounting set)			
Mounting plate		–	**951.1.0010.00** ●
TS 15 mounting rail		–	**982.0.0000.00** ●
TS 32 mounting rail		–	–
TS 35 mounting rail		–	–
Grounding rail		–	–
External attachment brackets		–	–
External hinges side		–	–
Internal hinges with lid guiding**		–	–
Silicone gasket for wider temperature range (piece goods)		–	**923.1.0050.00** ●

Max. Pg threads

ISO M	12	16	20	25	32	40	50	63
Side A/B	1	0	0	0	0	0	0	0
Side C/D	1	0	0	0	0	0	0	0

** mechanical enclosure machining required

● = kept in stock

ISO M	12	16	20	25	32	40	50	63
Side A/B	2	1	0	0	0	0	0	0
Side C/D	1	0	0	0	0	0	0	0

** mechanical enclosure machining required

● = kept in stock

98 x 64 x 36 mm

CA-080
Aluminium enclosure

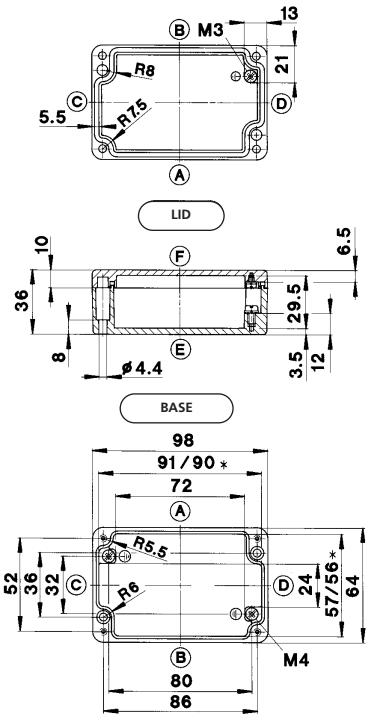

* minimum dimensions at level of mounting plate support

CA-080
220
98 x 64 x 36
Part number
108.0.0000.00 ●
–
108.0.0090.00
108.0.0080.00
108.0.0100.00
108.0.0060.00
108.0.0420.00
951.1.0020.00 ●
982.0.0050.00 ●
–
–
–
–
–
–
923.1.0050.00 ●

ISO M	12	16	20	25	32	40	50	63
Side A/B	4	3	0	0	0	0	0	0
Side C/D	1	0	0	0	0	0	0	0

** mechanical enclosure machining required

● = kept in stock

150 x 64 x 36 mm

CA-100
Aluminium enclosure

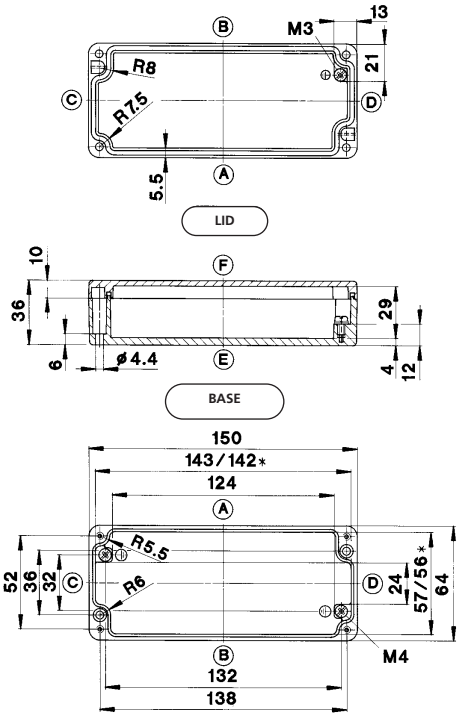

* minimum dimensions at level of mounting plate support

CA-100
330
150 x 64 x 36
Part number
110.0.0000.00 ●
–
110.0.0760.00
110.0.0080.00
110.0.0100.00
110.0.0060.00
110.0.0530.00
951.1.0030.00 ●
982.0.0110.00 ●
–
–
–
–
–
–
923.1.0050.00 ●

ISO M	12	16	20	25	32	40	50	63
Side A/B	6	4	0	0	0	0	0	0
Side C/D	1	0	0	0	0	0	0	0

** mechanical enclosure machining required

● = kept in stock

75 x 80 x 57 mm

CA-130
Aluminium enclosure

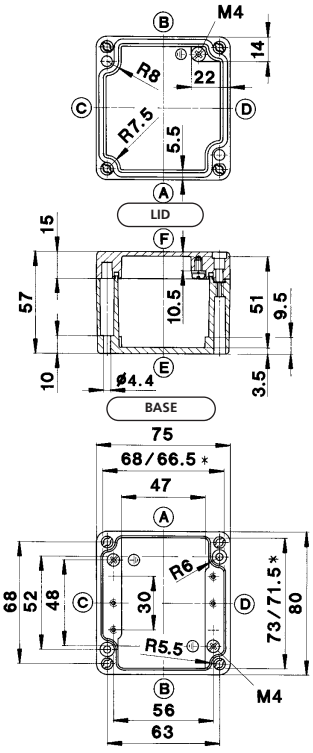

* minimum dimensions at level of mounting plate support

CA-130
280
75 x 80 x 57
Part number
113.0.0000.00 ●
–
113.0.0820.00
113.0.0080.00
113.0.0100.00
113.0.0060.00
113.0.0570.00
982.3.0150.00 ●
982.0.0020.00 ●
–
–
–
–
980.1.0440.00 ●
–
923.1.0050.00 ●

ISO M	12	16	20	25	32	40	50	63
Side A/B	5	2	1	0	0	0	0	0
Side C/D	3	2	1	0	0	0	0	0

** mechanical enclosure machining required

● = kept in stock

75 x 80 x 57 mm

CA-140
Aluminium enclosure

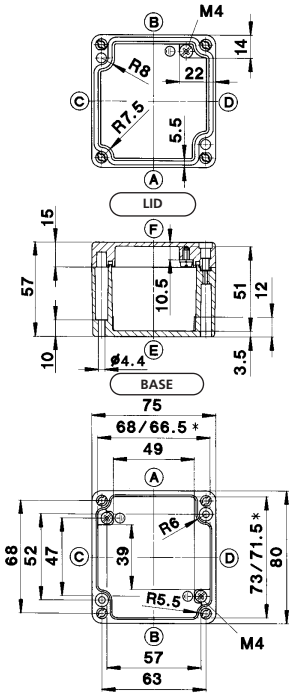

* minimum dimensions at level of mounting plate support

125 x 80 x 57 mm

CA-150
Aluminium enclosure

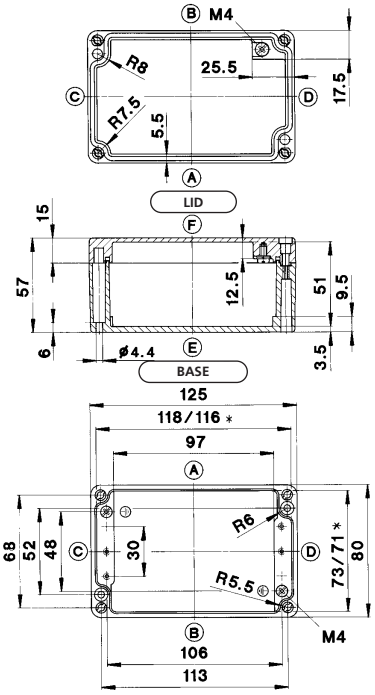

* minimum dimensions at level of mounting plate support

Type		CA-140	CA-150
Weight	(g)	280	435
External dimensions	(mm)	75 x 80 x 57	125 x 80 x 57
Complete enclosures		**Part number**	**Part number**
Coated, with gasket and lid screws		**114.0.0000.00** ●	**115.0.0000.00** ●
Coated, with gasket and hex. socket head screws		–	–
Coated, with silicone gasket and lid screws		**114.0.0860.00**	**115.0.0090.00**
Coated, with HF gasket and lid screws		**114.0.0080.00**	**115.0.0080.00**
Saltwater-proof coating, with gasket and lid screws		**114.0.0100.00**	**115.0.0100.00**
Saltwater-proof coating, passivated, lid screws with gasket		**114.0.0060.00**	**115.0.0060.00**
Unwashed, unpainted, no accessories		**114.0.0800.00**	**115.0.0190.00**
Accessories (separate or as a mounting set)			
Mounting plate		**951.1.0040.00** ●	**982.3.0160.00** ●
TS 15 mounting rail		**982.0.0350.00** ●	**982.0.0100.00** ●
TS 32 mounting rail		–	–
TS 35 mounting rail		–	–
Grounding rail		–	–
External attachment brackets		–	–
External hinges side		**980.1.0440.00** ●	**980.1.0440.00** ●
Internal hinges with lid guiding**		–	–
Silicone gasket for wider temperature range (piece goods)		**923.1.0050.00** ●	**923.1.0050.00** ●

Max. Pg threads

ISO M	12	16	20	25	32	40	50	63
Side A/B	5	2	1	1	0	0	0	0
Side C/D	3	2	1	1	0	0	0	0

** mechanical enclosure machining required

● = kept in stock

ISO M	12	16	20	25	32	40	50	63
Side A/B	10	4	3	2	0	0	0	0
Side C/D	3	2	1	0	0	0	0	0

** mechanical enclosure machining required

● = kept in stock

125 x 80 x 57 mm

CA-160
Aluminium enclosure

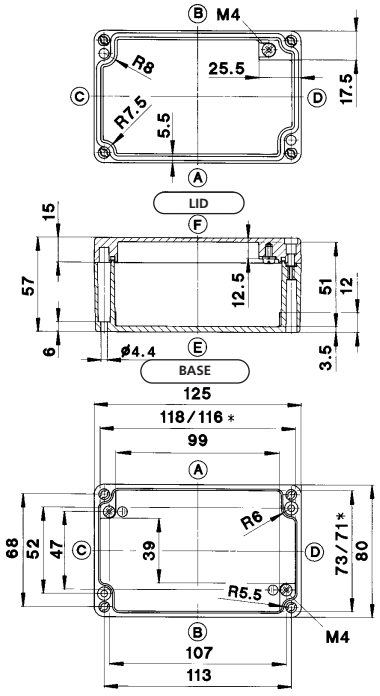

* minimum dimensions at level of mounting plate support

CA-160
435
125 x 80 x 57
Part number
116.0.0000.00 ●
–
116.0.1380.00
116.0.0080.00
116.0.0100.00
116.0.0060.00
116.0.0450.00
951.1.0050.00 ●
982.0.0360.00 ●
–
–
–
–
980.1.0440.00 ●
–
923.1.0050.00 ●

ISO M	12	16	20	25	32	40	50	63
Side A/B	10	4	3	2	0	0	0	0
Side C/D	4	2	1	1	0	0	0	0

** mechanical enclosure machining required

● = kept in stock

175 x 80 x 57 mm

CA-170
Aluminium enclosure

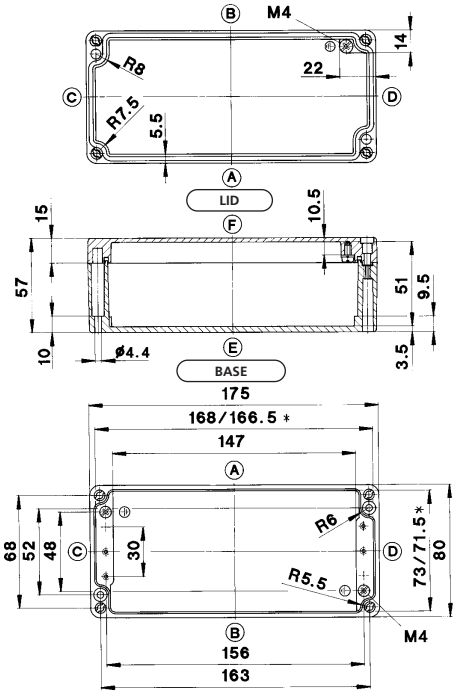

* minimum dimensions at level of mounting plate support

CA-170
530
175 x 80 x 57
Part number
117.0.0000.00 ●
–
117.0.0090.00
117.0.0080.00
117.0.0100.00
117.0.0060.00
117.0.0160.00
982.3.0170.00 ●
982.0.0140.00 ●
–
–
–
–
980.1.0440.00 ●
–
923.1.0050.00 ●

ISO M	12	16	20	25	32	40	50	63
Side A/B	14	6	4	4	0	0	0	0
Side C/D	3	2	1	0	0	0	0	0

** mechanical enclosure machining required

● = kept in stock

175 x 80 x 57 mm

CA-180
Aluminium enclosure

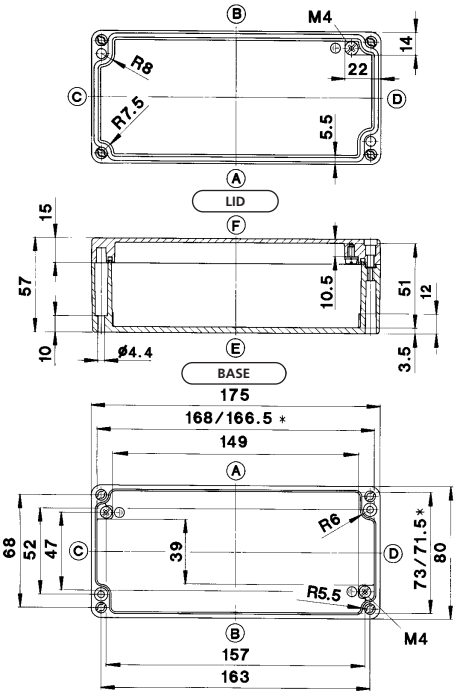

* minimum dimensions at level of mounting plate support

CA-180
530
175 x 80 x 57
Part number
118.0.0000.00 ●
–
118.0.0440.00
118.0.0080.00
118.0.0100.00
118.0.0060.00
118.0.0400.00
951.1.0060.00 ●
982.0.0370.00 ●
–
–
–
–
980.1.0440.00 ●
–
923.1.0050.00 ●

ISO M	12	16	20	25	32	40	50	63
Side A/B	14	6	4	4	0	0	0	0
Side C/D	4	2	1	1	0	0	0	0

** mechanical enclosure machining required

● = kept in stock

250 x 80 x 57 mm

CA-190
Aluminium enclosure

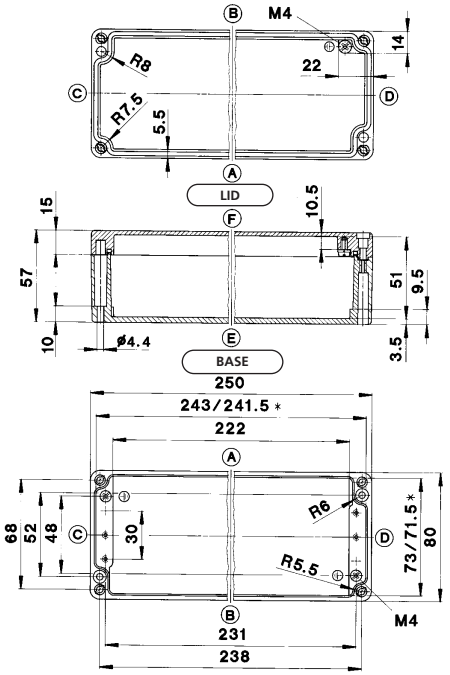

* minimum dimensions at level of mounting plate support

122 x 122 x 80 mm

CA-210
Aluminium enclosure

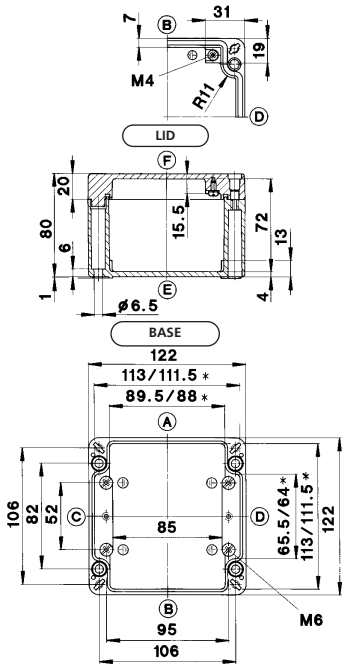

* minimum dimensions at level of mounting plate support

Type		CA-190	CA-210
Weight	(g)	710	940
External dimensions	(mm)	250 x 80 x 57	122 x 122 x 80
Complete enclosures		**Part number**	**Part number**
Coated, with gasket and lid screws		**119.0.0000.00** ●	**121.0.0000.00** ●
Coated, with gasket and hex. socket head screws		–	**121.0.0010.00**
Coated, with silicone gasket and lid screws		**119.0.0480.00**	**121.0.0150.00**
Coated, with HF gasket and lid screws		**119.0.0080.00**	**121.0.0080.00**
Saltwater-proof coating, with gasket and lid screws		**119.0.0100.00**	**121.0.0100.00**
Saltwater-proof coating, passivated, lid screws with gasket		**119.0.0060.00**	**121.0.0060.00**
Unwashed, unpainted, no accessories		**119.0.0260.00**	**121.0.0160.00**
Accessories (separate or as a mounting set)			
Mounting plate		**982.3.0210.00** ●	**951.1.1500.00** ●
TS 15 mounting rail		**982.0.0190.00** ●	–
TS 32 mounting rail		–	**982.1.0000.00** ●
TS 35 mounting rail		–	**982.2.0010.00**
Grounding rail		–	**981.0.0020.00**
External attachment brackets		–	**982.4.0240.00** ●
External hinges side		**980.1.0440.00** ●	**980.1.0470.00** ●
Internal hinges with lid guiding**		–	**980.1.0310.00**
Silicone gasket for wider temperature range (piece goods)		**923.1.0050.00** ●	**923.1.0060.00** ●

Max. Pg threads

ISO M	12	16	20	25	32	40	50	63
Side A/B	22	9	7	5	0	0	0	0
Side C/D	3	2	1	0	0	0	0	0

** mechanical enclosure machining required

● = kept in stock

ISO M	12	16	20	25	32	40	50	63
Side A/B	12	6	4	2	2	0	0	0
Side C/D	5	2	2	1	0	0	0	0

** mechanical enclosure machining required

● = kept in stock

122 x 122 x 90 mm

CA-215
Aluminium enclosure

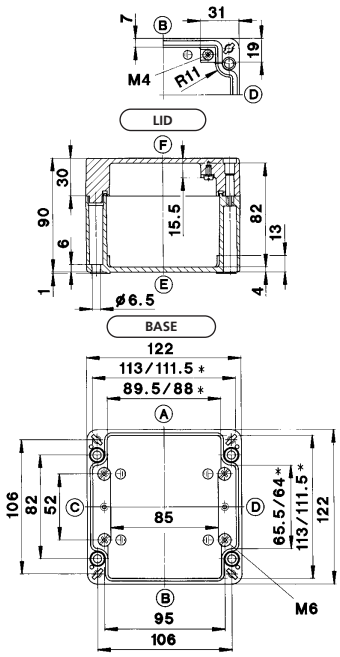

* minimum dimensions at level of mounting plate support

CA-215
920
122 x 122 x 90
Part number
121.0.0000.50 ●
121.0.0010.50
121.0.0110.50
121.0.0080.50
121.0.0100.50
121.0.0060.50
121.0.0120.50
951.1.1500.00 ●
–
982.1.0000.00 ●
982.2.0010.00 ●
981.0.0020.00 ●
982.4.0240.00 ●
980.1.0470.00 ●
980.1.0310.00 ●
923.1.0060.00 ●

ISO M	12	16	20	25	32	40	50	63
Side A/B	12	6	4	2	2	0	0	0
Side C/D	5	2	2	1	0	0	0	0

** mechanical enclosure machining required

● = kept in stock

122 x 122 x 80 mm

CA-220
Aluminium enclosure

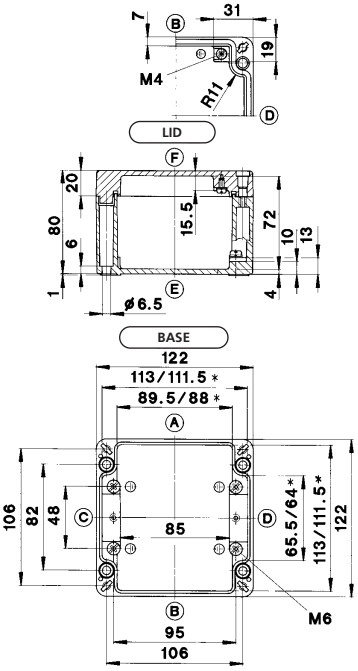

* minimum dimensions at level of mounting plate support

CA-220
940
122 x 122 x 80
Part number
122.0.0000.00 ●
122.0.0010.00
122.0.0270.00
122.0.0080.00
122.0.0100.00
122.0.0060.00
122.0.0610.00
951.1.0080.00 ●
–
982.1.0000.00 ●
982.2.0010.00 ●
981.0.0020.00 ●
982.4.0240.00 ●
980.1.0470.00 ●
980.1.0310.00
923.1.0060.00 ●

ISO M	12	16	20	25	32	40	50	63
Side A/B	12	6	4	2	2	0	0	0
Side C/D	5	2	2	1	0	0	0	0

** mechanical enclosure machining required

● = kept in stock

220 x 122 x 80 mm

CA-230
Aluminium enclosure

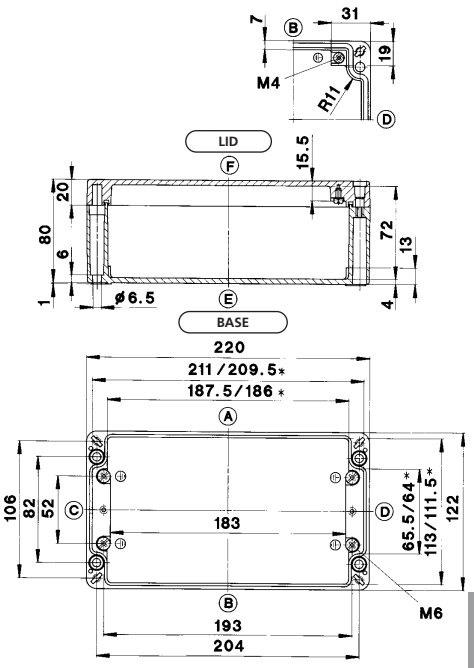

* minimum dimensions at level of mounting plate support

CA-230
1410
220 x 122 x 80
Part number
123.0.0000.00 ●
123.0.0010.00
123.0.0160.00
123.0.0080.00
123.0.0100.00
123.0.0060.00
123.0.0150.00
951.1.0950.00 ●
–
982.1.0050.00 ●
982.2.0070.00 ●
981.0.0080.00 ●
982.4.0240.00 ●
980.1.0470.00 ●
980.1.0310.00
923.1.0060.00 ●

ISO M	12	16	20	25	32	40	50	63
Side A/B	27	12	8	5	4	0	0	0
Side C/D	5	2	2	1	0	0	0	0

** mechanical enclosure machining required

● = kept in stock

220 x 122 x 90 mm

CA-235
Aluminium enclosure

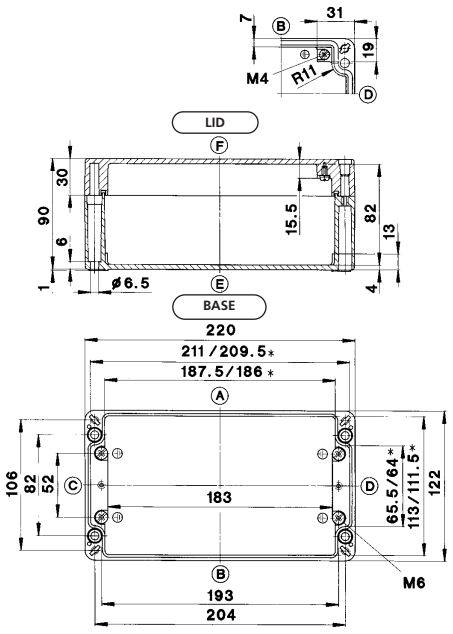

* minimum dimensions at level of mounting plate support

Type	CA-235
Weight (g)	1410
External dimensions (mm)	220 x 122 x 90
Complete enclosures	**Part number**
Coated, with gasket and lid screws	**123.0.0000.50** ●
Coated, with gasket and hex. socket head screws	**123.0.0010.50**
Coated, with silicone gasket and lid screws	**123.0.0110.50**
Coated, with HF gasket and lid screws	**123.0.0080.50**
Saltwater-proof coating, with gasket and lid screws	**123.0.0100.50**
Saltwater-proof coating, passivated, lid screws with gasket	**123.0.0060.50**
Unwashed, unpainted, no accessories	**123.0.0120.50**
Accessories (separate or as a mounting set)	
Mounting plate	**951.1.0950.00** ●
TS 15 mounting rail	–
TS 32 mounting rail	**982.1.0050.00** ●
TS 35 mounting rail	**982.2.0070.00** ●
Grounding rail	**981.0.0080.00** ●
External attachment brackets	**982.4.0240.00** ●
External hinges side	**980.1.0470.00** ●
Internal hinges with lid guiding**	**980.1.0310.00** ●
Silicone gasket for wider temperature range (piece goods)	**923.1.0060.00** ●

Max. Pg threads

ISO M	12	16	20	25	32	40	50	63
Side A/B	27	12	8	5	4	0	0	0
Side C/D	5	2	2	1	0	0	0	0

** mechanical enclosure machining required

● = kept in stock

220 x 122 x 80 mm

CA-240
Aluminium enclosure

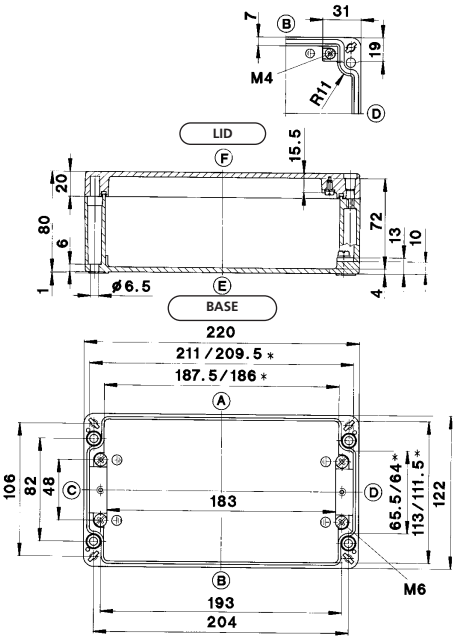

* minimum dimensions at level of mounting plate support

Type	CA-240
Weight (g)	1410
External dimensions (mm)	220 x 122 x 80
Complete enclosures	**Part number**
Coated, with gasket and lid screws	**124.0.0000.00** ●
Coated, with gasket and hex. socket head screws	**124.0.0010.00**
Coated, with silicone gasket and lid screws	**124.0.0970.00**
Coated, with HF gasket and lid screws	**124.0.0080.00**
Saltwater-proof coating, with gasket and lid screws	**124.0.0100.00**
Saltwater-proof coating, passivated, lid screws with gasket	**124.0.0060.00**
Unwashed, unpainted, no accessories	**124.0.0820.00**
Accessories (separate or as a mounting set)	
Mounting plate	**951.1.0090.00** ●
TS 15 mounting rail	–
TS 32 mounting rail	**982.1.0050.00** ●
TS 35 mounting rail	**982.2.0070.00** ●
Grounding rail	**981.0.0080.00** ●
External attachment brackets	**982.0.0240.00** ●
External hinges side	**980.1.0470.00** ●
Internal hinges with lid guiding**	**980.1.0310.00** ●
Silicone gasket for wider temperature range (piece goods)	**923.1.0060.00** ●

ISO M	12	16	20	25	32	40	50	63
Side A/B	27	12	8	5	4	0	0	0
Side C/D	5	2	2	1	0	0	0	0

** mechanical enclosure machining required

● = kept in stock

360 x 122 x 80 mm

CA-250
Aluminium enclosure

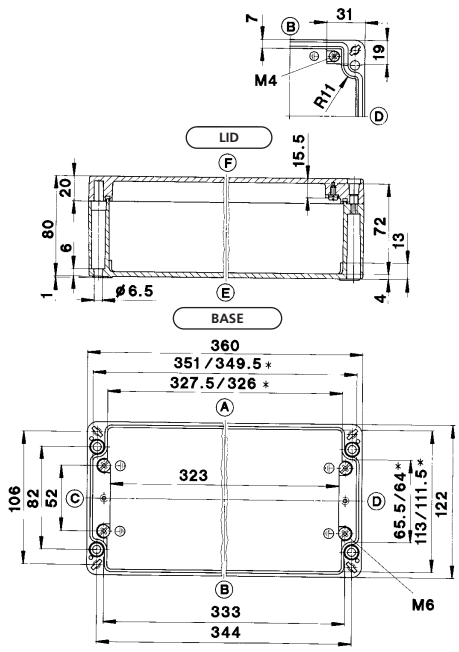

* minimum dimensions at level of mounting plate support

CA-250
1860
360 x 122 x 80
Part number
125.0.0000.00 ●
125.0.0010.00
125.0.1240.00
125.0.0080.00
125.0.0100.00
125.0.0060.00
125.0.0110.00
951.1.1740.00 ●
–
982.1.0120.00 ●
982.2.0150.00 ●
981.0.0140.00 ●
982.4.0240.00 ●
980.1.0470.00 ●
980.1.0310.00 ●
923.1.0060.00 ●

ISO M	12	16	20	25	32	40	50	63
Side A/B	48	21	16	9	6	0	0	0
Side C/D	5	2	2	1	0	0	0	0

** mechanical enclosure machining required

● = kept in stock

160 x 160 x 90 mm

CA-270
Aluminium enclosure

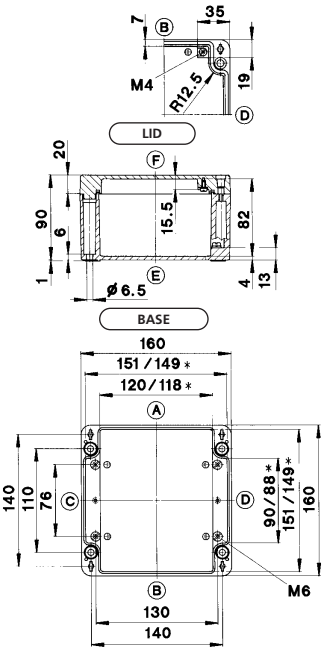

* minimum dimensions at level of mounting plate support

CA-270
1410
160 x 160 x 90
Part number
127.0.0000.00 ●
127.0.0010.00
127.0.0120.00
127.0.0080.00
127.0.0100.00
127.0.0060.00
127.0.0130.00
951.1.1490.00 ●
–
982.1.0020.00 ●
982.2.0030.00 ●
981.0.0040.00 ●
982.4.0240.00 ●
980.1.0470.00 ●
980.1.0300.00 ●
923.1.0060.00 ●

ISO M	12	16	20	25	32	40	50	63
Side A/B	20	9	6	4	2	2	1	0
Side C/D	8	4	3	2	2	0	0	0

** mechanical enclosure machining required

● = kept in stock

160 x 160 x 90 mm

CA-280
Aluminium enclosure

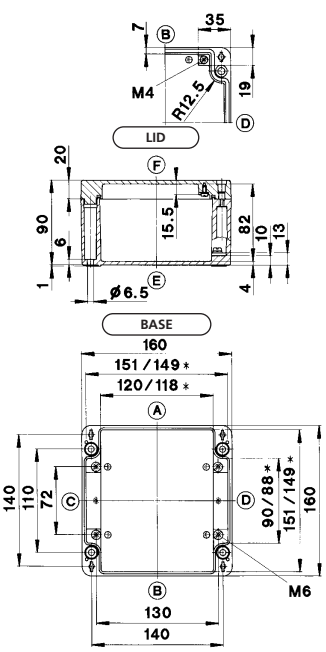

* minimum dimensions at level of mounting plate support

CA-280
1410
160 x 160 x 90
Part number
128.0.0000.00 ●
128.0.0010.00
128.0.0590.00
128.0.0080.00
128.0.0100.00
128.0.0060.00
128.0.0330.00
951.1.0110.00 ●
–
982.1.0020.00 ●
982.2.0030.00 ●
981.0.0040.00 ●
982.4.0240.00 ●
980.1.0470.00 ●
980.1.0300.00 ●
923.1.0060.00 ●

ISO M	12	16	20	25	32	40	50	63
Side A/B	20	9	6	4	2	2	1	0
Side C/D	8	4	3	2	2	0	0	0

** mechanical enclosure machining required

● = kept in stock

260 x 160 x 90 mm

CA-290
Aluminium enclosure

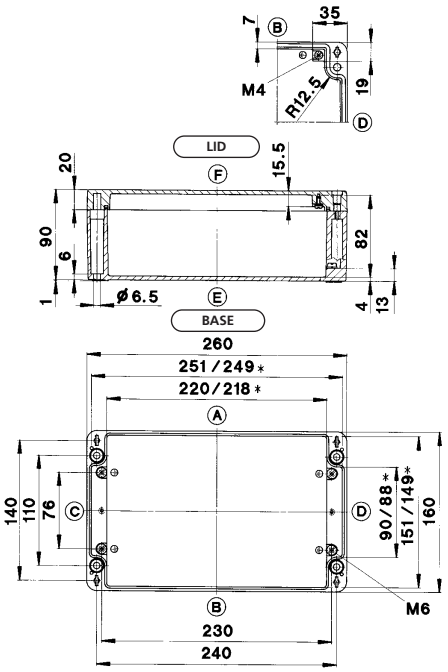

* minimum dimensions at level of mounting plate support

Type	CA-290
Weight (g)	1960
External dimensions (mm)	260 x 160 x 90
Complete enclosures	**Part number**
Coated, with gasket and lid screws	**129.0.0000.00** ●
Coated, with gasket and hex. socket head screws	**129.0.0010.00**
Coated, with silicone gasket and lid screws	**129.0.0470.00**
Coated, with HF gasket and lid screws	**129.0.0080.00**
Saltwater-proof coating, with gasket and lid screws	**129.0.0100.00**
Saltwater-proof coating, passivated, lid screws with gasket	**129.0.0060.00**
Unwashed, unpainted, no accessories	**129.0.0110.00**
Accessories (separate or as a mounting set)	
Mounting plate	**951.1.0960.00** ●
TS 15 mounting rail	–
TS 32 mounting rail	**982.1.0080.00** ●
TS 35 mounting rail	**982.2.0110.00** ●
Grounding rail	**981.0.0100.00** ●
External attachment brackets	**982.4.0240.00** ●
External hinges side	**980.1.0470.00** ●
Internal hinges with lid guiding**	**980.1.0300.00** ●
Silicone gasket for wider temperature range (piece goods)	**923.1.0060.00** ●

Max. Pg threads

ISO M	12	16	20	25	32	40	50	63
Side A/B	36	17	12	7	4	3	3	0
Side C/D	8	4	3	2	2	0	0	0

** mechanical enclosure machining required

● = kept in stock

260 x 160 x 90 mm

CA-300
Aluminium enclosure

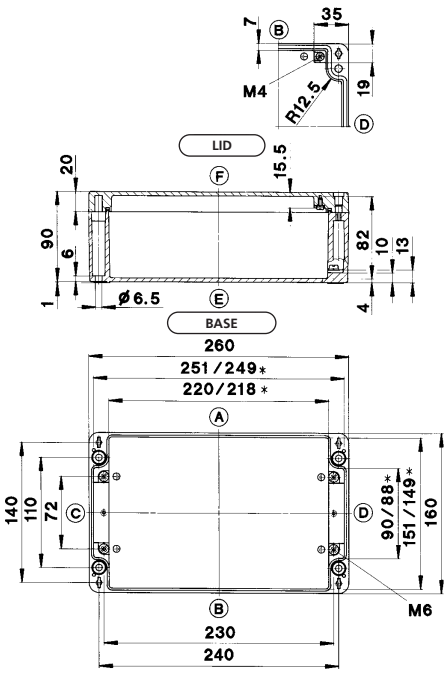

* minimum dimensions at level of mounting plate support

Type	CA-300
Weight (g)	1960
External dimensions (mm)	260 x 160 x 90
Complete enclosures	**Part number**
Coated, with gasket and lid screws	**130.0.0000.00** ●
Coated, with gasket and hex. socket head screws	**130.0.0010.00**
Coated, with silicone gasket and lid screws	**130.0.0640.00**
Coated, with HF gasket and lid screws	**130.0.0080.00**
Saltwater-proof coating, with gasket and lid screws	**130.0.0100.00**
Saltwater-proof coating, passivated, lid screws with gasket	**130.0.0060.00**
Unwashed, unpainted, no accessories	**130.0.0410.00**
Accessories (separate or as a mounting set)	
Mounting plate	**951.1.0120.00** ●
TS 15 mounting rail	–
TS 32 mounting rail	**982.1.0080.00** ●
TS 35 mounting rail	**982.2.0110.00** ●
Grounding rail	**981.0.0100.00** ●
External attachment brackets	**982.4.0240.00** ●
External hinges side	**980.1.0470.00** ●
Internal hinges with lid guiding**	**980.1.0300.00** ●
Silicone gasket for wider temperature range (piece goods)	**923.1.0060.00** ●

ISO M	12	16	20	25	32	40	50	63
Side A/B	36	17	12	7	4	3	3	0
Side C/D	8	4	3	2	2	0	0	0

** mechanical enclosure machining required

● = kept in stock

360 x 160 x 90 mm

CA-310
Aluminium enclosure

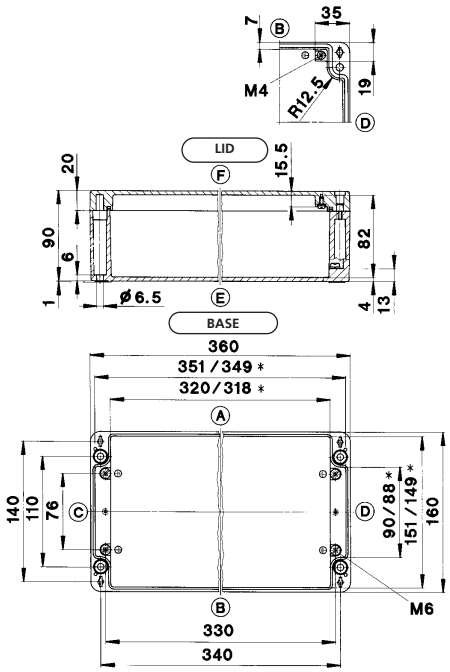

CA-310								
2550								
360 x 160 x 90								
Part number								
131.0.0000.00 ●								
131.0.0010.00								
131.0.1580.00								
131.0.0080.00								
131.0.0100.00								
131.0.0060.00								
131.0.0710.00								
951.1.1750.00 ●								
–								
982.1.0120.00 ●								
982.2.0150.00 ●								
981.0.0420.00 ●								
982.4.0240.00 ●								
980.1.0470.00 ●								
980.1.0300.00 ●								
923.1.0060.00 ●								

ISO M	12	16	20	25	32	40	50	63
Side A/B	54	26	18	11	6	5	4	0
Side C/D	8	4	3	2	2	0	0	0

** mechanical enclosure machining required

● = kept in stock

560 x 160 x 90 mm

CA-330
Aluminium enclosure

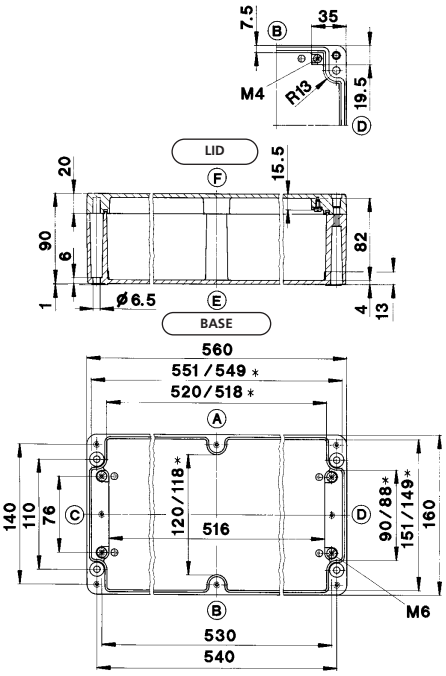

CA-330								
4310								
560 x 160 x 90								
Part number								
133.0.0000.00 ●								
133.0.0010.00								
133.0.0560.00								
133.0.0080.00								
133.0.0100.00								
133.0.0060.00								
133.0.0220.00								
951.1.0140.00 ●								
–								
982.1.0150.00 ●								
982.2.0180.00 ●								
981.0.0160.00 ●								
982.4.0240.00 ●								
980.1.0470.00 ●								
980.1.0300.00 ●								
923.1.0090.00 ●								

ISO M	12	16	20	25	32	40	50	63
Side A/B	84	40	28	16	10	8	6	0
Side C/D	8	4	3	2	2	0	0	0

** mechanical enclosure machining required

● = kept in stock

200 x 230 x 110 mm

CA-350
Aluminium enclosure

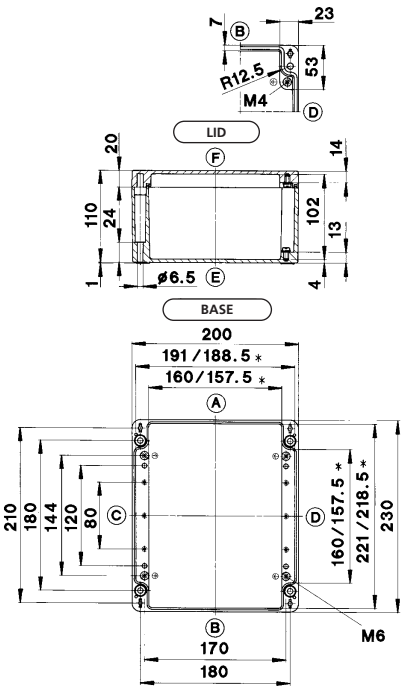

CA-350								
2730								
200 x 230 x 110								
Part number								
135.0.0000.00 ●								
135.0.0010.00								
135.0.0780.00								
135.0.0080.00								
135.0.0100.00								
135.0.0060.00								
135.0.0170.00								
951.1.0150.00 ●								
–								
982.1.0030.00 ●								
982.2.0050.00 ●								
981.0.0070.00 ●								
982.4.0230.00 ●								
980.1.0470.00 ●								
980.1.0300.00 ●								
923.1.0060.00 ●								

ISO M	12	16	20	25	32	40	50	63
Side A/B	35	15	12	8	4	3	2	2
Side C/D	26	12	8	5	3	2	2	1

** mechanical enclosure machining required

● = kept in stock

200 x 230 x 180 mm

CA-360
Aluminium enclosure

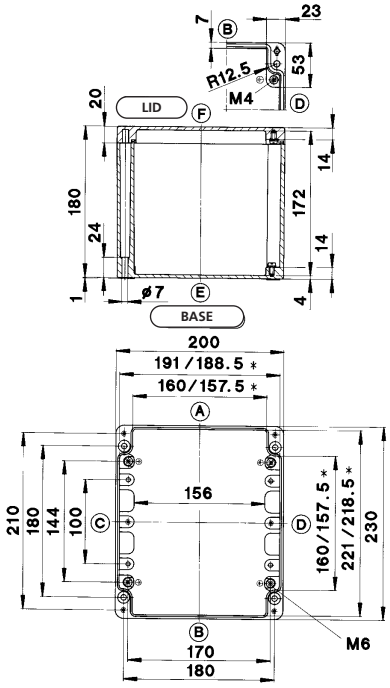

* minimum dimensions at level of mounting plate support

280 x 230 x 110 mm

CA-370
Aluminium enclosure

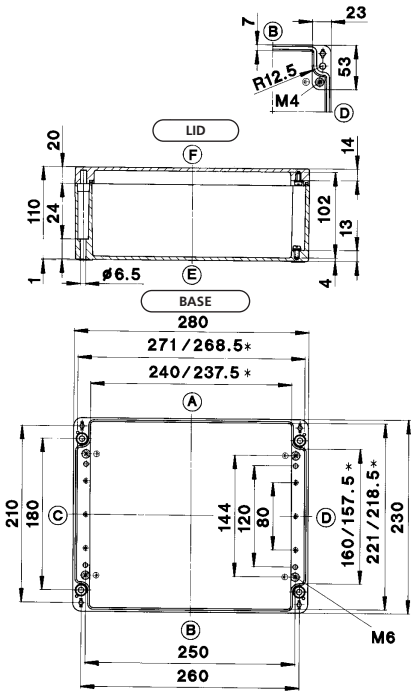

* minimum dimensions at level of mounting plate support

Type		CA-360	CA-370
Weight	(g)	3680	3840
External dimensions	(mm)	200 x 230 x 180	280 x 230 x 110
Complete enclosures		**Part number**	**Part number**
Coated, with gasket and lid screws		**136.0.0000.00** ●	**137.0.0000.00** ●
Coated, with gasket and hex. socket head screws		**136.0.0010.00**	**137.0.0010.00**
Coated, with silicone gasket and lid screws		**136.0.0440.00**	**137.0.0730.00**
Coated, with HF gasket and lid screws		**136.0.0080.00**	**137.0.0080.00**
Saltwater-proof coating, with gasket and lid screws		**136.0.0100.00**	**137.0.0100.00**
Saltwater-proof coating, passivated, lid screws with gasket		**136.0.0060.00**	**137.0.0060.00**
Unwashed, unpainted, no accessories		**136.0.0430.00**	**137.0.0150.00**
Accessories (separate or as a mounting set)			
Mounting plate		**951.1.0150.00** ●	**951.1.0160.00** ●
TS 15 mounting rail		–	–
TS 32 mounting rail		**982.1.0030.00** ●	**982.1.0090.00** ●
TS 35 mounting rail		**982.2.0050.00** ●	**982.2.0120.00** ●
Grounding rail		**981.0.0070.00** ●	**981.0.0110.00** ●
External attachment brackets		**982.4.0230.00** ●	**982.4.0230.00** ●
External hinges side		**980.1.0470.00** ●	**980.1.0470.00** ●
Internal hinges with lid guiding**		**980.1.0300.00** ●	**980.1.0300.00** ●
Silicone gasket for wider temperature range (piece goods)		**923.1.0060.00** ●	**923.1.0060.00** ●

Max. Pg threads

ISO M	12	16	20	25	32	40	50	63
Side A/B	56	32	20	13	9	5	4	4
Side C/D	52	27	18	12	8	5	3	3

** mechanical enclosure machining required

● = kept in stock

ISO M	12	16	20	25	32	40	50	63
Side A/B	53	25	18	11	7	4	3	3
Side C/D	26	12	8	5	3	2	2	1

** mechanical enclosure machining required

● = kept in stock

330 x 230 x 110 mm

CA-380
Aluminium enclosure

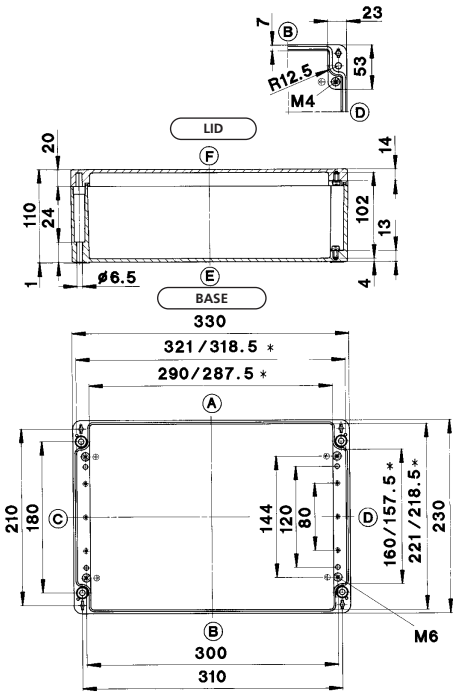

* minimum dimensions at level of mounting plate support

CA-380
4270
330 x 230 x 110
Part number
138.0.0000.00 ●
138.0.0010.00
138.0.0520.00
138.0.0080.00
138.0.0100.00
138.0.0060.00
138.0.0140.00
951.1.0170.00 ●
–
982.1.0110.00 ●
982.2.0140.00 ●
981.0.0130.00 ●
982.4.0230.00 ●
980.1.0470.00 ●
980.1.0300.00 ●
923.1.0060.00 ●

ISO M	12	16	20	25	32	40	50	63
Side A/B	65	30	23	12	9	5	4	3
Side C/D	24	12	8	5	3	2	2	1

** mechanical enclosure machining required

● = kept in stock

330 x 230 x 180 mm

CA-390
Aluminium enclosure

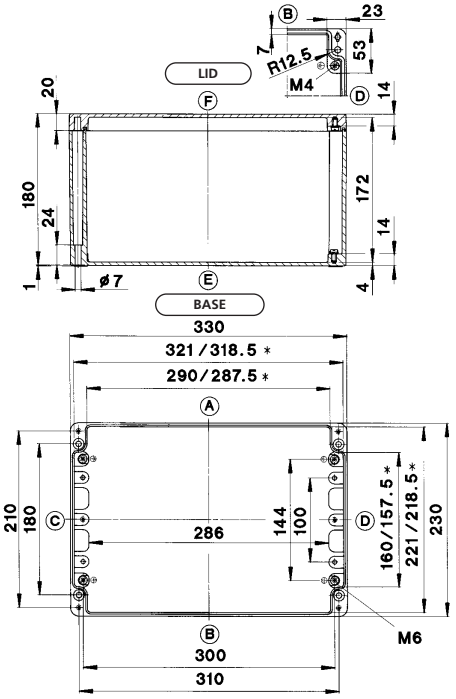

* minimum dimensions at level of mounting plate support

CA-390
5300
330 x 230 x 180
Part number
139.0.0000.00 ●
139.0.0010.00
139.0.0200.00
139.0.0080.00
139.0.0100.00
139.0.0060.00
139.0.0120.00
951.1.0170.00 ●
–
982.1.0110.00 ●
982.2.0140.00 ●
981.0.0130.00 ●
982.4.0230.00 ●
980.1.0470.00 ●
980.1.0300.00 ●
923.1.0060.00 ●

ISO M	12	16	20	25	32	40	50	63
Side A/B	108	54	40	25	15	9	8	6
Side C/D	52	27	18	12	8	5	3	3

** mechanical enclosure machining required

● = kept in stock

400 x 230 x 110 mm

CA-400
Aluminium enclosure

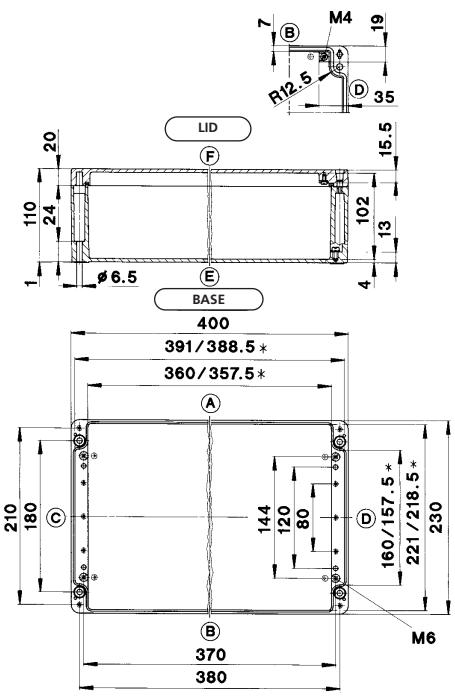

* minimum dimensions at level of mounting plate support

CA-400
4870
400 x 230 x 110
Part number
140.0.0000.00 ●
140.0.0010.00
140.0.0620.00
140.0.0080.00
140.0.0100.00
140.0.0060.00
140.0.0130.00
951.1.2940.00 ●
–
982.1.0140.00 ●
982.2.0170.00 ●
981.0.0150.00 ●
982.4.0230.00 ●
980.1.0470.00 ●
980.1.0300.00 ●
923.1.0060.00 ●

ISO M	12	16	20	25	32	40	50	63
Side A/B	80	38	27	17	11	6	5	4
Side C/D	26	12	8	5	3	2	2	1

** mechanical enclosure machining required

● = kept in stock

600 x 230 x 110 mm

CA-420
Aluminium enclosure

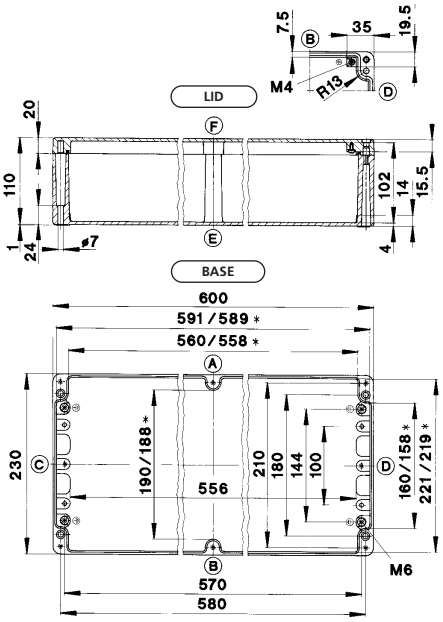

* minimum dimensions at level of mounting plate support

Type	CA-420
Weight (g)	6380
External dimensions (mm)	600 x 230 x 110
Complete enclosures	**Part number**
Coated, with gasket and lid screws	**142.0.0000.00** ●
Coated, with gasket and hex. socket head screws	**142.0.0010.00**
Coated, with silicone gasket and lid screws	**142.0.0550.00**
Coated, with HF gasket and lid screws	**142.0.0080.00**
Saltwater-proof coating, with gasket and lid screws	**142.0.0100.00**
Saltwater-proof coating, passivated, lid screws with gasket	**142.0.0060.00**
Unwashed, unpainted, no accessories	**142.0.0110.00**
Accessories (separate or as a mounting set)	
Mounting plate	**951.1.0190.00** ●
TS 15 mounting rail	–
TS 32 mounting rail	**982.1.0160.00** ●
TS 35 mounting rail	**982.2.0190.00** ●
Grounding rail	**981.0.0170.00** ●
External attachment brackets	**982.4.0230.00** ●
External hinges side	**980.1.0470.00** ●
Internal hinges with lid guiding**	**980.1.0300.00** ●
Silicone gasket for wider temperature range (piece goods)	**923.1.0060.00** ●

Max. Pg threads

ISO M	12	16	20	25	32	40	50	63
Side A/B	120	56	42	24	16	8	8	6
Side C/D	28	13	8	5	3	2	2	1

** mechanical enclosure machining required

● = kept in stock

402.5 x 310 x 110 mm

CA-450
Aluminium enclosure

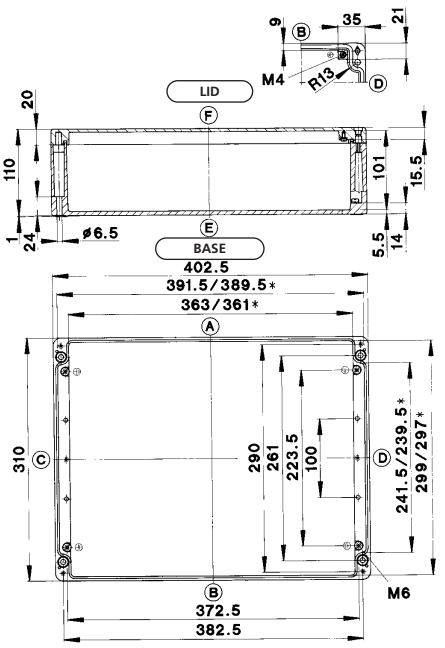

* minimum dimensions at level of mounting plate support

Type	CA-450
Weight (g)	5810
External dimensions (mm)	402.5 x 310 x 110
Complete enclosures	**Part number**
Coated, with gasket and lid screws	**145.0.0000.00** ●
Coated, with gasket and hex. socket head screws	**145.0.0010.00**
Coated, with silicone gasket and lid screws	**145.0.0520.00**
Coated, with HF gasket and lid screws	**145.0.0080.00**
Saltwater-proof coating, with gasket and lid screws	**145.0.0100.00**
Saltwater-proof coating, passivated, lid screws with gasket	**145.0.0060.00**
Unwashed, unpainted, no accessories	**145.0.0250.00**
Accessories (separate or as a mounting set)	
Mounting plate	**951.1.0200.00** ●
TS 15 mounting rail	–
TS 32 mounting rail	**982.1.0140.00** ●
TS 35 mounting rail	**982.2.0170.00** ●
Grounding rail	**981.0.0150.00** ●
External attachment brackets	**982.4.0230.00** ●
External hinges side	**980.1.0470.00** ●
Internal hinges with lid guiding**	**980.1.0300.00** ●
Silicone gasket for wider temperature range (piece goods)	**923.1.0090.00** ●

ISO M	12	16	20	25	32	40	50	63
Side A/B	80	38	27	17	11	6	5	4
Side C/D	38	21	13	7	5	4	3	2

** mechanical enclosure machining required

● = kept in stock

402.5 x 310 x 180 mm

CA-460
Aluminium enclosure

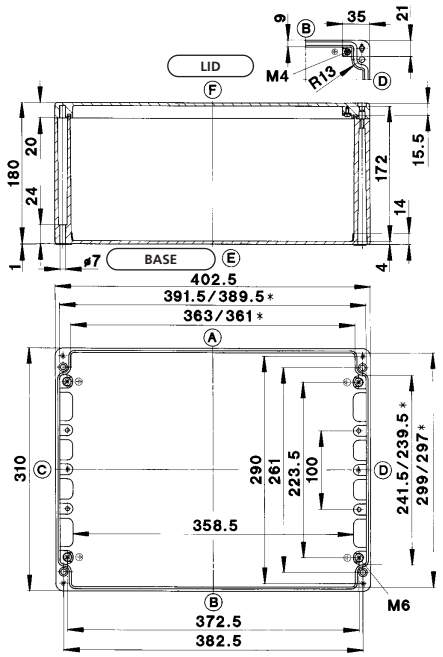

* minimum dimensions at level of mounting plate support

CA-460
7420
402.5 x 310 x 180
Part number
146.0.0000.00 ●
146.0.0010.00
146.0.0130.00
146.0.0080.00
146.0.0100.00
146.0.0060.00
146.0.0490.00
951.1.0200.00 ●
–
982.1.0140.00 ●
982.2.0170.00 ●
981.0.0150.00 ●
982.4.0230.00 ●
980.1.0470.00 ●
980.1.0300.00 ●
923.1.0090.00 ●

ISO M	12	16	20	25	32	40	50	63
Side A/B	136	68	50	30	21	12	10	8
Side C/D	74	38	28	18	12	8	6	3

** mechanical enclosure machining required

● = kept in stock

600 x 310 x 110 mm

CA-470
Aluminium enclosure

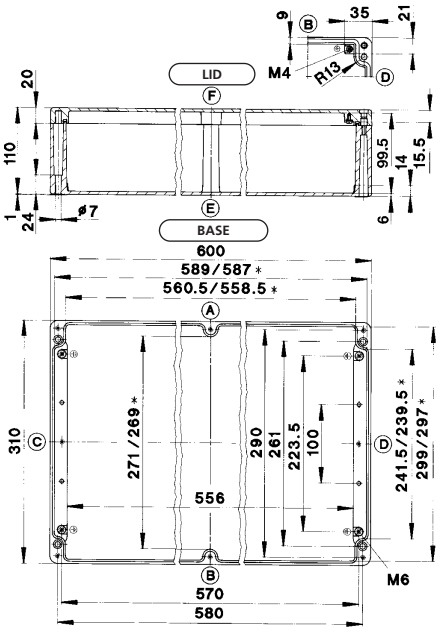

* minimum dimensions at level of mounting plate support

CA-470
8480
600 x 310 x 110
Part number
147.0.0000.00 ●
147.0.0010.00
147.0.0560.00
147.0.0080.00
147.0.0100.00
147.0.0060.00
147.0.0620.00
951.1.0210.00 ●
–
982.1.0160.00 ●
982.2.0190.00 ●
981.0.0170.00 ●
982.4.0230.00 ●
980.1.0470.00 ●
980.1.0300.00 ●
923.1.0090.00 ●

ISO M	12	16	20	25	32	40	50	63
Side A/B	120	56	42	24	16	8	8	6
Side C/D	38	17	13	7	5	4	3	2

** mechanical enclosure machining required

● = kept in stock

600 x 310 x 180 mm

CA-480
Aluminium enclosure

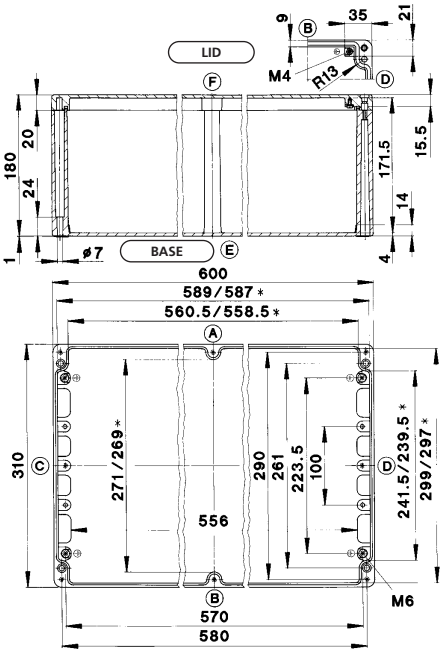

* minimum dimensions at level of mounting plate support

CA-480
10840
600 x 310 x 180
Part number
148.0.0000.00 ●
148.0.0010.00
148.0.0450.00
148.0.0080.00
148.0.0100.00
148.0.0060.00
148.0.0170.00
951.1.0210.00 ●
–
982.1.0160.00 ●
982.2.0190.00 ●
981.0.0170.00 ●
982.4.0230.00 ●
980.1.0470.00 ●
980.1.0300.00 ●
923.1.0090.00 ●

ISO M	12	16	20	25	32	40	50	63
Side A/B	200	100	76	46	30	18	14	12
Side C/D	74	38	28	18	12	8	6	5

** mechanical enclosure machining required

● = kept in stock