# Aluminium enclosures
# CA series

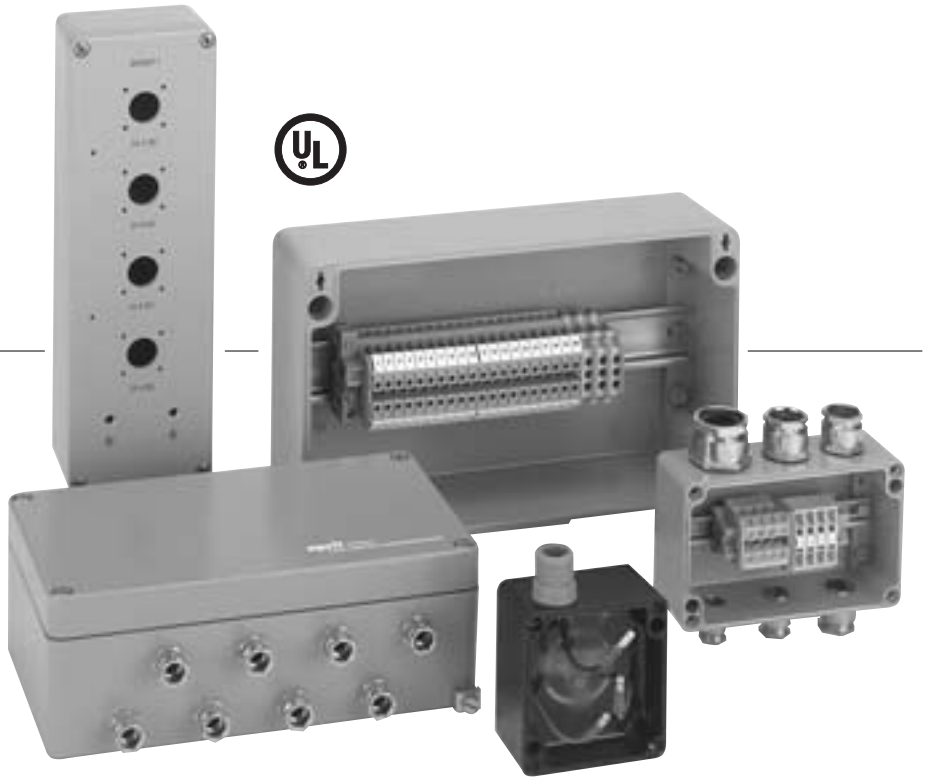

BERNSTEIN aluminium enclosures are ideally suited to housing electrical, electronic or pneumatic components. Their high mechanical strength ensures excellent protection against impact and all sizes are sealed to IP 65, according to IEC 529.

BERNSTEIN aluminium enclosures are fitted with copper earthing screws (M4 or M6) in both the base and lid, the surface below the screws is unpainted allowing a good earth connection to be made. The captive lid screws are made of stainless steel and are held in place by a lock integrated in the lid. A gasket (for standard enclosures) is factory-fitted, and ensures conformance with the protection class. BERNSTEIN aluminium enclosures are surface-coated in RAL 7001 (silver-grey), as standard.

BERNSTEIN aluminium enclosures are either die-cast or chill-cast. The dimension table shows the production method used for each respective enclosure.

Attachment points inside the enclosure can be used to hold equipment in place (mounting rail, mounting plate, printed circuit board etc.). Alternatively, the earthing points may be used. These inner attachment points are situated at different heights and positions. (Refer to the illustrations for detailed positions.)

**Technical data**

Material
Die-cast aluminium or AlSi 12 (Cu) chill-cast

Gasket
Neoprene round seal (siliconised)
alternative:
Neoprene round seal
(silicone-free)
Silicone round seal

Lid screws
Stainless steel, captive, multi-purpose cross head
alternative:
– Stainless steel quarter turn quick release (die-cast types only)
– Stainless steel hexagonal socket head screws
– Lead-sealed steel lid screws (9 S 20 K), slotted head

Coating
RAL 7001 (silver-grey)
alternative:
– Special RAL colours
– Special coatings

Temperature range
-40 °C to +80 °C (neoprene gasket)
alternative:
-50 °C to +130 °C (silicone gasket)
or -30 °C to +100 °C
(explosion-hazardous area)

Protection class
IP 65
alternative:
higher protection class by request

Approval
German Lloyd: No. 91 187 - 84HH

UL: File E 168772 (N)

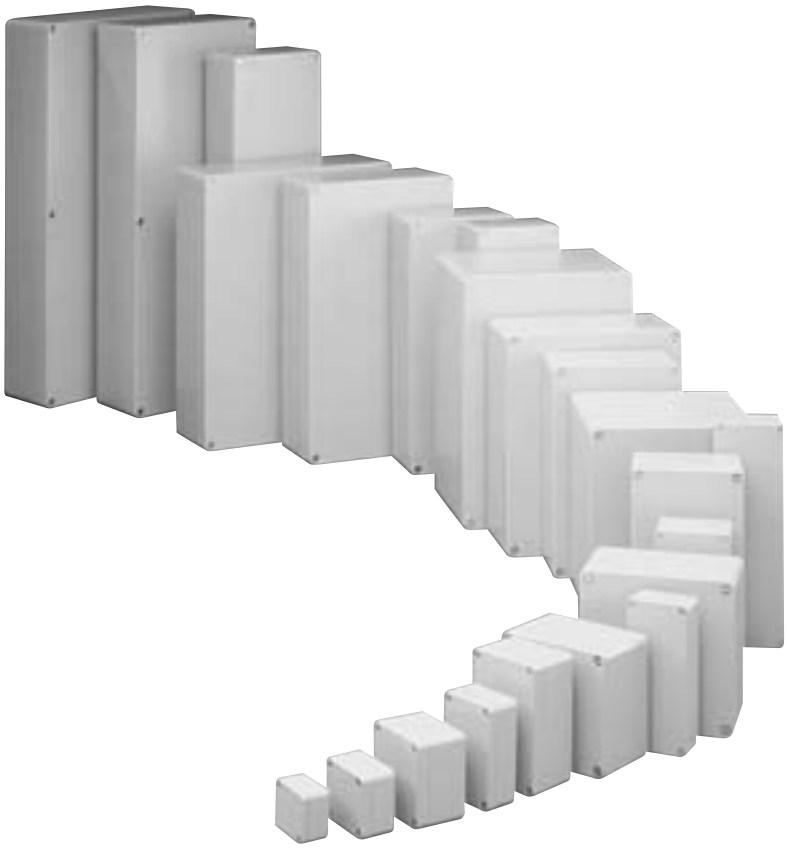

# Accessories for aluminium enclosures

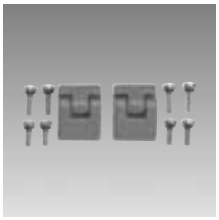

**External hinges**
For hinged attachment of the enclosure lid. Swivelling angle of lid approx. 155°. Aluminium casting, RAL 7001 coating. Machining required to fit.
Drill template is supplied.



**Mounting plates**
Galvanised sheet steel (thickness: CA-060 to CA-310, CA-350 to CA-400: 1.5 mm; CA-330, CA-420 to CA-480: 2.5 mm) allows mounting of additional equipment.

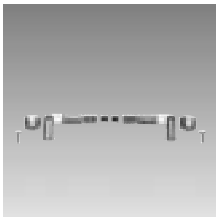

**Internal hinges**
For hinged attachment of the enclosure lid. Swivelling angle of lid approx. 95°. Made of stainless steel. Machining required to fit.



**Silicone lid gasket**
Improved temperature range (-50 °C to +130 °C). Standard type made of silicone foam.

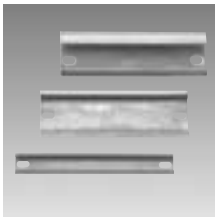

**Mounting rails**
Standard rails TS-15, TS-32 or TS-35 (steel), yellow-passivated for attachment of terminal blocks.



**Earthing rails**
Galvanised steel for connecting and routing of protective earth connection.

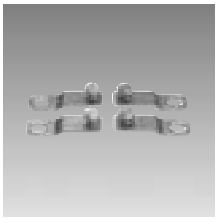

**External attachment brackets**
Stainless steel for mounting enclosures without opening the lid.
Can be mounted in 90° steps at the base of the enclosure.

## Aluminium enclosures – product line

| Dimensions/mm L x **W** x H | Aluminium enclosures Part number | Type | Cast type dc = die casting cc = chilled casting |
|---|---|---|---|
| 50 x **45** x 30 | 102.0.0000.00 | CA-020 | dc |
| 58 x **64** x 36 | 106.0.0000.00 | CA-060 | dc |
| 98 x **64** x 36 | 108.0.0000.00 | CA-080 | dc |
| 150 x **64** x 36 | 110.0.0000.00 | CA-100 | dc |
| 75 x **80** x 57 | 113.0.0000.00 | CA-130 | dc |
| 75 x **80** x 57 | 114.0.0000.00 | CA-140 | dc |
| 125 x **80** x 57 | 115.0.0000.00 | CA-150 | dc |
| 125 x **80** x 57 | 116.0.0000.00 | CA-160 | dc |
| 175 x **80** x 57 | 117.0.0000.00 | CA-170 | dc |
| 175 x **80** x 57 | 118.0.0000.00 | CA-180 | dc |
| 250 x **80** x 57 | 119.0.0000.00 | CA-190 | dc |
| 122 x **122** x 80 | 121.0.0000.00 | CA-210 | dc |
| 122 x **122** x 90 | 121.0.0000.50 | CA-215 | dc |
| 122 x **122** x 80 | 122.0.0000.00 | CA-220 | dc |
| 220 x **122** x 80 | 123.0.0000.00 | CA-230 | dc |
| 220 x **122** x 90 | 123.0.0000.50 | CA-235 | dc |
| 220 x **122** x 80 | 124.0.0000.00 | CA-240 | dc |
| 360 x **122** x 80 | 125.0.0000.00 | CA-250 | dc |
| 160 x **160** x 90 | 127.0.0000.00 | CA-270 | dc |
| 160 x **160** x 90 | 128.0.0000.00 | CA-280 | dc |
| 260 x **160** x 90 | 129.0.0000.00 | CA-290 | dc |
| 260 x **160** x 90 | 130.0.0000.00 | CA-300 | dc |
| 360 x **160** x 90 | 131.0.0000.00 | CA-310 | dc |
| 560 x **160** x 90 | 133.0.0000.00 | CA-330 | cc |
| 200 x **230** x 110 | 135.0.0000.00 | CA-350 | dc |
| 200 x **230** x 180 | 136.0.0000.00 | CA-360 | cc |
| 280 x **230** x 110 | 137.0.0000.00 | CA-370 | dc |
| 330 x **230** x 110 | 138.0.0000.00 | CA-380 | dc |
| 330 x **230** x 180 | 139.0.0000.00 | CA-390 | cc |
| 401 x **230** x 110 | 140.0.0000.00 | CA-400 | dc |
| 600 x **230** x 110 | 142.0.0000.00 | CA-420 | cc |
| 402 x **310** x 110 | 145.0.0000.00 | CA-450 | dc |
| 402 x **310** x 180 | 146.0.0000.00 | CA-460 | cc |
| 600 x **310** x 110 | 147.0.0000.00 | CA-470 | cc |
| 600 x **310** x 180 | 148.0.0000.00 | CA-480 | cc |

# Component overview for aluminium enclosures CA series

*) Assembled on 2 mounting rails
**) Assembled on 3 mounting rails
The number of terminals is reduced when partitions are used.

| Model | | Weidmüller | | | | Phoenix | | | Wieland | | | | Entrelec | | | | | | | Phoenix | | | | | | |
|---|---|---|---|---|---|---|---|---|---|---|---|---|---|---|---|---|---|---|---|---|---|---|---|---|---|---|
| | | Block terminal | | | | Block terminal | | | Block terminal | | | | Terminal block | | | | | | | Terminal block | | | | | | |
| Terminal width (mm): | | | | | | | | | | | | | 5.2 | 6.2 | 5.2 | 6.2 | 8.2 | 10.2 | 12.2 | 5.2 | 6.2 | 7.5 | 5.2 | 6.2 | 8.2 | 10.2 |
| Single core | mm² | 4 | 4 | 4 | 2.5 | 4 | 4 | 4 | 2.5 | 2.5 | 2.5 | 2.5 | 2.5 | 4 | 4 | 4 | 10 | 16 | 25 | 2.5 | 4 | 10 | 4 | 4 | 10 | 16 |
| Stranded | mm² | 4 | 4 | 4 | 2.5 | 4 | 4 | 4 | 2.5 | 2.5 | 2.5 | 2.5 | 1.5 | 4 | 2.5 | 4 | 6 | 10 | 16 | 1.5 | 4 | 6 | 2.5 | 4 | 6 | 10 |
| Nominal voltage | V | 380 | 380 | 380 | 380 | 500 | 500 | 500 | 500 | 500 | 500 | 500 | 250 | 380 | 750 | 750 | 750 | 750 | 750 | 500 | 500 | 500 | 750 | 750 | 750 | 750 |
| Loading capacityt | A | 36 | 36 | 36 | 25 | 36 | 36 | 36 | 25 | 25 | 25 | 25 | 20 | 35 | 26 | 35 | 46 | 63 | 85 | 27 | 36 | 65 | 36 | 36 | 65 | 87 |
| Terminal bridging | | – | – | – | – | – | – | – | – | – | – | – | – | ○ | ○ | ○ | ○ | ○ | ○ | – | ○ | – | ○ | ○ | ○ | ○ |
| Mounting rail | TS 15 | – | – | – | – | – | – | – | – | – | – | – | ○ | ○ | – | ○ | – | – | – | ○ | ○ | ○ | – | – | – | – |
| | TS 32 | ○ | – | – | – | – | – | – | – | – | – | – | – | – | ○ | ○ | ○ | ○ | ○ | – | – | – | ○ | ○ | ○ | ○ |
| | TS 35 | ○ | – | – | – | – | – | – | – | – | – | – | – | – | ○ | ○ | ○ | ○ | ○ | – | – | – | ○ | ○ | ○ | ○ |
| Part number | | **9.40.1.0100.00** | **9.40.1.0090.00** | **9.40.1.0130.00** | **9.40.1.0010.00** | **9.40.1.0020.00** | **9.40.1.0030.00** | **9.40.1.0040.00** | **9.40.1.0050.00** | **9.40.1.0060.00** | **9.40.1.0070.00** | **9.40.1.0080.00** | **9.40.2.1270.00** | **9.40.2.0940.00** | **9.40.2.1090.00** | **9.40.2.1030.00** | **9.40.2.1040.00** | **9.40.2.1050.00** | **9.40.2.1060.00** | **9.40.2.0010.00** | **9.40.2.0020.00** | **9.40.2.0030.00** | **9.40.2.0050.00** | **9.40.2.0070.00** | **9.40.2.0090.00** | **9.40.2.0110.00** |
| Type | | BK 4 | BK 6 | BK 12 | MK 3/4 | G 5/4 | G 5/6 | G 5/12 | KL-16/8 | KL-16/12 | KL-16/16 | KL-16/20 | DR 1.5/5 | DR 4/6 | MA 2.5/5 | M 4/6 | M 6/8 | M 10/10 | M 16/12 | MBK | MBK 5/E | MBK 10 | UK 3 N | UK 5 N | UK 10 | UK 16 |
| CA-020 | | – | – | – | 1 | – | – | – | – | – | – | – | – | – | – | 1 | – | – | – | – | – | – | 1 | – | – | – |
| CA-060 | | 1 | – | – | – | 1 | – | – | – | – | – | – | 4 | – | – | – | – | – | – | 4 | – | – | – | – | – | – |
| CA-080 | | – | 1 | – | – | – | 1 | – | 1 | 1 | – | – | 10 | – | – | – | – | – | – | 12 | – | – | – | – | – | – |
| CA-100 | | – | – | 1 | – | – | – | 1 | – | – | 1 | 1 | 20 | – | – | – | – | – | – | 20 | – | – | – | – | – | – |
| CA-130 | | 1 | 1 | – | – | 1 | 1 | – | 1 | – | – | – | 6 | 4 | – | – | – | – | – | 6 | 4 | – | – | – | – | – |
| CA-140 | | 1 | 1 | – | – | 1 | 1 | – | 1 | – | – | – | 6 | 4 | – | – | – | – | – | 6 | 4 | 4 | – | – | – | – |
| CA-150 | | – | 1 | 1 | – | – | 1 | 1 | 1 | – | – | – | 16 | 13 | – | – | – | – | – | 16 | 13 | – | – | – | – | – |
| CA-160 | | – | 1 | 1 | – | – | 1 | 1 | 1 | – | – | – | 16 | 13 | – | – | – | – | – | 16 | 13 | 10 | – | – | – | – |
| CA-170 | | – | – | 1 | – | – | – | – | – | – | 1 | – | 26 | 21 | – | – | – | – | – | 26 | 21 | – | – | – | – | – |
| CA-180 | | – | – | 1 | – | – | – | 1 | – | – | 1 | – | 26 | 21 | – | – | – | – | – | 26 | 21 | 17 | – | – | – | – |
| CA-190 | | – | – | 2 | – | – | – | 2 | – | 2 | – | – | 39 | 33 | – | – | – | – | – | 39 | 33 | 27 | – | – | – | – |
| CA-210/215/220 | | – | – | – | – | – | – | – | – | – | – | – | – | – | 12 | 10 | 8 | 6 | 5 | – | – | – | 12 | 10 | 8 | 6 |
| CA-230/235/240 | | – | – | – | – | – | – | – | – | – | – | – | – | – | 31 | 26 | 19 | 15 | 13 | – | – | – | 31 | 26 | 19 | 15 |
| CA-250 | | – | – | – | – | – | – | – | – | – | – | – | – | – | 58 | 49 | 37 | 29 | 24 | – | – | – | 58 | 49 | 37 | 29 |
| CA-270/280 | | – | – | – | – | – | – | – | – | – | – | – | – | – | 19 | 16 | 12 | 9 | 8 | – | – | – | 19 | 16 | 12 | 9 |
| CA-290/300 | | – | – | – | – | – | – | – | – | – | – | – | – | – | 38 | 32 | 24 | 19 | 16 | – | – | – | 38 | 32 | 24 | 19 |
| CA-310 | | – | – | – | – | – | – | – | – | – | – | – | – | – | 57 | 48 | 36 | 29 | 24 | – | – | – | 57 | 48 | 36 | 29 |
| CA-330 | | – | – | – | – | – | – | – | – | – | – | – | – | – | 96 | 80 | 61 | 48 | 40 | – | – | – | 96 | 80 | 61 | 48 |
| CA-350 | | – | – | – | – | – | – | – | – | – | – | – | – | – | 27 | 22 | 17 | 13 | 11 | – | – | – | 27 | 22 | 17 | 13 |
| CA-350*) | | – | – | – | – | – | – | – | – | – | – | – | – | – | 54 | 44 | 34 | 26 | – | – | – | – | 54 | 44 | 34 | 26 |
| CA-360 | | – | – | – | – | – | – | – | – | – | – | – | – | – | 27 | 22 | 17 | 13 | 11 | – | – | – | 27 | 22 | 17 | 13 |
| CA-360*) | | – | – | – | – | – | – | – | – | – | – | – | – | – | 54 | 44 | 34 | 26 | – | – | – | – | 54 | 44 | 34 | – |
| CA-370 | | – | – | – | – | – | – | – | – | – | – | – | – | – | 42 | 35 | 27 | 21 | 18 | – | – | – | 42 | 35 | 27 | 21 |
| CA-370*) | | – | – | – | – | – | – | – | – | – | – | – | – | – | 84 | 70 | 54 | 42 | – | – | – | – | 84 | 70 | 54 | 42 |
| CA-380 | | – | – | – | – | – | – | – | – | – | – | – | – | – | 52 | 43 | 33 | 26 | 22 | – | – | – | 52 | 43 | 33 | 26 |
| CA-380*) | | – | – | – | – | – | – | – | – | – | – | – | – | – | 104 | 86 | 66 | 52 | – | – | – | – | 104 | 86 | 66 | 52 |
| CA-390 | | – | – | – | – | – | – | – | – | – | – | – | – | – | 52 | 43 | 33 | 26 | 22 | – | – | – | 52 | 43 | 33 | 26 |
| CA-390*) | | – | – | – | – | – | – | – | – | – | – | – | – | – | 104 | 86 | 66 | 52 | – | – | – | – | 104 | 86 | 66 | 52 |
| CA-400 | | – | – | – | – | – | – | – | – | – | – | – | – | – | 66 | 55 | 41 | 33 | 27 | – | – | – | 66 | 55 | 41 | 33 |
| CA-400*) | | – | – | – | – | – | – | – | – | – | – | – | – | – | 132 | 110 | 82 | 66 | – | – | – | – | 132 | 110 | 82 | 66 |
| CA-420 | | – | – | – | – | – | – | – | – | – | – | – | – | – | 104 | 87 | 65 | 53 | 44 | – | – | – | 104 | 87 | 65 | 53 |
| CA-420*) | | – | – | – | – | – | – | – | – | – | – | – | – | – | 208 | 174 | 130 | 106 | – | – | – | – | 208 | 174 | 130 | 106 |
| CA-450 | | – | – | – | – | – | – | – | – | – | – | – | – | – | 65 | 55 | 41 | 33 | 28 | – | – | – | 65 | 55 | 41 | 33 |
| CA-450*) | | – | – | – | – | – | – | – | – | – | – | – | – | – | 130 | 110 | 82 | 66 | 56 | – | – | – | 130 | 110 | 82 | 66 |
| CA-450**) | | – | – | – | – | – | – | – | – | – | – | – | – | – | 195 | 165 | 123 | 99 | – | – | – | – | 195 | 165 | 123 | 99 |
| CA-460 | | – | – | – | – | – | – | – | – | – | – | – | – | – | 65 | 55 | 41 | 33 | 28 | – | – | – | 65 | 55 | 41 | 33 |
| CA-460*) | | – | – | – | – | – | – | – | – | – | – | – | – | – | 130 | 110 | 82 | 66 | 56 | – | – | – | 130 | 110 | 82 | 66 |
| CA-460**) | | – | – | – | – | – | – | – | – | – | – | – | – | – | 195 | 165 | 123 | 99 | – | – | – | – | 195 | 165 | 123 | 99 |
| CA-470 | | – | – | – | – | – | – | – | – | – | – | – | – | – | 104 | 87 | 65 | 53 | 44 | – | – | – | 104 | 87 | 65 | 53 |
| CA-470*) | | – | – | – | – | – | – | – | – | – | – | – | – | – | 208 | 174 | 130 | 106 | 88 | – | – | – | 208 | 174 | 130 | 106 |
| CA-470**) | | – | – | – | – | – | – | – | – | – | – | – | – | – | 312 | 261 | 195 | 159 | – | – | – | – | 312 | 261 | 195 | 159 |
| CA-480 | | – | – | – | – | – | – | – | – | – | – | – | – | – | 104 | 87 | 65 | 53 | 44 | – | – | – | 104 | 87 | 65 | 53 |
| CA-480*) | | – | – | – | – | – | – | – | – | – | – | – | – | – | 208 | 174 | 130 | 106 | 88 | – | – | – | 208 | 174 | 130 | 106 |
| CA-480**) | | – | – | – | – | – | – | – | – | – | – | – | – | – | 312 | 261 | 195 | 159 | – | – | – | – | 312 | 261 | 195 | 159 |

| | Siemens | | | | | | | WAGO | | | | | | | | | | | | Weidmüller | | | | | | | | |
|---|---|---|---|---|---|---|---|---|---|---|---|---|---|---|---|---|---|---|---|---|---|---|---|---|---|---|---|---|
| | Terminal block | | | | Terminal block | | | Terminal block | | | | | | | | | | | | Terminal block | | | | | | | | |
| | Screw terminals | | | | Caged tension spring | | | 6.2 | 10.2 | 6.2 | 10.2 | 4.2 | 5.2 | 5.2 | 6.2 | 6.2 | 8.2 | 10.2 | 12.2 | 5.2 | 6.2 | 6.2 | 6.5 | 8.2 | 10.2 | 12.2 | 5.2 | 6.2 |
| | 4 | 4 | 10 | 25 | 4 | 4 | 10 | 2.5 | 2.5 | 2.5 | 2.5 | 1.5 | 2.5 | 2.5 | 4 | 4 | 6 | 10 | 16 | 2.5 | 4 | 4 | 6 | 10 | 16 | 25 | 4 | 6 |
| | 2.5 | 4 | 6 | 16 | 2.5 | 4 | 6 | 2.5 | 2.5 | 2.5 | 2.5 | 1.5 | 2.5 | 2.5 | 4 | 4 | 6 | 10 | 16 | 1.5 | 4 | 2.5 | 4 | 6 | 10 | 15 | 2.5 | 4 |
| | 750 | 750 | 750 | 750 | 750 | 750 | 750 | 800 | 800 | 800 | 800 | 800 | 800 | 800 | 800 | 800 | 800 | 800 | 800 | 250 | 380 | 750 | 750 | 750 | 750 | 750 | 750 | 750 |
| | 26 | 35 | 46 | 85 | 36 | 36 | 65 | 26 | 26 | 26 | 26 | 18 | 26 | 26 | 34 | 34 | 44 | 61 | 82 | 27 | 36 | 27 | 36 | 47 | 65 | 87 | 26 | 34 |
| | ○ | ○ | ○ | ○ | ○ | ○ | ○ | ○ | ○ | ○ | ○ | ○ | ○ | ○ | ○ | ○ | ○ | ○ | ○ | ○ | ○ | ○ | ○ | ○ | ○ | ○ | ○ | ○ |
| | – | ○ | – | – | – | – | – | ○ | ○ | – | – | – | – | – | – | – | – | – | – | ○ | ○ | ○ | – | – | – | – | – | – |
| | – | – | – | – | – | – | – | – | – | – | – | – | – | – | – | – | – | – | – | – | – | – | ○ | ○ | ○ | ○ | – | – |
| | ○ | ○ | ○ | ○ | ○ | ○ | ○ | – | – | ○ | ○ | ○ | ○ | ○ | ○ | ○ | ○ | ○ | ○ | – | – | – | – | – | – | – | ○ | ○ |
| | **9.40.2.4000.00** | **9.40.2.4010.00** | **9.40.2.4020.00** | **9.40.2.4030.00** | **9.40.2.4040.00** | **9.40.2.4050.00** | **9.40.2.4060.00** | **9.40.2.3020.00** | **9.40.2.3030.00** | **9.40.2.3210.00** | **9.40.2.3220.00** | **9.40.2.3230.00** | **9.40.2.0930.00** | **9.40.2.3240.00** | **9.40.2.3250.00** | **9.40.2.3260.00** | **9.40.2.3270.00** | **9.40.2.3280.00** | **9.40.2.3290.00** | **9.40.2.0500.00** | **9.40.2.0130.00** | **9.40.2.0140.00** | **9.40.2.0150.00** | **9.40.2.0160.00** | **9.40.2.0470.00** | **9.40.2.0170.00** | **9.40.2.1460.00** | **9.40.2.1470.00** |
| | 8WA1011-1DF11 | 8WA1011-1DG11 | 8WA1011-1DH11 | 8WA1204 | 8WA2011-1DF20 | 8WA2011-1DG20 | 8WA2011-1DH20 | 264-701 | 264-721 | 264-711 | 264-731 | 279-621 | 280-601 | 280-901 | 281-601 | 281-901 | 282-601 | 284-601 | 283-601 | AKZ 2.5 PA | AKZ 4 PA | SAK 2.5 PA | SAK 4 PA | SAK 6 NPA | SAK 10 PA | SAK 16 PA | WDU 2.5 | WDU 4 |
| | – | – | – | – | – | – | – | – | – | – | – | – | – | – | – | – | – | – | – | – | – | – | – | – | – | – | – | – |
| | – | – | – | – | – | – | – | – | – | – | – | – | – | – | – | – | – | – | – | – | – | – | – | – | – | – | – | – |
| | – | – | – | – | – | – | – | – | – | – | – | – | – | – | – | – | – | – | – | – | – | – | – | – | – | – | – | – |
| | – | – | – | – | – | – | – | – | – | – | – | – | – | – | – | – | – | – | – | – | – | – | – | – | – | – | – | – |
| | – | – | – | – | – | – | – | 5 | 3 | – | – | – | – | – | – | – | – | – | – | 6 | 4 | – | – | – | – | – | – | – |
| | – | – | – | – | – | – | – | 5 | 3 | – | – | – | – | – | – | – | – | – | – | 6 | 4 | – | – | – | – | – | – | – |
| | – | – | – | – | – | – | – | 13 | 8 | – | – | – | – | – | – | – | – | – | – | 16 | 12 | – | – | – | – | – | – | – |
| | – | – | – | – | – | – | – | 13 | 8 | – | – | – | – | – | – | – | – | – | – | 16 | 12 | – | – | – | – | – | – | – |
| | – | – | – | – | – | – | – | 21 | 13 | – | – | – | – | – | – | – | – | – | – | 26 | 20 | – | – | – | – | – | – | – |
| | – | – | – | – | – | – | – | 21 | 13 | – | – | – | – | – | – | – | – | – | – | 26 | 20 | – | – | – | – | – | – | – |
| | – | – | – | – | – | – | – | 34 | 20 | – | – | – | – | – | – | – | – | – | – | 41 | 33 | – | – | – | – | – | – | – |
| | 10 | 10 | 8 | 6 | 12 | 10 | 8 | – | – | 12 | 7 | 18 | – | – | – | – | – | – | – | – | – | 10 | 9 | 7 | 6 | 5 | 12 | 10 |
| | 27 | 25 | 20 | 16 | 31 | 26 | 20 | – | – | 28 | 17 | 43 | – | – | – | – | – | – | – | – | – | 26 | 24 | 20 | 15 | 12 | 31 | 26 |
| | 50 | 46 | 37 | 30 | 58 | 49 | 37 | – | – | 51 | 31 | 43 | – | – | – | – | – | – | – | – | – | 48 | 45 | 37 | 29 | 24 | 58 | 48 |
| | 16 | 15 | 12 | 9 | 19 | 16 | 12 | – | – | 10 | 17 | 25 | 20 | 20 | 17 | 17 | 12 | 10 | 8 | – | – | 16 | 15 | 12 | 9 | 8 | 19 | 16 |
| | 32 | 30 | 24 | 19 | 38 | 32 | 24 | – | – | 33 | 20 | 50 | 40 | 40 | 33 | 33 | 25 | 20 | 16 | – | – | 33 | 30 | 25 | 19 | 16 | 38 | 32 |
| | 49 | 45 | 37 | 29 | 57 | 48 | 36 | – | – | 50 | 30 | 76 | 60 | 60 | 50 | 50 | 37 | 30 | 28 | – | – | 48 | 45 | 36 | 29 | 24 | 57 | 48 |
| | 83 | 76 | 62 | 49 | 96 | 80 | 60 | – | – | 83 | 50 | 125 | 100 | 100 | 83 | 83 | 62 | 50 | 41 | – | – | 86 | 74 | 61 | 48 | 40 | 96 | 80 |
| | 22 | 21 | 17 | 13 | 26 | 22 | 17 | – | – | 23 | 14 | 35 | 28 | 28 | 23 | 23 | 17 | 14 | 11 | – | – | 22 | 20 | 17 | 13 | 11 | 26 | 22 |
| | 44 | 42 | 34 | 26 | 52 | 44 | 34 | – | – | 46 | 28 | 70 | 56 | 56 | 46 | 46 | 34 | 28 | – | – | – | 44 | 40 | 34 | 26 | – | 52 | 44 |
| | 22 | 20 | 17 | 13 | 26 | 22 | 10 | – | – | 23 | 14 | 35 | 28 | 28 | 23 | 23 | 17 | 14 | 11 | – | – | 22 | 20 | 17 | 13 | 11 | 26 | 22 |
| | 44 | 40 | 34 | 26 | 52 | 49 | 32 | – | – | 46 | 28 | 70 | 56 | 56 | 46 | 46 | 34 | 28 | – | – | – | 44 | 40 | 34 | 26 | – | 52 | 44 |
| | 36 | 33 | 27 | 21 | 42 | 35 | 26 | – | – | 36 | 22 | 55 | 44 | 44 | 37 | 37 | 27 | 22 | 18 | – | – | 35 | 32 | 26 | 21 | 18 | 42 | 35 |
| | 72 | 66 | 54 | 42 | 84 | 70 | 52 | – | – | 72 | 44 | 110 | 88 | 88 | 74 | 74 | 54 | 44 | – | – | – | 70 | 64 | 52 | 42 | – | 84 | 70 |
| | 44 | 51 | 33 | 26 | 51 | 43 | 32 | – | – | 45 | 27 | 68 | 54 | 54 | 45 | 45 | 33 | 27 | 22 | – | – | 43 | 40 | 32 | 26 | 22 | 51 | 43 |
| | 88 | 82 | 66 | 52 | 102 | 86 | 64 | – | – | 90 | 54 | 136 | 108 | 108 | 90 | 90 | 66 | 54 | – | – | – | 86 | 86 | 64 | 52 | – | 102 | 86 |
| | 44 | 40 | 33 | 26 | 51 | 43 | 32 | – | – | 45 | 27 | 68 | 54 | 54 | 45 | 45 | 33 | 27 | 22 | – | – | 43 | 40 | 32 | 26 | 22 | 51 | 43 |
| | 88 | 80 | 66 | 52 | 102 | 86 | 64 | – | – | 90 | 54 | 136 | 108 | 108 | 90 | 90 | 66 | 54 | – | – | – | 86 | 86 | 64 | 52 | – | 102 | 86 |
| | 56 | 52 | 42 | 33 | 65 | 54 | 41 | – | – | 57 | 34 | 86 | 68 | 68 | 57 | 57 | 42 | 34 | 28 | – | – | 54 | 50 | 41 | 33 | 27 | 65 | 54 |
| | 112 | 104 | 84 | 66 | 130 | 108 | 82 | – | – | 114 | 68 | 172 | 136 | 136 | 114 | 114 | 84 | 68 | – | – | – | 108 | 100 | – | 66 | – | 130 | 108 |
| | 89 | 82 | 67 | 53 | 103 | 86 | 65 | – | – | 90 | 54 | 135 | 108 | 108 | 90 | 90 | 67 | 54 | 45 | – | – | 87 | 80 | 65 | 52 | 44 | 103 | 86 |
| | 178 | 164 | 134 | 106 | 206 | 172 | 130 | – | – | 180 | 108 | 270 | 216 | 216 | 180 | 180 | 134 | 108 | – | – | – | 174 | 160 | – | 104 | – | 206 | 172 |
| | 56 | 52 | 42 | 34 | 65 | 55 | 41 | – | – | 57 | 34 | 86 | 69 | 69 | 57 | 57 | 43 | 34 | 28 | – | – | 54 | 50 | 41 | 33 | 27 | 65 | 54 |
| | 112 | 104 | 84 | 68 | 130 | 110 | 82 | – | – | 114 | 68 | 172 | 138 | 138 | 114 | 114 | 86 | 68 | 56 | – | – | 108 | 100 | 82 | 66 | 54 | 130 | 108 |
| | 163 | 156 | 126 | 102 | 195 | 165 | 123 | – | – | 171 | 102 | 258 | 207 | 207 | 171 | 171 | 129 | 102 | – | – | – | 162 | 150 | – | 99 | – | 195 | 162 |
| | 56 | 52 | 42 | 33 | 65 | 54 | 41 | – | – | 57 | 34 | 86 | 68 | 68 | 57 | 57 | 42 | 34 | 28 | – | – | 54 | 50 | 41 | 33 | 27 | 65 | 54 |
| | 112 | 104 | 84 | 66 | 130 | 108 | 82 | – | – | 114 | 68 | 172 | 136 | 136 | 114 | 114 | 84 | 68 | 56 | – | – | 108 | 100 | 82 | 66 | 54 | 130 | 108 |
| | 163 | 156 | 126 | 99 | 195 | 162 | 123 | – | – | 171 | 102 | 258 | 204 | 204 | 171 | 171 | 126 | 102 | – | – | – | 162 | 150 | – | 99 | – | 195 | 162 |
| | 89 | 82 | 67 | 53 | 103 | 68 | 65 | – | – | 90 | 54 | 135 | 108 | 108 | 90 | 90 | 67 | 54 | 45 | – | – | 87 | 80 | 65 | 52 | 44 | 103 | 86 |
| | 178 | 164 | 134 | 106 | 206 | 172 | 130 | – | – | 180 | 108 | 270 | 216 | 216 | 180 | 180 | 134 | 108 | 90 | – | – | 174 | 160 | 130 | 104 | 88 | 206 | 172 |
| | 267 | 246 | 201 | 159 | 309 | 258 | 195 | – | – | 270 | 162 | 405 | 324 | 324 | 270 | 270 | 201 | 162 | – | – | – | 261 | 240 | – | 156 | – | 309 | 258 |
| | 89 | 82 | 67 | 53 | 103 | 86 | 65 | – | – | 90 | 54 | 135 | 108 | 108 | 90 | 90 | 67 | 54 | 45 | – | – | 87 | 80 | 65 | 52 | 44 | 103 | 86 |
| | 178 | 164 | 134 | 106 | 206 | 172 | 130 | – | – | 180 | 108 | 270 | 216 | 216 | 180 | 180 | 134 | 108 | 90 | – | – | 174 | 160 | 130 | 104 | 88 | 206 | 172 |
| | 267 | 246 | 201 | 159 | 309 | 258 | 195 | – | – | 270 | 162 | 405 | 324 | 324 | 270 | 270 | 201 | 162 | – | – | – | 261 | 240 | – | 156 | – | 309 | 258 |

## 50 x 45 x 30 mm

CA-020
Aluminium enclosure

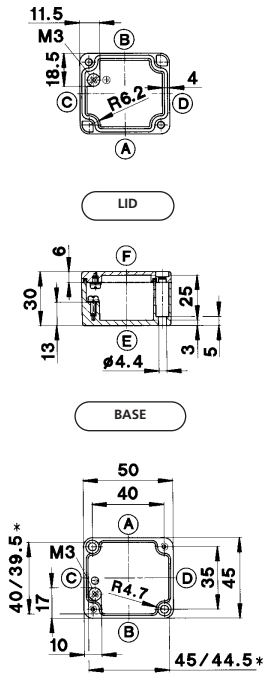


* minimum dimensions at level of mounting plate support

## 58 x 64 x 36 mm

CA-060
Aluminium enclosure

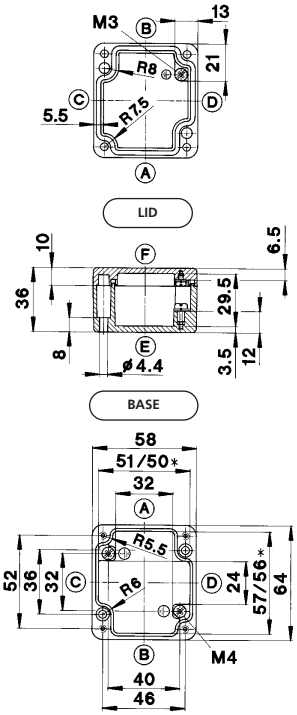


* minimum dimensions at level of mounting plate support

| Type | | CA-020 | CA-060 |
|---|---|---|---|
| Weight | (g) | 70 | 160 |
| External dimensions | (mm) | 50 x 45 x 30 | 58 x 64 x 36 |
| **Complete enclosures** | | **Part number** | **Part number** |
| Coated, with gasket and lid screws | | **102.0.0000.00** ● | **106.0.0000.00** ● |
| Coated, with gasket and hex. socket head screws | | – | – |
| Coated, with silicone gasket and lid screws | | – | **106.0.0940.00** |
| Coated, with HF gasket and lid screws | | – | **106.0.0080.00** |
| Saltwater-proof coating, with gasket and lid screws | | **102.0.0100.00** | **106.0.0100.00** |
| Saltwater-proof coating, passivated, lid screws with gasket | | **102.0.0060.00** | **106.0.0060.00** |
| Unwashed, unpainted, no accessories | | **102.0.0340.00** | **106.0.0380.00** |
| **Accessories** (separate or as a mounting set) | | | |
| Mounting plate | | – | **951.1.0010.00** ● |
| TS 15 mounting rail | | – | **982.0.0000.00** ● |
| TS 32 mounting rail | | – | – |
| TS 35 mounting rail | | – | – |
| Grounding rail | | – | – |
| External attachment brackets | | – | – |
| External hinges side | | – | – |
| Internal hinges with lid guiding** | | – | – |
| Silicone gasket for wider temperature range (piece goods) | | – | **923.1.0050.00** ● |

**Max. Pg threads**

| ISO M | 12 | 16 | 20 | 25 | 32 | 40 | 50 | 63 |
|---|---|---|---|---|---|---|---|---|
| Side A/B | 1 | 0 | 0 | 0 | 0 | 0 | 0 | 0 |
| Side C/D | 1 | 0 | 0 | 0 | 0 | 0 | 0 | 0 |

** mechanical enclosure machining required

● = kept in stock

| ISO M | 12 | 16 | 20 | 25 | 32 | 40 | 50 | 63 |
|---|---|---|---|---|---|---|---|---|
| Side A/B | 2 | 1 | 0 | 0 | 0 | 0 | 0 | 0 |
| Side C/D | 1 | 0 | 0 | 0 | 0 | 0 | 0 | 0 |

** mechanical enclosure machining required

● = kept in stock

## 98 x 64 x 36 mm

CA-080
Aluminium enclosure

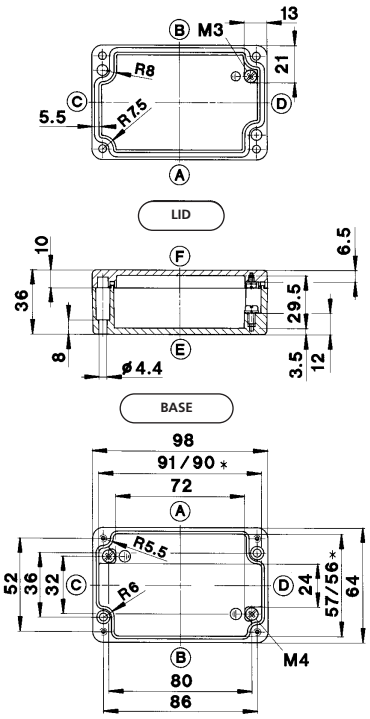


* minimum dimensions at level of mounting plate support

| CA-080 |
|---|
| 220 |
| 98 x 64 x 36 |
| **Part number** |
| **108.0.0000.00** ● |
| – |
| **108.0.0090.00** |
| **108.0.0080.00** |
| **108.0.0100.00** |
| **108.0.0060.00** |
| **108.0.0420.00** |
| |
| **951.1.0020.00** ● |
| **982.0.0050.00** ● |
| – |
| – |
| – |
| – |
| – |
| – |
| **923.1.0050.00** ● |

| ISO M | 12 | 16 | 20 | 25 | 32 | 40 | 50 | 63 |
|---|---|---|---|---|---|---|---|---|
| Side A/B | 4 | 3 | 0 | 0 | 0 | 0 | 0 | 0 |
| Side C/D | 1 | 0 | 0 | 0 | 0 | 0 | 0 | 0 |

** mechanical enclosure machining required

● = kept in stock

## 150 x 64 x 36 mm

CA-100
Aluminium enclosure

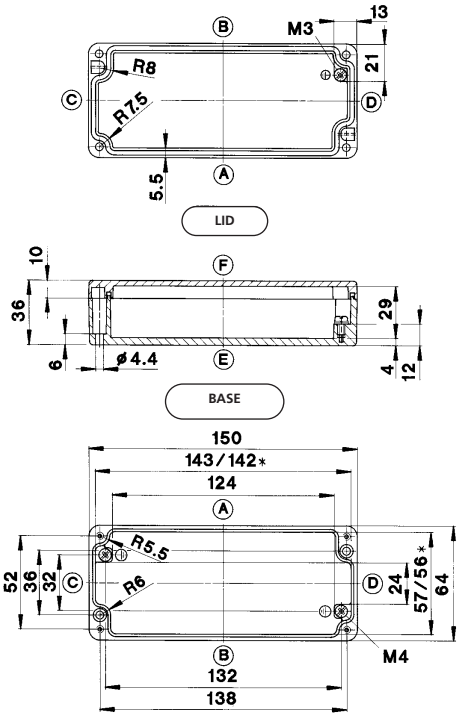


* minimum dimensions at level of mounting plate support

| CA-100 |
|---|
| 330 |
| 150 x 64 x 36 |
| **Part number** |
| **110.0.0000.00** ● |
| – |
| **110.0.0760.00** |
| **110.0.0080.00** |
| **110.0.0100.00** |
| **110.0.0060.00** |
| **110.0.0530.00** |
| |
| **951.1.0030.00** ● |
| **982.0.0110.00** ● |
| – |
| – |
| – |
| – |
| – |
| – |
| **923.1.0050.00** ● |

| ISO M | 12 | 16 | 20 | 25 | 32 | 40 | 50 | 63 |
|---|---|---|---|---|---|---|---|---|
| Side A/B | 6 | 4 | 0 | 0 | 0 | 0 | 0 | 0 |
| Side C/D | 1 | 0 | 0 | 0 | 0 | 0 | 0 | 0 |

** mechanical enclosure machining required

● = kept in stock

## 75 x 80 x 57 mm

CA-130
Aluminium enclosure

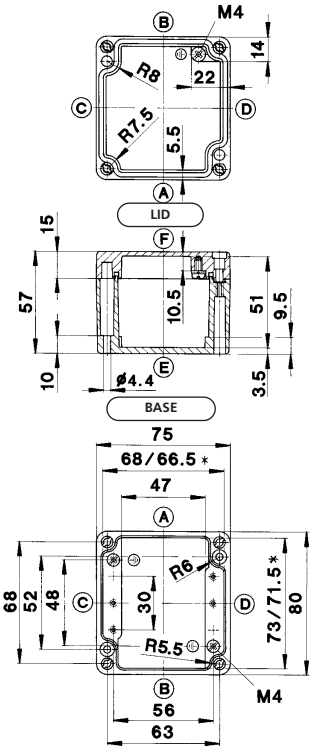


* minimum dimensions at level of mounting plate support

| CA-130 |
|---|
| 280 |
| 75 x 80 x 57 |
| **Part number** |
| **113.0.0000.00** ● |
| – |
| **113.0.0820.00** |
| **113.0.0080.00** |
| **113.0.0100.00** |
| **113.0.0060.00** |
| **113.0.0570.00** |
| |
| **982.3.0150.00** ● |
| **982.0.0020.00** ● |
| – |
| – |
| – |
| – |
| **980.1.0440.00** ● |
| – |
| **923.1.0050.00** ● |

| ISO M | 12 | 16 | 20 | 25 | 32 | 40 | 50 | 63 |
|---|---|---|---|---|---|---|---|---|
| Side A/B | 5 | 2 | 1 | 0 | 0 | 0 | 0 | 0 |
| Side C/D | 3 | 2 | 1 | 0 | 0 | 0 | 0 | 0 |

** mechanical enclosure machining required

● = kept in stock

## 75 x 80 x 57 mm

CA-140
Aluminium enclosure

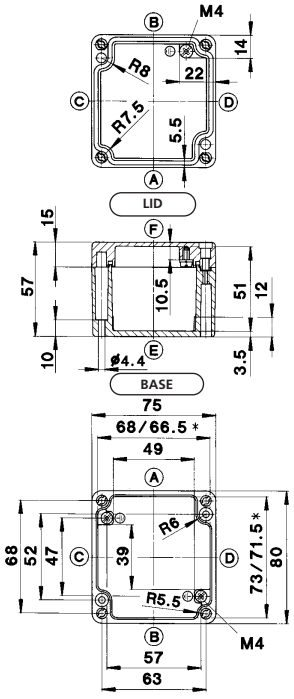


* minimum dimensions at level of mounting plate support

## 125 x 80 x 57 mm

CA-150
Aluminium enclosure

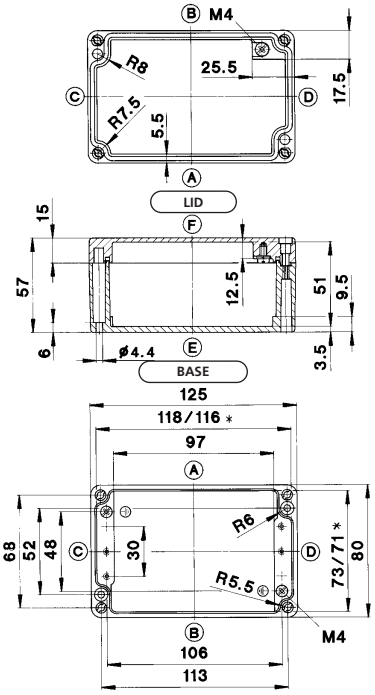


* minimum dimensions at level of mounting plate support

| Type | | CA-140 | CA-150 |
|---|---|---|---|
| Weight | (g) | 280 | 435 |
| External dimensions | (mm) | 75 x 80 x 57 | 125 x 80 x 57 |
| **Complete enclosures** | | **Part number** | **Part number** |
| Coated, with gasket and lid screws | | **114.0.0000.00** ● | **115.0.0000.00** ● |
| Coated, with gasket and hex. socket head screws | | – | – |
| Coated, with silicone gasket and lid screws | | **114.0.0860.00** | **115.0.0090.00** |
| Coated, with HF gasket and lid screws | | **114.0.0080.00** | **115.0.0080.00** |
| Saltwater-proof coating, with gasket and lid screws | | **114.0.0100.00** | **115.0.0100.00** |
| Saltwater-proof coating, passivated, lid screws with gasket | | **114.0.0060.00** | **115.0.0060.00** |
| Unwashed, unpainted, no accessories | | **114.0.0800.00** | **115.0.0190.00** |
| **Accessories** (separate or as a mounting set) | | | |
| Mounting plate | | **951.1.0040.00** ● | **982.3.0160.00** ● |
| TS 15 mounting rail | | **982.0.0350.00** ● | **982.0.0100.00** ● |
| TS 32 mounting rail | | – | – |
| TS 35 mounting rail | | – | – |
| Grounding rail | | – | – |
| External attachment brackets | | – | – |
| External hinges side | | **980.1.0440.00** ● | **980.1.0440.00** ● |
| Internal hinges with lid guiding** | | – | – |
| Silicone gasket for wider temperature range (piece goods) | | **923.1.0050.00** ● | **923.1.0050.00** ● |

**Max. Pg threads**

| ISO M | 12 | 16 | 20 | 25 | 32 | 40 | 50 | 63 |
|---|---|---|---|---|---|---|---|---|
| Side A/B | 5 | 2 | 1 | 1 | 0 | 0 | 0 | 0 |
| Side C/D | 3 | 2 | 1 | 1 | 0 | 0 | 0 | 0 |

** mechanical enclosure machining required

● = kept in stock

| ISO M | 12 | 16 | 20 | 25 | 32 | 40 | 50 | 63 |
|---|---|---|---|---|---|---|---|---|
| Side A/B | 10 | 4 | 3 | 2 | 0 | 0 | 0 | 0 |
| Side C/D | 3 | 2 | 1 | 0 | 0 | 0 | 0 | 0 |

** mechanical enclosure machining required

● = kept in stock

## 125 x 80 x 57 mm

CA-160
Aluminium enclosure

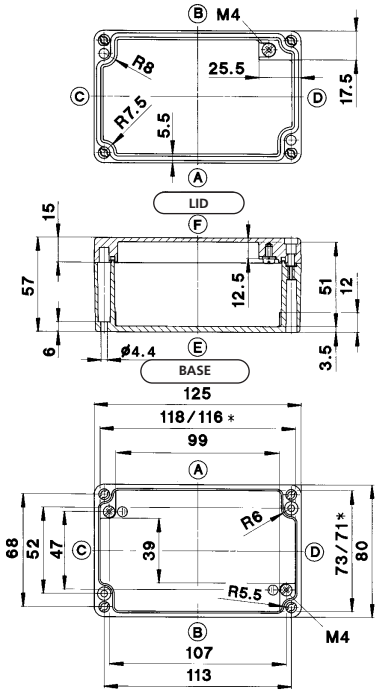


* minimum dimensions at level of mounting plate support

| CA-160 |
|---|
| 435 |
| 125 x 80 x 57 |
| **Part number** |
| **116.0.0000.00** ● |
| – |
| **116.0.1380.00** |
| **116.0.0080.00** |
| **116.0.0100.00** |
| **116.0.0060.00** |
| **116.0.0450.00** |
| |
| **951.1.0050.00** ● |
| **982.0.0360.00** ● |
| – |
| – |
| – |
| – |
| **980.1.0440.00** ● |
| – |
| **923.1.0050.00** ● |
| |

| ISO M | 12 | 16 | 20 | 25 | 32 | 40 | 50 | 63 |
|---|---|---|---|---|---|---|---|---|
| Side A/B | 10 | 4 | 3 | 2 | 0 | 0 | 0 | 0 |
| Side C/D | 4 | 2 | 1 | 1 | 0 | 0 | 0 | 0 |

** mechanical enclosure machining required

● = kept in stock

## 175 x 80 x 57 mm

CA-170
Aluminium enclosure

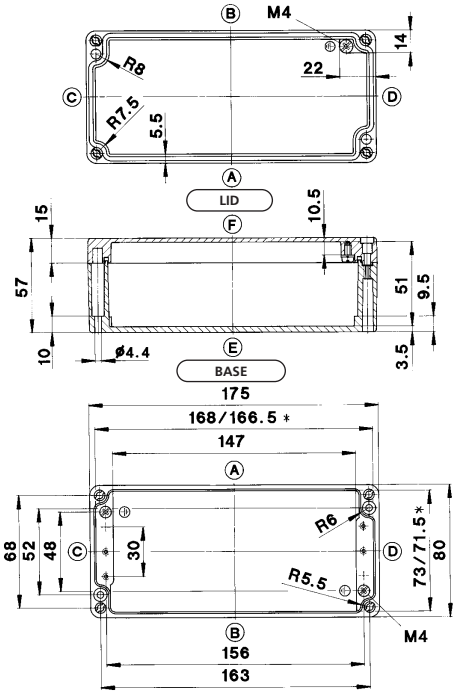


* minimum dimensions at level of mounting plate support

| CA-170 |
|---|
| 530 |
| 175 x 80 x 57 |
| **Part number** |
| **117.0.0000.00** ● |
| – |
| **117.0.0090.00** |
| **117.0.0080.00** |
| **117.0.0100.00** |
| **117.0.0060.00** |
| **117.0.0160.00** |
| |
| **982.3.0170.00** ● |
| **982.0.0140.00** ● |
| – |
| – |
| – |
| – |
| **980.1.0440.00** ● |
| – |
| **923.1.0050.00** ● |
| |

| ISO M | 12 | 16 | 20 | 25 | 32 | 40 | 50 | 63 |
|---|---|---|---|---|---|---|---|---|
| Side A/B | 14 | 6 | 4 | 4 | 0 | 0 | 0 | 0 |
| Side C/D | 3 | 2 | 1 | 0 | 0 | 0 | 0 | 0 |

** mechanical enclosure machining required

● = kept in stock

## 175 x 80 x 57 mm

CA-180
Aluminium enclosure

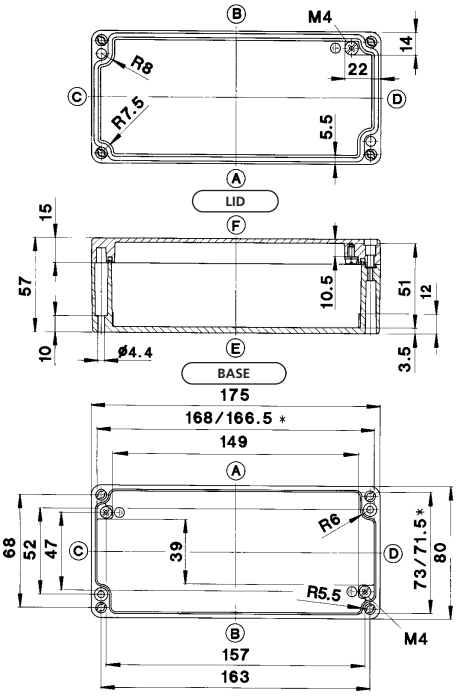


* minimum dimensions at level of mounting plate support

| CA-180 |
|---|
| 530 |
| 175 x 80 x 57 |
| **Part number** |
| **118.0.0000.00** ● |
| – |
| **118.0.0440.00** |
| **118.0.0080.00** |
| **118.0.0100.00** |
| **118.0.0060.00** |
| **118.0.0400.00** |
| |
| **951.1.0060.00** ● |
| **982.0.0370.00** ● |
| – |
| – |
| – |
| – |
| **980.1.0440.00** ● |
| – |
| **923.1.0050.00** ● |
| |

| ISO M | 12 | 16 | 20 | 25 | 32 | 40 | 50 | 63 |
|---|---|---|---|---|---|---|---|---|
| Side A/B | 14 | 6 | 4 | 4 | 0 | 0 | 0 | 0 |
| Side C/D | 4 | 2 | 1 | 1 | 0 | 0 | 0 | 0 |

** mechanical enclosure machining required

● = kept in stock

## 250 x 80 x 57 mm

CA-190
Aluminium enclosure

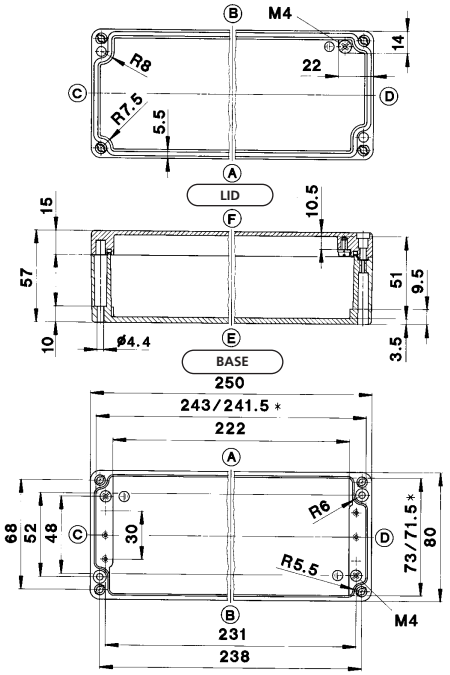


* minimum dimensions at level of mounting plate support

## 122 x 122 x 80 mm

CA-210
Aluminium enclosure

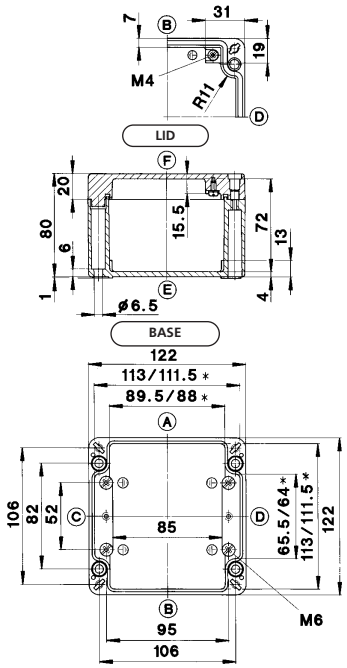


* minimum dimensions at level of mounting plate support

| Type | | CA-190 | CA-210 |
|---|---|---|---|
| Weight | (g) | 710 | 940 |
| External dimensions | (mm) | 250 x 80 x 57 | 122 x 122 x 80 |
| **Complete enclosures** | | **Part number** | **Part number** |
| Coated, with gasket and lid screws | | **119.0.0000.00** ● | **121.0.0000.00** ● |
| Coated, with gasket and hex. socket head screws | | – | **121.0.0010.00** |
| Coated, with silicone gasket and lid screws | | **119.0.0480.00** | **121.0.0150.00** |
| Coated, with HF gasket and lid screws | | **119.0.0080.00** | **121.0.0080.00** |
| Saltwater-proof coating, with gasket and lid screws | | **119.0.0100.00** | **121.0.0100.00** |
| Saltwater-proof coating, passivated, lid screws with gasket | | **119.0.0060.00** | **121.0.0060.00** |
| Unwashed, unpainted, no accessories | | **119.0.0260.00** | **121.0.0160.00** |
| **Accessories** (separate or as a mounting set) | | | |
| Mounting plate | | **982.3.0210.00** ● | **951.1.1500.00** ● |
| TS 15 mounting rail | | **982.0.0190.00** ● | – |
| TS 32 mounting rail | | – | **982.1.0000.00** ● |
| TS 35 mounting rail | | – | **982.2.0010.00** |
| Grounding rail | | – | **981.0.0020.00** |
| External attachment brackets | | – | **982.4.0240.00** ● |
| External hinges side | | **980.1.0440.00** ● | **980.1.0470.00** ● |
| Internal hinges with lid guiding** | | – | **980.1.0310.00** |
| Silicone gasket for wider temperature range (piece goods) | | **923.1.0050.00** ● | **923.1.0060.00** ● |

**Max. Pg threads**

| ISO M | 12 | 16 | 20 | 25 | 32 | 40 | 50 | 63 |
|---|---|---|---|---|---|---|---|---|
| Side A/B | 22 | 9 | 7 | 5 | 0 | 0 | 0 | 0 |
| Side C/D | 3 | 2 | 1 | 0 | 0 | 0 | 0 | 0 |

** mechanical enclosure machining required

● = kept in stock

| ISO M | 12 | 16 | 20 | 25 | 32 | 40 | 50 | 63 |
|---|---|---|---|---|---|---|---|---|
| Side A/B | 12 | 6 | 4 | 2 | 2 | 0 | 0 | 0 |
| Side C/D | 5 | 2 | 2 | 1 | 0 | 0 | 0 | 0 |

** mechanical enclosure machining required

● = kept in stock

## 122 x 122 x 90 mm

CA-215
Aluminium enclosure

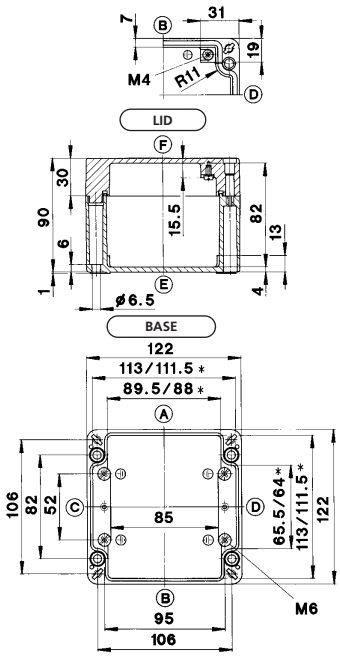


* minimum dimensions at level of mounting plate support

| CA-215 |
|---|
| 920 |
| 122 x 122 x 90 |
| **Part number** |
| **121.0.0000.50** ● |
| **121.0.0010.50** |
| **121.0.0110.50** |
| **121.0.0080.50** |
| **121.0.0100.50** |
| **121.0.0060.50** |
| **121.0.0120.50** |
| |
| **951.1.1500.00** ● |
| – |
| **982.1.0000.00** ● |
| **982.2.0010.00** ● |
| **981.0.0020.00** ● |
| **982.4.0240.00** ● |
| **980.1.0470.00** ● |
| **980.1.0310.00** ● |
| **923.1.0060.00** ● |

| ISO M | 12 | 16 | 20 | 25 | 32 | 40 | 50 | 63 |
|---|---|---|---|---|---|---|---|---|
| Side A/B | 12 | 6 | 4 | 2 | 2 | 0 | 0 | 0 |
| Side C/D | 5 | 2 | 2 | 1 | 0 | 0 | 0 | 0 |

** mechanical enclosure machining required

● = kept in stock

## 122 x 122 x 80 mm

CA-220
Aluminium enclosure

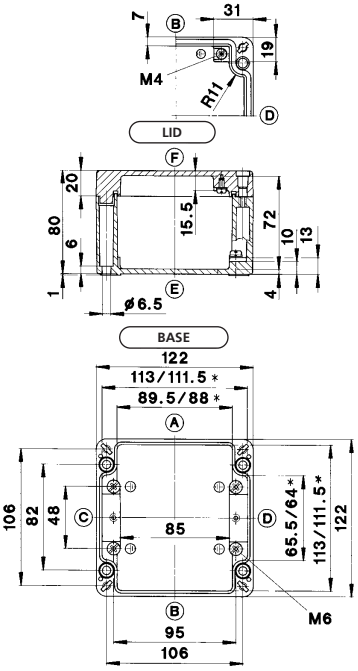


* minimum dimensions at level of mounting plate support

| CA-220 |
|---|
| 940 |
| 122 x 122 x 80 |
| **Part number** |
| **122.0.0000.00** ● |
| **122.0.0010.00** |
| **122.0.0270.00** |
| **122.0.0080.00** |
| **122.0.0100.00** |
| **122.0.0060.00** |
| **122.0.0610.00** |
| |
| **951.1.0080.00** ● |
| – |
| **982.1.0000.00** ● |
| **982.2.0010.00** ● |
| **981.0.0020.00** ● |
| **982.4.0240.00** ● |
| **980.1.0470.00** ● |
| **980.1.0310.00** |
| **923.1.0060.00** ● |

| ISO M | 12 | 16 | 20 | 25 | 32 | 40 | 50 | 63 |
|---|---|---|---|---|---|---|---|---|
| Side A/B | 12 | 6 | 4 | 2 | 2 | 0 | 0 | 0 |
| Side C/D | 5 | 2 | 2 | 1 | 0 | 0 | 0 | 0 |

** mechanical enclosure machining required

● = kept in stock

## 220 x 122 x 80 mm

CA-230
Aluminium enclosure

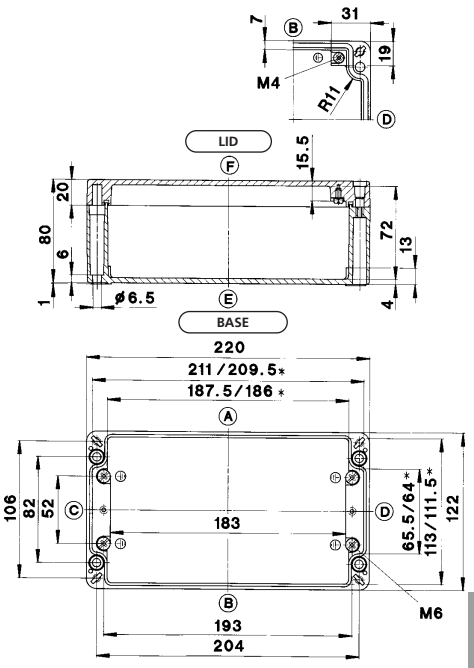


* minimum dimensions at level of mounting plate support

| CA-230 |
|---|
| 1410 |
| 220 x 122 x 80 |
| **Part number** |
| **123.0.0000.00** ● |
| **123.0.0010.00** |
| **123.0.0160.00** |
| **123.0.0080.00** |
| **123.0.0100.00** |
| **123.0.0060.00** |
| **123.0.0150.00** |
| |
| **951.1.0950.00** ● |
| – |
| **982.1.0050.00** ● |
| **982.2.0070.00** ● |
| **981.0.0080.00** ● |
| **982.4.0240.00** ● |
| **980.1.0470.00** ● |
| **980.1.0310.00** |
| **923.1.0060.00** ● |

| ISO M | 12 | 16 | 20 | 25 | 32 | 40 | 50 | 63 |
|---|---|---|---|---|---|---|---|---|
| Side A/B | 27 | 12 | 8 | 5 | 4 | 0 | 0 | 0 |
| Side C/D | 5 | 2 | 2 | 1 | 0 | 0 | 0 | 0 |

** mechanical enclosure machining required

● = kept in stock

## 220 x 122 x 90 mm

CA-235
Aluminium enclosure

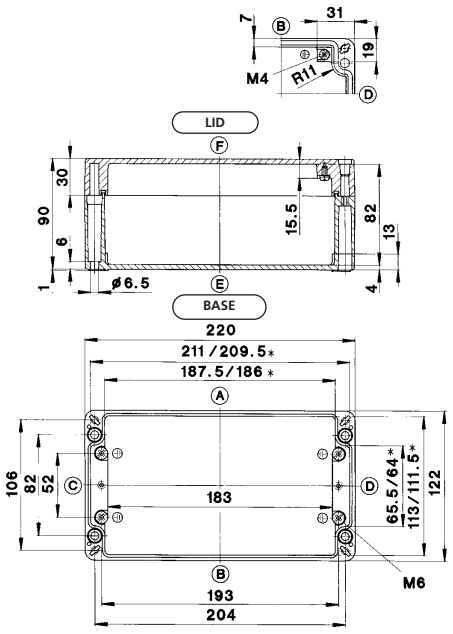


* minimum dimensions at level of mounting plate support

| Type | CA-235 |
|---|---|
| Weight (g) | 1410 |
| External dimensions (mm) | 220 x 122 x 90 |
| **Complete enclosures** | **Part number** |
| Coated, with gasket and lid screws | **123.0.0000.50** ● |
| Coated, with gasket and hex. socket head screws | **123.0.0010.50** |
| Coated, with silicone gasket and lid screws | **123.0.0110.50** |
| Coated, with HF gasket and lid screws | **123.0.0080.50** |
| Saltwater-proof coating, with gasket and lid screws | **123.0.0100.50** |
| Saltwater-proof coating, passivated, lid screws with gasket | **123.0.0060.50** |
| Unwashed, unpainted, no accessories | **123.0.0120.50** |
| **Accessories** (separate or as a mounting set) | |
| Mounting plate | **951.1.0950.00** ● |
| TS 15 mounting rail | – |
| TS 32 mounting rail | **982.1.0050.00** ● |
| TS 35 mounting rail | **982.2.0070.00** ● |
| Grounding rail | **981.0.0080.00** ● |
| External attachment brackets | **982.4.0240.00** ● |
| External hinges side | **980.1.0470.00** ● |
| Internal hinges with lid guiding** | **980.1.0310.00** ● |
| Silicone gasket for wider temperature range (piece goods) | **923.1.0060.00** ● |

**Max. Pg threads**

| ISO M | 12 | 16 | 20 | 25 | 32 | 40 | 50 | 63 |
|---|---|---|---|---|---|---|---|---|
| Side A/B | 27 | 12 | 8 | 5 | 4 | 0 | 0 | 0 |
| Side C/D | 5 | 2 | 2 | 1 | 0 | 0 | 0 | 0 |

** mechanical enclosure machining required

● = kept in stock

## 220 x 122 x 80 mm

CA-240
Aluminium enclosure

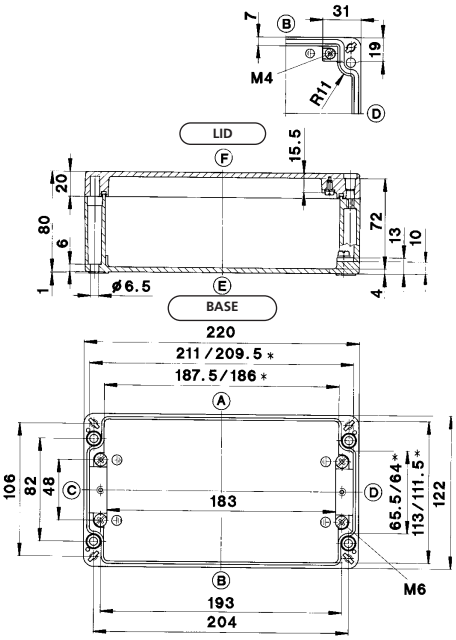


* minimum dimensions at level of mounting plate support

| Type | CA-240 |
|---|---|
| Weight (g) | 1410 |
| External dimensions (mm) | 220 x 122 x 80 |
| **Complete enclosures** | **Part number** |
| Coated, with gasket and lid screws | **124.0.0000.00** ● |
| Coated, with gasket and hex. socket head screws | **124.0.0010.00** |
| Coated, with silicone gasket and lid screws | **124.0.0970.00** |
| Coated, with HF gasket and lid screws | **124.0.0080.00** |
| Saltwater-proof coating, with gasket and lid screws | **124.0.0100.00** |
| Saltwater-proof coating, passivated, lid screws with gasket | **124.0.0060.00** |
| Unwashed, unpainted, no accessories | **124.0.0820.00** |
| **Accessories** (separate or as a mounting set) | |
| Mounting plate | **951.1.0090.00** ● |
| TS 15 mounting rail | – |
| TS 32 mounting rail | **982.1.0050.00** ● |
| TS 35 mounting rail | **982.2.0070.00** ● |
| Grounding rail | **981.0.0080.00** ● |
| External attachment brackets | **982.0.0240.00** ● |
| External hinges side | **980.1.0470.00** ● |
| Internal hinges with lid guiding** | **980.1.0310.00** ● |
| Silicone gasket for wider temperature range (piece goods) | **923.1.0060.00** ● |

| ISO M | 12 | 16 | 20 | 25 | 32 | 40 | 50 | 63 |
|---|---|---|---|---|---|---|---|---|
| Side A/B | 27 | 12 | 8 | 5 | 4 | 0 | 0 | 0 |
| Side C/D | 5 | 2 | 2 | 1 | 0 | 0 | 0 | 0 |

** mechanical enclosure machining required

● = kept in stock

## 360 x 122 x 80 mm

CA-250
Aluminium enclosure

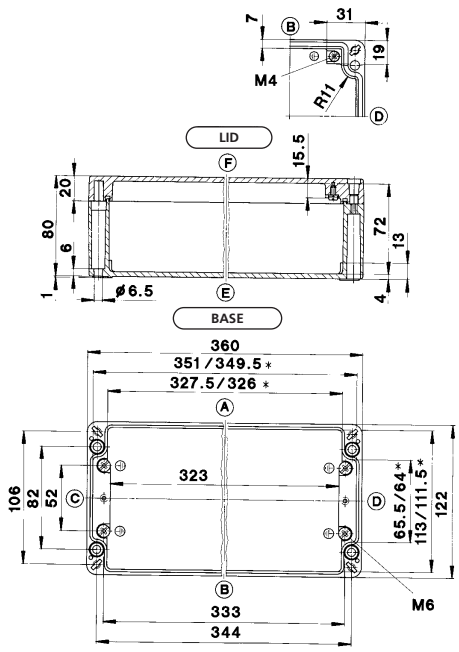


* minimum dimensions at level of mounting plate support

| CA-250 |
|---|
| 1860 |
| 360 x 122 x 80 |
| **Part number** |
| **125.0.0000.00** ● |
| **125.0.0010.00** |
| **125.0.1240.00** |
| **125.0.0080.00** |
| **125.0.0100.00** |
| **125.0.0060.00** |
| **125.0.0110.00** |
| |
| **951.1.1740.00** ● |
| – |
| **982.1.0120.00** ● |
| **982.2.0150.00** ● |
| **981.0.0140.00** ● |
| **982.4.0240.00** ● |
| **980.1.0470.00** ● |
| **980.1.0310.00** ● |
| **923.1.0060.00** ● |

| ISO M | 12 | 16 | 20 | 25 | 32 | 40 | 50 | 63 |
|---|---|---|---|---|---|---|---|---|
| Side A/B | 48 | 21 | 16 | 9 | 6 | 0 | 0 | 0 |
| Side C/D | 5 | 2 | 2 | 1 | 0 | 0 | 0 | 0 |

** mechanical enclosure machining required

● = kept in stock

## 160 x 160 x 90 mm

CA-270
Aluminium enclosure

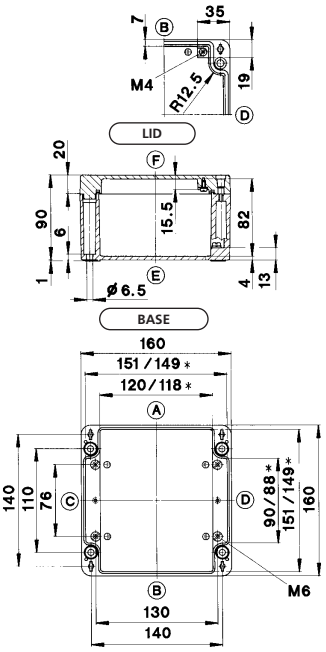


* minimum dimensions at level of mounting plate support

| CA-270 |
|---|
| 1410 |
| 160 x 160 x 90 |
| **Part number** |
| **127.0.0000.00** ● |
| **127.0.0010.00** |
| **127.0.0120.00** |
| **127.0.0080.00** |
| **127.0.0100.00** |
| **127.0.0060.00** |
| **127.0.0130.00** |
| |
| **951.1.1490.00** ● |
| – |
| **982.1.0020.00** ● |
| **982.2.0030.00** ● |
| **981.0.0040.00** ● |
| **982.4.0240.00** ● |
| **980.1.0470.00** ● |
| **980.1.0300.00** ● |
| **923.1.0060.00** ● |

| ISO M | 12 | 16 | 20 | 25 | 32 | 40 | 50 | 63 |
|---|---|---|---|---|---|---|---|---|
| Side A/B | 20 | 9 | 6 | 4 | 2 | 2 | 1 | 0 |
| Side C/D | 8 | 4 | 3 | 2 | 2 | 0 | 0 | 0 |

** mechanical enclosure machining required

● = kept in stock

## 160 x 160 x 90 mm

CA-280
Aluminium enclosure

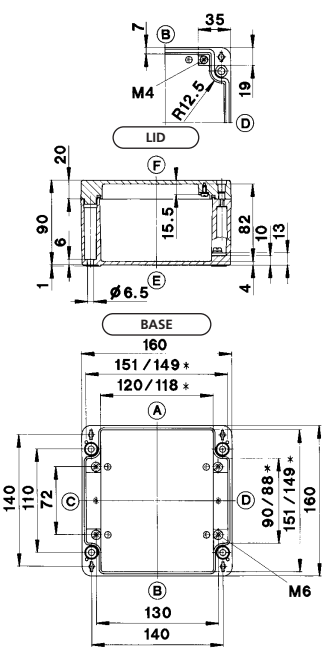


* minimum dimensions at level of mounting plate support

| CA-280 |
|---|
| 1410 |
| 160 x 160 x 90 |
| **Part number** |
| **128.0.0000.00** ● |
| **128.0.0010.00** |
| **128.0.0590.00** |
| **128.0.0080.00** |
| **128.0.0100.00** |
| **128.0.0060.00** |
| **128.0.0330.00** |
| |
| **951.1.0110.00** ● |
| – |
| **982.1.0020.00** ● |
| **982.2.0030.00** ● |
| **981.0.0040.00** ● |
| **982.4.0240.00** ● |
| **980.1.0470.00** ● |
| **980.1.0300.00** ● |
| **923.1.0060.00** ● |

| ISO M | 12 | 16 | 20 | 25 | 32 | 40 | 50 | 63 |
|---|---|---|---|---|---|---|---|---|
| Side A/B | 20 | 9 | 6 | 4 | 2 | 2 | 1 | 0 |
| Side C/D | 8 | 4 | 3 | 2 | 2 | 0 | 0 | 0 |

** mechanical enclosure machining required

● = kept in stock

## 260 x 160 x 90 mm

CA-290
Aluminium enclosure

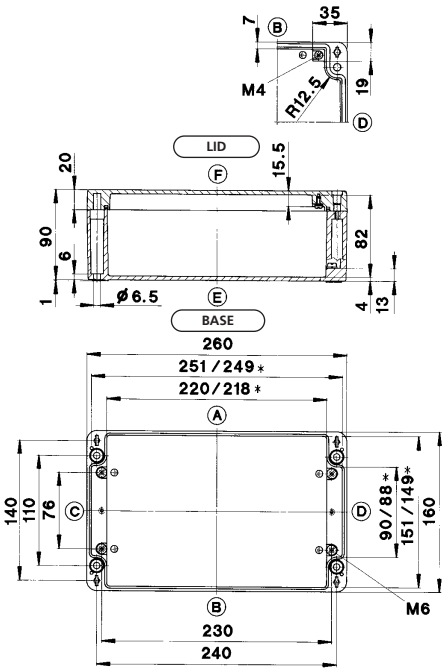


* minimum dimensions at level of mounting plate support

| Type | CA-290 |
|---|---|
| Weight (g) | 1960 |
| External dimensions (mm) | 260 x 160 x 90 |
| **Complete enclosures** | **Part number** |
| Coated, with gasket and lid screws | **129.0.0000.00** ● |
| Coated, with gasket and hex. socket head screws | **129.0.0010.00** |
| Coated, with silicone gasket and lid screws | **129.0.0470.00** |
| Coated, with HF gasket and lid screws | **129.0.0080.00** |
| Saltwater-proof coating, with gasket and lid screws | **129.0.0100.00** |
| Saltwater-proof coating, passivated, lid screws with gasket | **129.0.0060.00** |
| Unwashed, unpainted, no accessories | **129.0.0110.00** |
| **Accessories** (separate or as a mounting set) | |
| Mounting plate | **951.1.0960.00** ● |
| TS 15 mounting rail | – |
| TS 32 mounting rail | **982.1.0080.00** ● |
| TS 35 mounting rail | **982.2.0110.00** ● |
| Grounding rail | **981.0.0100.00** ● |
| External attachment brackets | **982.4.0240.00** ● |
| External hinges side | **980.1.0470.00** ● |
| Internal hinges with lid guiding** | **980.1.0300.00** ● |
| Silicone gasket for wider temperature range (piece goods) | **923.1.0060.00** ● |

**Max. Pg threads**

| ISO M | 12 | 16 | 20 | 25 | 32 | 40 | 50 | 63 |
|---|---|---|---|---|---|---|---|---|
| Side A/B | 36 | 17 | 12 | 7 | 4 | 3 | 3 | 0 |
| Side C/D | 8 | 4 | 3 | 2 | 2 | 0 | 0 | 0 |

** mechanical enclosure machining required

● = kept in stock

## 260 x 160 x 90 mm

CA-300
Aluminium enclosure

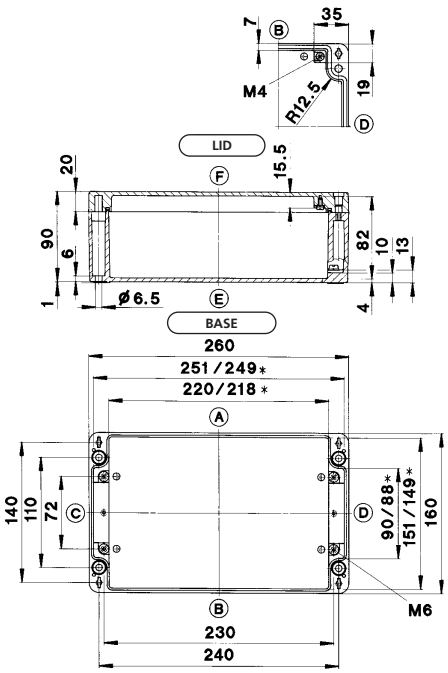


* minimum dimensions at level of mounting plate support

| Type | CA-300 |
|---|---|
| Weight (g) | 1960 |
| External dimensions (mm) | 260 x 160 x 90 |
| **Complete enclosures** | **Part number** |
| Coated, with gasket and lid screws | **130.0.0000.00** ● |
| Coated, with gasket and hex. socket head screws | **130.0.0010.00** |
| Coated, with silicone gasket and lid screws | **130.0.0640.00** |
| Coated, with HF gasket and lid screws | **130.0.0080.00** |
| Saltwater-proof coating, with gasket and lid screws | **130.0.0100.00** |
| Saltwater-proof coating, passivated, lid screws with gasket | **130.0.0060.00** |
| Unwashed, unpainted, no accessories | **130.0.0410.00** |
| **Accessories** (separate or as a mounting set) | |
| Mounting plate | **951.1.0120.00** ● |
| TS 15 mounting rail | – |
| TS 32 mounting rail | **982.1.0080.00** ● |
| TS 35 mounting rail | **982.2.0110.00** ● |
| Grounding rail | **981.0.0100.00** ● |
| External attachment brackets | **982.4.0240.00** ● |
| External hinges side | **980.1.0470.00** ● |
| Internal hinges with lid guiding** | **980.1.0300.00** ● |
| Silicone gasket for wider temperature range (piece goods) | **923.1.0060.00** ● |

| ISO M | 12 | 16 | 20 | 25 | 32 | 40 | 50 | 63 |
|---|---|---|---|---|---|---|---|---|
| Side A/B | 36 | 17 | 12 | 7 | 4 | 3 | 3 | 0 |
| Side C/D | 8 | 4 | 3 | 2 | 2 | 0 | 0 | 0 |

** mechanical enclosure machining required

● = kept in stock

## 360 x 160 x 90 mm

CA-310
Aluminium enclosure

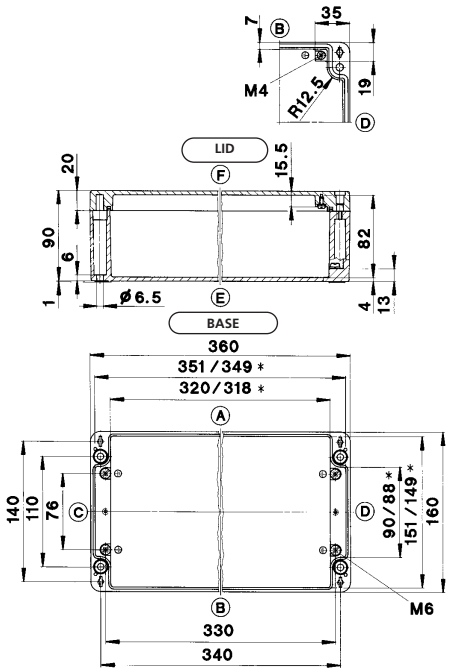


| CA-310 | | | | | | | | |
|---|---|---|---|---|---|---|---|---|
| 2550 | | | | | | | | |
| 360 x 160 x 90 | | | | | | | | |
| **Part number** | | | | | | | | |
| **131.0.0000.00** ● | | | | | | | | |
| **131.0.0010.00** | | | | | | | | |
| **131.0.1580.00** | | | | | | | | |
| **131.0.0080.00** | | | | | | | | |
| **131.0.0100.00** | | | | | | | | |
| **131.0.0060.00** | | | | | | | | |
| **131.0.0710.00** | | | | | | | | |
| | | | | | | | | |
| **951.1.1750.00** ● | | | | | | | | |
| – | | | | | | | | |
| **982.1.0120.00** ● | | | | | | | | |
| **982.2.0150.00** ● | | | | | | | | |
| **981.0.0420.00** ● | | | | | | | | |
| **982.4.0240.00** ● | | | | | | | | |
| **980.1.0470.00** ● | | | | | | | | |
| **980.1.0300.00** ● | | | | | | | | |
| **923.1.0060.00** ● | | | | | | | | |

| ISO M | 12 | 16 | 20 | 25 | 32 | 40 | 50 | 63 |
|---|---|---|---|---|---|---|---|---|
| Side A/B | 54 | 26 | 18 | 11 | 6 | 5 | 4 | 0 |
| Side C/D | 8 | 4 | 3 | 2 | 2 | 0 | 0 | 0 |

** mechanical enclosure machining required

● = kept in stock

## 560 x 160 x 90 mm

CA-330
Aluminium enclosure

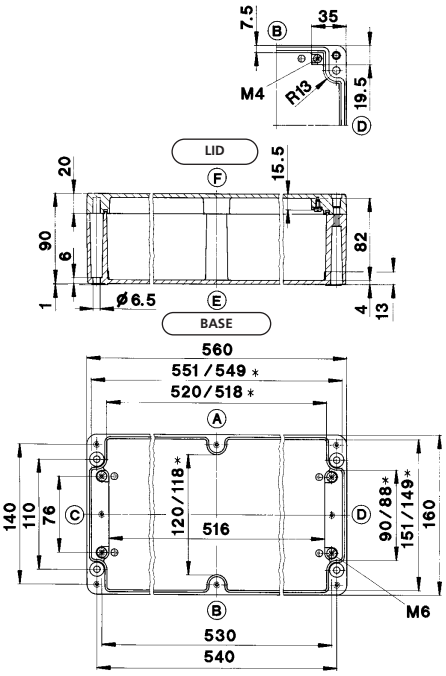


| CA-330 | | | | | | | | |
|---|---|---|---|---|---|---|---|---|
| 4310 | | | | | | | | |
| 560 x 160 x 90 | | | | | | | | |
| **Part number** | | | | | | | | |
| **133.0.0000.00** ● | | | | | | | | |
| **133.0.0010.00** | | | | | | | | |
| **133.0.0560.00** | | | | | | | | |
| **133.0.0080.00** | | | | | | | | |
| **133.0.0100.00** | | | | | | | | |
| **133.0.0060.00** | | | | | | | | |
| **133.0.0220.00** | | | | | | | | |
| | | | | | | | | |
| **951.1.0140.00** ● | | | | | | | | |
| – | | | | | | | | |
| **982.1.0150.00** ● | | | | | | | | |
| **982.2.0180.00** ● | | | | | | | | |
| **981.0.0160.00** ● | | | | | | | | |
| **982.4.0240.00** ● | | | | | | | | |
| **980.1.0470.00** ● | | | | | | | | |
| **980.1.0300.00** ● | | | | | | | | |
| **923.1.0090.00** ● | | | | | | | | |

| ISO M | 12 | 16 | 20 | 25 | 32 | 40 | 50 | 63 |
|---|---|---|---|---|---|---|---|---|
| Side A/B | 84 | 40 | 28 | 16 | 10 | 8 | 6 | 0 |
| Side C/D | 8 | 4 | 3 | 2 | 2 | 0 | 0 | 0 |

** mechanical enclosure machining required

● = kept in stock

## 200 x 230 x 110 mm

CA-350
Aluminium enclosure

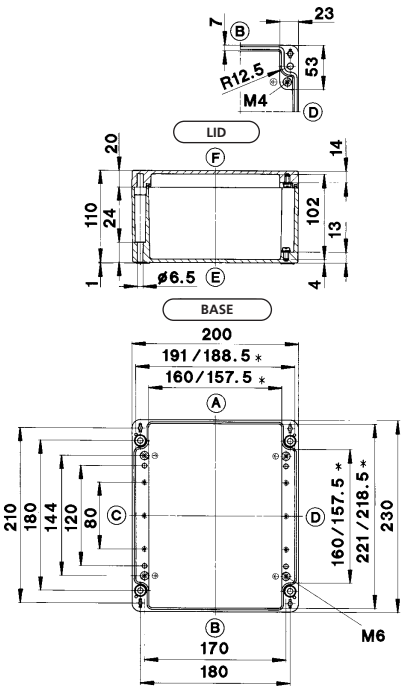


| CA-350 | | | | | | | | |
|---|---|---|---|---|---|---|---|---|
| 2730 | | | | | | | | |
| 200 x 230 x 110 | | | | | | | | |
| **Part number** | | | | | | | | |
| **135.0.0000.00** ● | | | | | | | | |
| **135.0.0010.00** | | | | | | | | |
| **135.0.0780.00** | | | | | | | | |
| **135.0.0080.00** | | | | | | | | |
| **135.0.0100.00** | | | | | | | | |
| **135.0.0060.00** | | | | | | | | |
| **135.0.0170.00** | | | | | | | | |
| | | | | | | | | |
| **951.1.0150.00** ● | | | | | | | | |
| – | | | | | | | | |
| **982.1.0030.00** ● | | | | | | | | |
| **982.2.0050.00** ● | | | | | | | | |
| **981.0.0070.00** ● | | | | | | | | |
| **982.4.0230.00** ● | | | | | | | | |
| **980.1.0470.00** ● | | | | | | | | |
| **980.1.0300.00** ● | | | | | | | | |
| **923.1.0060.00** ● | | | | | | | | |

| ISO M | 12 | 16 | 20 | 25 | 32 | 40 | 50 | 63 |
|---|---|---|---|---|---|---|---|---|
| Side A/B | 35 | 15 | 12 | 8 | 4 | 3 | 2 | 2 |
| Side C/D | 26 | 12 | 8 | 5 | 3 | 2 | 2 | 1 |

** mechanical enclosure machining required

● = kept in stock

## 200 x 230 x 180 mm

CA-360
Aluminium enclosure

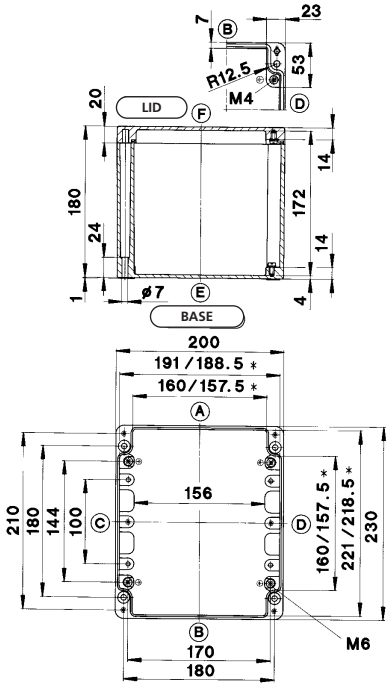


* minimum dimensions at level of mounting plate support

## 280 x 230 x 110 mm

CA-370
Aluminium enclosure

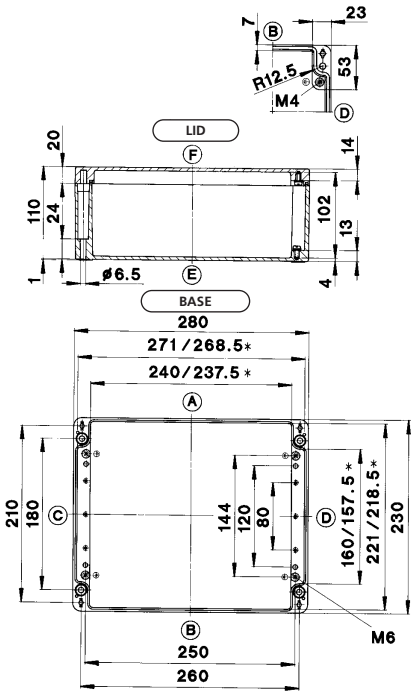


* minimum dimensions at level of mounting plate support

| Type | | CA-360 | CA-370 |
|---|---|---|---|
| Weight | (g) | 3680 | 3840 |
| External dimensions | (mm) | 200 x 230 x 180 | 280 x 230 x 110 |
| **Complete enclosures** | | **Part number** | **Part number** |
| Coated, with gasket and lid screws | | **136.0.0000.00** ● | **137.0.0000.00** ● |
| Coated, with gasket and hex. socket head screws | | **136.0.0010.00** | **137.0.0010.00** |
| Coated, with silicone gasket and lid screws | | **136.0.0440.00** | **137.0.0730.00** |
| Coated, with HF gasket and lid screws | | **136.0.0080.00** | **137.0.0080.00** |
| Saltwater-proof coating, with gasket and lid screws | | **136.0.0100.00** | **137.0.0100.00** |
| Saltwater-proof coating, passivated, lid screws with gasket | | **136.0.0060.00** | **137.0.0060.00** |
| Unwashed, unpainted, no accessories | | **136.0.0430.00** | **137.0.0150.00** |
| **Accessories** (separate or as a mounting set) | | | |
| Mounting plate | | **951.1.0150.00** ● | **951.1.0160.00** ● |
| TS 15 mounting rail | | – | – |
| TS 32 mounting rail | | **982.1.0030.00** ● | **982.1.0090.00** ● |
| TS 35 mounting rail | | **982.2.0050.00** ● | **982.2.0120.00** ● |
| Grounding rail | | **981.0.0070.00** ● | **981.0.0110.00** ● |
| External attachment brackets | | **982.4.0230.00** ● | **982.4.0230.00** ● |
| External hinges side | | **980.1.0470.00** ● | **980.1.0470.00** ● |
| Internal hinges with lid guiding** | | **980.1.0300.00** ● | **980.1.0300.00** ● |
| Silicone gasket for wider temperature range (piece goods) | | **923.1.0060.00** ● | **923.1.0060.00** ● |

**Max. Pg threads**

| ISO M | 12 | 16 | 20 | 25 | 32 | 40 | 50 | 63 |
|---|---|---|---|---|---|---|---|---|
| Side A/B | 56 | 32 | 20 | 13 | 9 | 5 | 4 | 4 |
| Side C/D | 52 | 27 | 18 | 12 | 8 | 5 | 3 | 3 |

** mechanical enclosure machining required

● = kept in stock

| ISO M | 12 | 16 | 20 | 25 | 32 | 40 | 50 | 63 |
|---|---|---|---|---|---|---|---|---|
| Side A/B | 53 | 25 | 18 | 11 | 7 | 4 | 3 | 3 |
| Side C/D | 26 | 12 | 8 | 5 | 3 | 2 | 2 | 1 |

** mechanical enclosure machining required

● = kept in stock

## 330 x 230 x 110 mm

CA-380
Aluminium enclosure

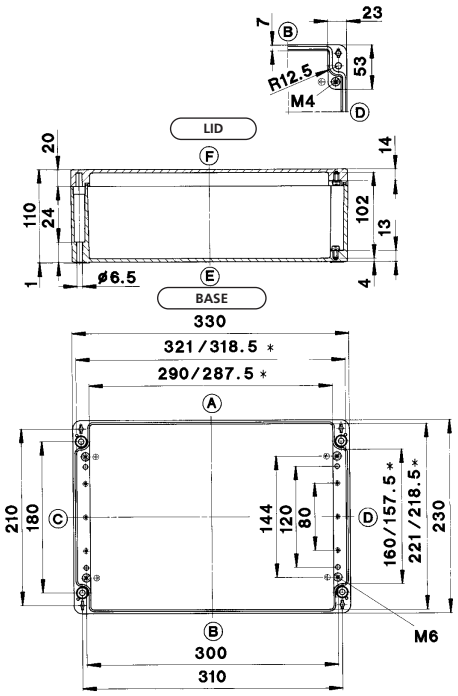


* minimum dimensions at level of mounting plate support

| CA-380 |
|---|
| 4270 |
| 330 x 230 x 110 |
| **Part number** |
| **138.0.0000.00** ● |
| **138.0.0010.00** |
| **138.0.0520.00** |
| **138.0.0080.00** |
| **138.0.0100.00** |
| **138.0.0060.00** |
| **138.0.0140.00** |
| |
| **951.1.0170.00** ● |
| – |
| **982.1.0110.00** ● |
| **982.2.0140.00** ● |
| **981.0.0130.00** ● |
| **982.4.0230.00** ● |
| **980.1.0470.00** ● |
| **980.1.0300.00** ● |
| **923.1.0060.00** ● |

| ISO M | 12 | 16 | 20 | 25 | 32 | 40 | 50 | 63 |
|---|---|---|---|---|---|---|---|---|
| Side A/B | 65 | 30 | 23 | 12 | 9 | 5 | 4 | 3 |
| Side C/D | 24 | 12 | 8 | 5 | 3 | 2 | 2 | 1 |

** mechanical enclosure machining required

● = kept in stock

## 330 x 230 x 180 mm

CA-390
Aluminium enclosure

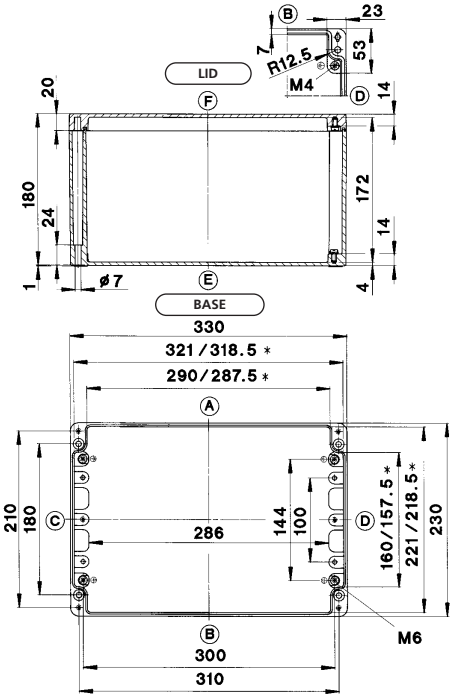


* minimum dimensions at level of mounting plate support

| CA-390 |
|---|
| 5300 |
| 330 x 230 x 180 |
| **Part number** |
| **139.0.0000.00** ● |
| **139.0.0010.00** |
| **139.0.0200.00** |
| **139.0.0080.00** |
| **139.0.0100.00** |
| **139.0.0060.00** |
| **139.0.0120.00** |
| |
| **951.1.0170.00** ● |
| – |
| **982.1.0110.00** ● |
| **982.2.0140.00** ● |
| **981.0.0130.00** ● |
| **982.4.0230.00** ● |
| **980.1.0470.00** ● |
| **980.1.0300.00** ● |
| **923.1.0060.00** ● |

| ISO M | 12 | 16 | 20 | 25 | 32 | 40 | 50 | 63 |
|---|---|---|---|---|---|---|---|---|
| Side A/B | 108 | 54 | 40 | 25 | 15 | 9 | 8 | 6 |
| Side C/D | 52 | 27 | 18 | 12 | 8 | 5 | 3 | 3 |

** mechanical enclosure machining required

● = kept in stock

## 400 x 230 x 110 mm

CA-400
Aluminium enclosure

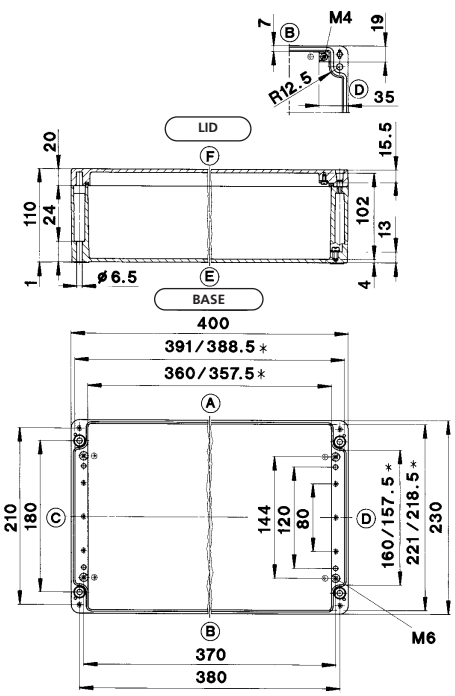


* minimum dimensions at level of mounting plate support

| CA-400 |
|---|
| 4870 |
| 400 x 230 x 110 |
| **Part number** |
| **140.0.0000.00** ● |
| **140.0.0010.00** |
| **140.0.0620.00** |
| **140.0.0080.00** |
| **140.0.0100.00** |
| **140.0.0060.00** |
| **140.0.0130.00** |
| |
| **951.1.2940.00** ● |
| – |
| **982.1.0140.00** ● |
| **982.2.0170.00** ● |
| **981.0.0150.00** ● |
| **982.4.0230.00** ● |
| **980.1.0470.00** ● |
| **980.1.0300.00** ● |
| **923.1.0060.00** ● |

| ISO M | 12 | 16 | 20 | 25 | 32 | 40 | 50 | 63 |
|---|---|---|---|---|---|---|---|---|
| Side A/B | 80 | 38 | 27 | 17 | 11 | 6 | 5 | 4 |
| Side C/D | 26 | 12 | 8 | 5 | 3 | 2 | 2 | 1 |

** mechanical enclosure machining required

● = kept in stock

## 600 x 230 x 110 mm

CA-420
Aluminium enclosure

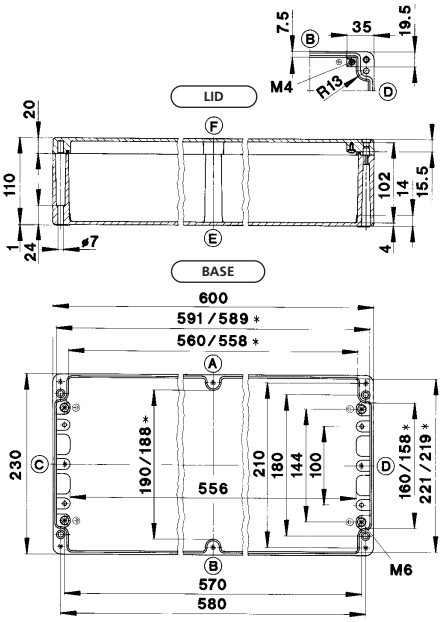


* minimum dimensions at level of mounting plate support

| Type | CA-420 |
|---|---|
| Weight (g) | 6380 |
| External dimensions (mm) | 600 x 230 x 110 |
| **Complete enclosures** | **Part number** |
| Coated, with gasket and lid screws | **142.0.0000.00** ● |
| Coated, with gasket and hex. socket head screws | **142.0.0010.00** |
| Coated, with silicone gasket and lid screws | **142.0.0550.00** |
| Coated, with HF gasket and lid screws | **142.0.0080.00** |
| Saltwater-proof coating, with gasket and lid screws | **142.0.0100.00** |
| Saltwater-proof coating, passivated, lid screws with gasket | **142.0.0060.00** |
| Unwashed, unpainted, no accessories | **142.0.0110.00** |
| **Accessories** (separate or as a mounting set) | |
| Mounting plate | **951.1.0190.00** ● |
| TS 15 mounting rail | – |
| TS 32 mounting rail | **982.1.0160.00** ● |
| TS 35 mounting rail | **982.2.0190.00** ● |
| Grounding rail | **981.0.0170.00** ● |
| External attachment brackets | **982.4.0230.00** ● |
| External hinges side | **980.1.0470.00** ● |
| Internal hinges with lid guiding** | **980.1.0300.00** ● |
| Silicone gasket for wider temperature range (piece goods) | **923.1.0060.00** ● |

**Max. Pg threads**

| ISO M | 12 | 16 | 20 | 25 | 32 | 40 | 50 | 63 |
|---|---|---|---|---|---|---|---|---|
| Side A/B | 120 | 56 | 42 | 24 | 16 | 8 | 8 | 6 |
| Side C/D | 28 | 13 | 8 | 5 | 3 | 2 | 2 | 1 |

** mechanical enclosure machining required

● = kept in stock

## 402.5 x 310 x 110 mm

CA-450
Aluminium enclosure

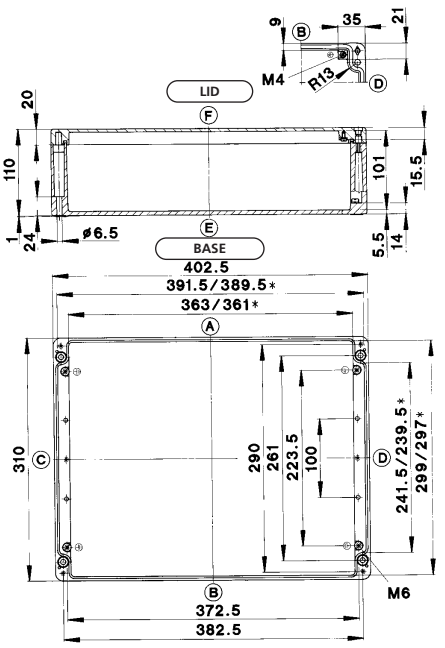


* minimum dimensions at level of mounting plate support

| Type | CA-450 |
|---|---|
| Weight (g) | 5810 |
| External dimensions (mm) | 402.5 x 310 x 110 |
| **Complete enclosures** | **Part number** |
| Coated, with gasket and lid screws | **145.0.0000.00** ● |
| Coated, with gasket and hex. socket head screws | **145.0.0010.00** |
| Coated, with silicone gasket and lid screws | **145.0.0520.00** |
| Coated, with HF gasket and lid screws | **145.0.0080.00** |
| Saltwater-proof coating, with gasket and lid screws | **145.0.0100.00** |
| Saltwater-proof coating, passivated, lid screws with gasket | **145.0.0060.00** |
| Unwashed, unpainted, no accessories | **145.0.0250.00** |
| **Accessories** (separate or as a mounting set) | |
| Mounting plate | **951.1.0200.00** ● |
| TS 15 mounting rail | – |
| TS 32 mounting rail | **982.1.0140.00** ● |
| TS 35 mounting rail | **982.2.0170.00** ● |
| Grounding rail | **981.0.0150.00** ● |
| External attachment brackets | **982.4.0230.00** ● |
| External hinges side | **980.1.0470.00** ● |
| Internal hinges with lid guiding** | **980.1.0300.00** ● |
| Silicone gasket for wider temperature range (piece goods) | **923.1.0090.00** ● |

| ISO M | 12 | 16 | 20 | 25 | 32 | 40 | 50 | 63 |
|---|---|---|---|---|---|---|---|---|
| Side A/B | 80 | 38 | 27 | 17 | 11 | 6 | 5 | 4 |
| Side C/D | 38 | 21 | 13 | 7 | 5 | 4 | 3 | 2 |

** mechanical enclosure machining required

● = kept in stock

## 402.5 x 310 x 180 mm

CA-460
Aluminium enclosure

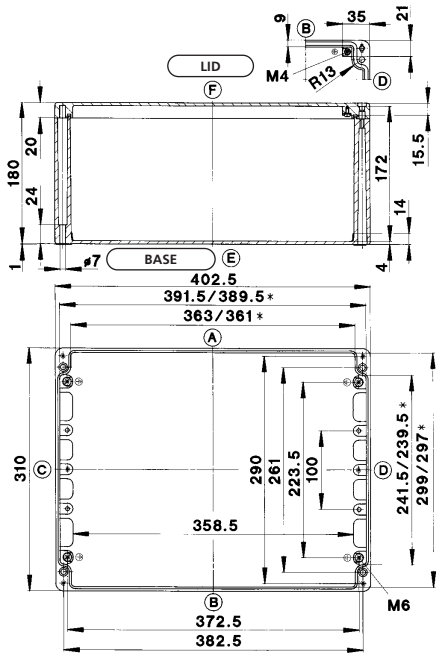


* minimum dimensions at level of mounting plate support

| CA-460 |
|---|
| 7420 |
| 402.5 x 310 x 180 |
| **Part number** |
| **146.0.0000.00** ● |
| **146.0.0010.00** |
| **146.0.0130.00** |
| **146.0.0080.00** |
| **146.0.0100.00** |
| **146.0.0060.00** |
| **146.0.0490.00** |
| |
| **951.1.0200.00** ● |
| – |
| **982.1.0140.00** ● |
| **982.2.0170.00** ● |
| **981.0.0150.00** ● |
| **982.4.0230.00** ● |
| **980.1.0470.00** ● |
| **980.1.0300.00** ● |
| **923.1.0090.00** ● |

| ISO M | 12 | 16 | 20 | 25 | 32 | 40 | 50 | 63 |
|---|---|---|---|---|---|---|---|---|
| Side A/B | 136 | 68 | 50 | 30 | 21 | 12 | 10 | 8 |
| Side C/D | 74 | 38 | 28 | 18 | 12 | 8 | 6 | 3 |

** mechanical enclosure machining required

● = kept in stock

## 600 x 310 x 110 mm

CA-470
Aluminium enclosure

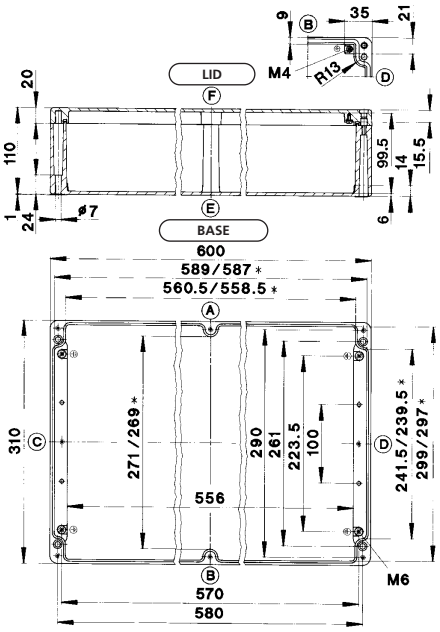


* minimum dimensions at level of mounting plate support

| CA-470 |
|---|
| 8480 |
| 600 x 310 x 110 |
| **Part number** |
| **147.0.0000.00** ● |
| **147.0.0010.00** |
| **147.0.0560.00** |
| **147.0.0080.00** |
| **147.0.0100.00** |
| **147.0.0060.00** |
| **147.0.0620.00** |
| |
| **951.1.0210.00** ● |
| – |
| **982.1.0160.00** ● |
| **982.2.0190.00** ● |
| **981.0.0170.00** ● |
| **982.4.0230.00** ● |
| **980.1.0470.00** ● |
| **980.1.0300.00** ● |
| **923.1.0090.00** ● |

| ISO M | 12 | 16 | 20 | 25 | 32 | 40 | 50 | 63 |
|---|---|---|---|---|---|---|---|---|
| Side A/B | 120 | 56 | 42 | 24 | 16 | 8 | 8 | 6 |
| Side C/D | 38 | 17 | 13 | 7 | 5 | 4 | 3 | 2 |

** mechanical enclosure machining required

● = kept in stock

## 600 x 310 x 180 mm

CA-480
Aluminium enclosure

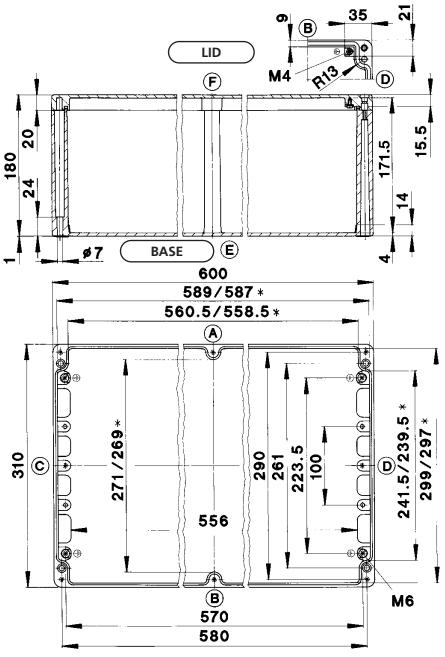


* minimum dimensions at level of mounting plate support

| CA-480 |
|---|
| 10840 |
| 600 x 310 x 180 |
| **Part number** |
| **148.0.0000.00** ● |
| **148.0.0010.00** |
| **148.0.0450.00** |
| **148.0.0080.00** |
| **148.0.0100.00** |
| **148.0.0060.00** |
| **148.0.0170.00** |
| |
| **951.1.0210.00** ● |
| – |
| **982.1.0160.00** ● |
| **982.2.0190.00** ● |
| **981.0.0170.00** ● |
| **982.4.0230.00** ● |
| **980.1.0470.00** ● |
| **980.1.0300.00** ● |
| **923.1.0090.00** ● |

| ISO M | 12 | 16 | 20 | 25 | 32 | 40 | 50 | 63 |
|---|---|---|---|---|---|---|---|---|
| Side A/B | 200 | 100 | 76 | 46 | 30 | 18 | 14 | 12 |
| Side C/D | 74 | 38 | 28 | 18 | 12 | 8 | 6 | 5 |

** mechanical enclosure machining required

● = kept in stock